Koyo®

• General Bearings •

BALL BEARING UNITS

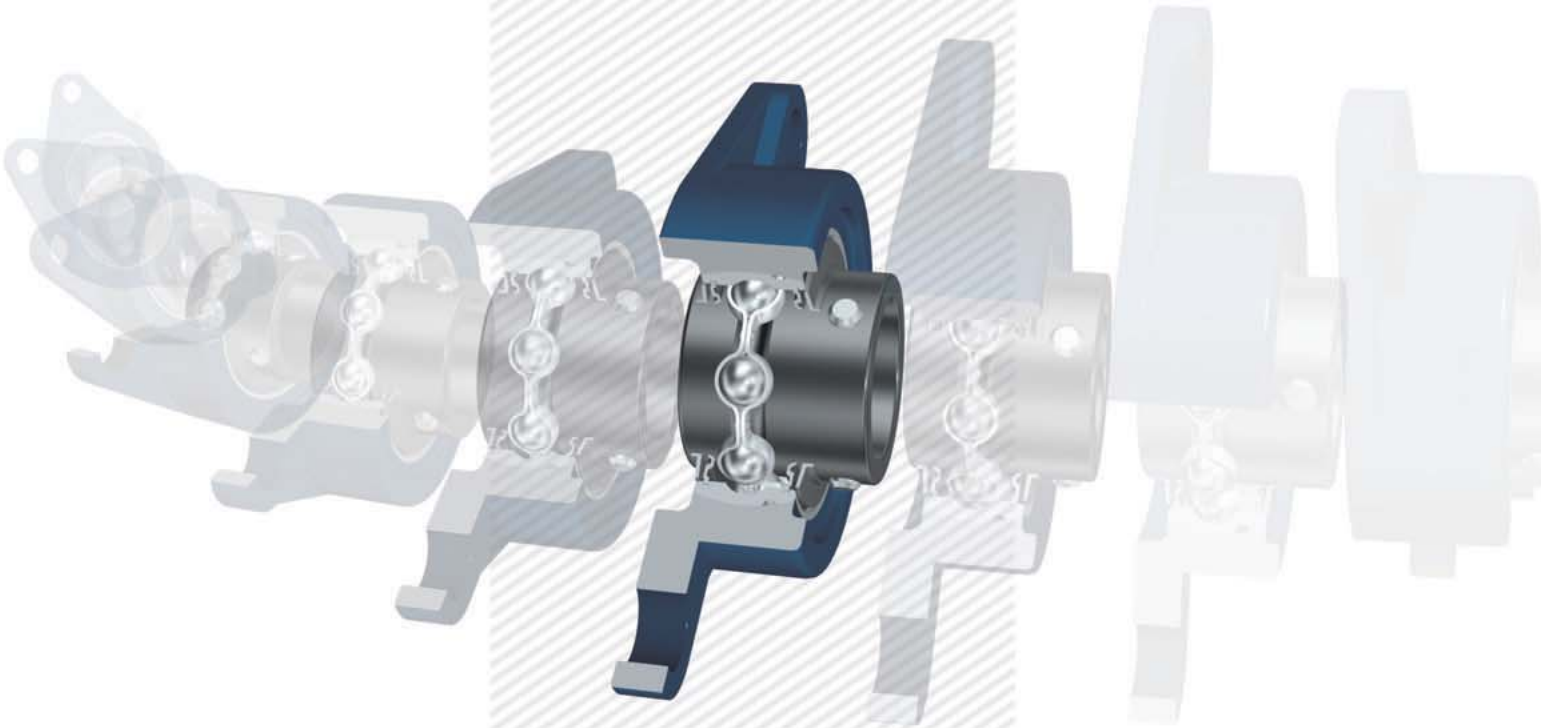

JTEKT

JTEKT CORPORATION

CAT. NO. B2007E

Ball Bearing Units (contents)

Technical section

Appendix table

Koyo®

BALL BEARING UNITS

CAT. NO. B2007E

Value & Technology

Publication of
New Koyo Ball Bearing Units Catalog

In recent years, needs in industrial world for machineries and equipment highly developed in all aspects have been increased more than ever. Therefore, high technology covering from superior technical advantages including longer service life and maintenance free to higher reliability even under extraordinary conditions such as high and low temperatures and rotation at a high speed is required for ball bearing units.

This catalog completely includes results of technical examinations and abundant research and development.

In the first half of this catalog, technical descriptions referring from the selection to the handling of Koyo Ball Bearing units are mentioned, while a lot of dimensional tables with types and dimensions are included in the last half. Varied technical information is provided at the last of this catalog. We trust this catalog will help you to select and use Koyo Ball Bearing units appropriately.

JTEKT keeps trying to get ideas from the market, step up persistent efforts of technical research and development, and provide the best technologies, quality, and services.
JTEKT is grateful for your patronage and look forward to continuing to serve you in the future.

★The contents of this catalog are subject to change without prior notice.
Every possible effort has been made to ensure that the data herein is correct;
however, JTEKT cannot assume responsibility for any errors or omissions.

Contents

Technical section

Unit dimensional table

Parts and accessories

1 Structure and features

Koyo Ball Bearing Units are highly precise bearing units comprising grease sealed deep groove ball bearings and housings in various forms. The ball bearing units allow easy handling and installation by followings: direct installation to machines and equipment with some bolts, self-aligning, and greasing.

1.1 Structure

Koyo Ball Bearing Unit comprises the ball bearing for unit with spherical outside surface and the housing with spherical bearing seat (**Fig. 1.1**).

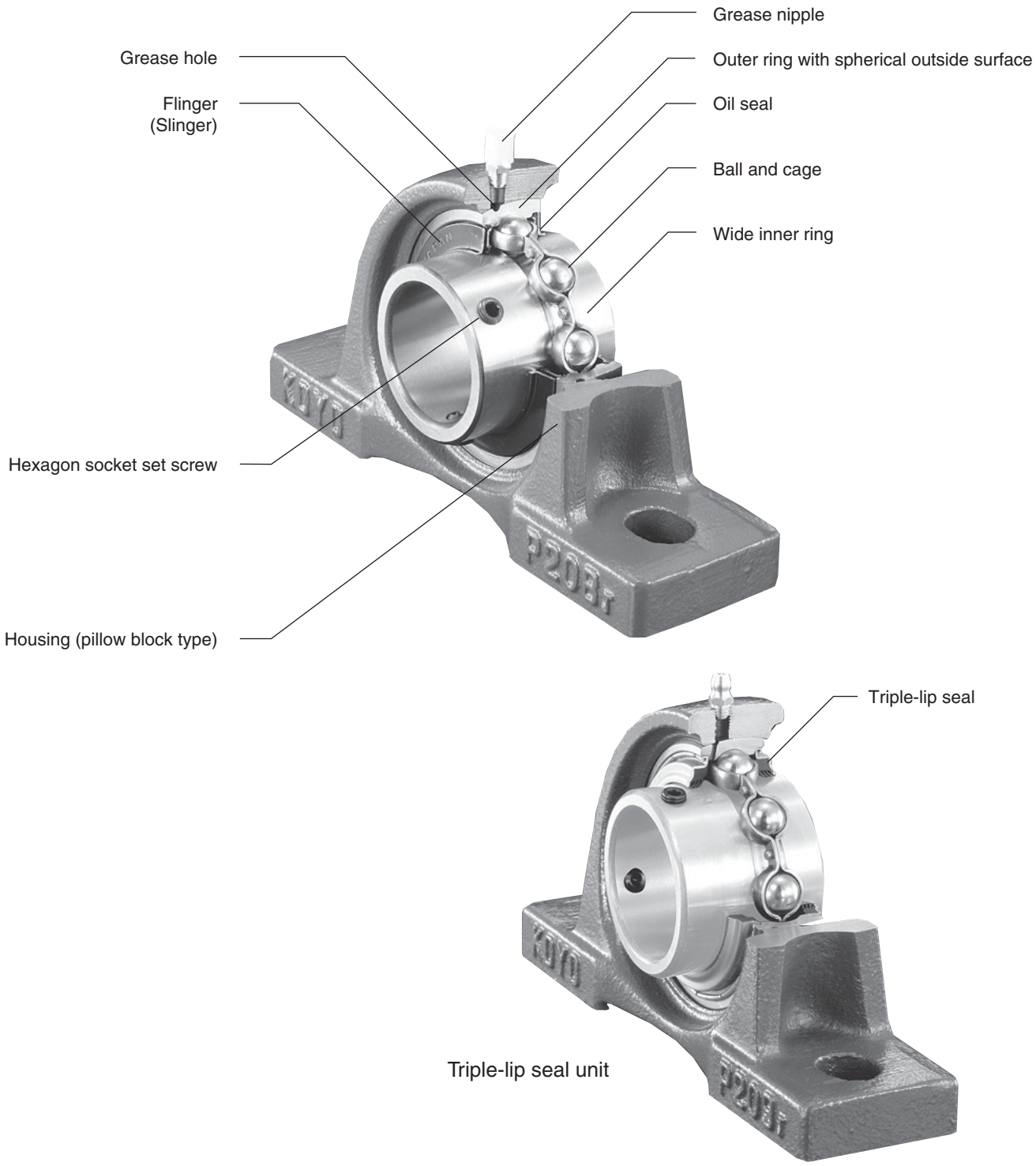

Fig. 1.1 Structure of ball bearing units (representative example)

1.2 Features

Koyo Ball Bearing Units, having many features, are available in various types. Select the bearing unit optimal for your purpose among the types with unique features.

1 Supreme load capacity and accuracy

Koyo Ball Bearings for bearing unit, featuring the internal structure identical to single row deep groove ball bearings, bear axial load in both directions, as well as great radial load. The tolerance is equal to that of an standard bearing. They feature high rotation accuracy and high speed rotation.

2 Rational self aligning mechanism and optimal fit

Koyo Ball Bearing Units have self aligning mechanism by the spherical outside surface bearing and the housing with and spherical bearing seat. Because of this mechanism, deviation of the shaft center caused by warp of the shaft flexion of axis (shaft) or offset is automatically adjusted to eliminate abnormal load onto the bearing, leading to guarantee of original service life of the bearing.

Since the spherical outside surface of the bearing is ground and the spherical bearing seat of the housing is machined by a boring machine with high accuracy, optimal fitting of the bearing and the housing can be obtained, as well as superior aligning performance.

The allowable aligning angle of standard ball bearing unit is 3º, while that of ball bearing unit with cover is 1º.

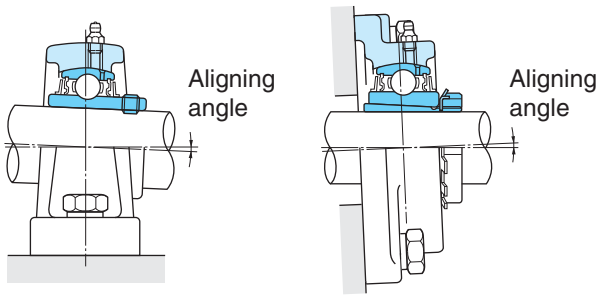

Fig. 1.2 Allowable aligning angle of ball bearing unit

3 Superior sealing performance

Koyo Ball Bearing Units can prevent leak of grease in the bearing to the outside, as well as ingress of dusts and water from the outside into the inside of the bearing by the synergetic effect of the oil seal installed to the outer ring of the bearing and the flinger (slinger) installed to the inner ring of the bearing.

The oil seal is made of synthetic rubber featuring supreme oil proof. Its lip contacts with the inner ring of the bearing with optimal tension (radial load of lip).

When using in environments with many dusts or high humidity, the triple-lip seal unit (supplementary code : L3) or the unit with cover (supplementary code : C, CD, FC, FD) is optimal.

The triple-lip seal unit or unit with cover strongly prevents ingress of water and dusts from the outside, and guarantees a longer service life of the bearing.

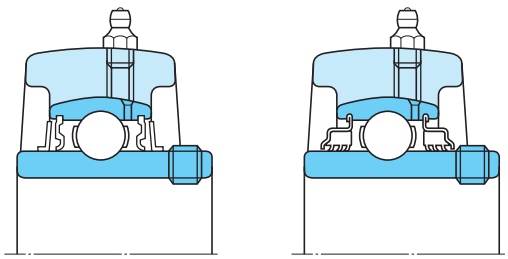

Standard type | **Triple-lip seal type** (Supplementary code : L3)

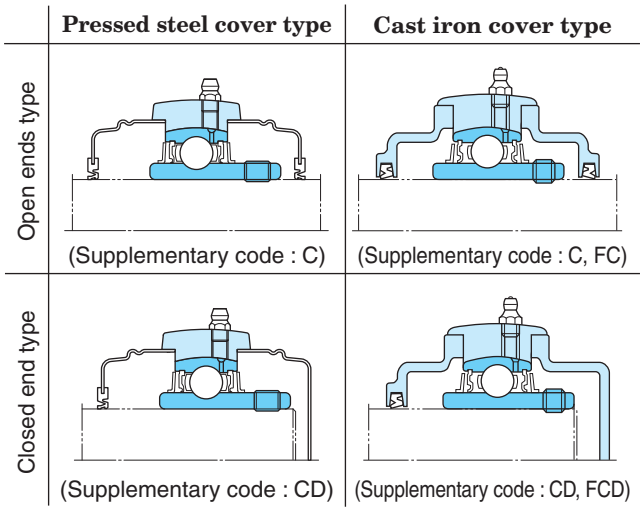

Unit with cover

Fig. 1.3 Sealing mechanism of ball bearing unit

4 Simple greasing

Because of the grease nipple on the housing of Koyo Ball Bearing Unit, fresh grease can be easily supplied to the bearing being operated. If the bearing is used in severe environments that are exposed to many dusts or high humidity or that is high temperture, supply fresh grease at a regular interval. Then, the lubrication status of the bearing is kept to the best, and the service life of the bearing can be extended.

When greasing to the bearing unit with the centralized lubricating system, use the socket for lubricating installed to the grease nipple tapped hole on the housing.

5 Highly rigid and strong housing

Koyo Ball Bearing Unit housing is designed so that it is optimal for reduction of deformation due to centralization of stress and load. After the selection of good material, it is produced by highly advanced casting technique or press working technique.

Since any abnormal load onto the bearing is eliminated by the highly rigid and strong housing, the service life of the bearing can be extended. Baking finish on the surface of the housing keeps good surface status for a long time.

6 Simple installation and handling

Koyo Ball Bearing Units of many types can be installed to any of machine or equipment with some bolts, and can be used in the status as it is. Clearance fit is used for the inner ring of bearing and the shaft, as a rule.

Therefore, Koyo Ball Bearing Unit does not need any work such as filling of lubricant or installation of sealing unit required for standard bearings. As a result, the total of manpower can be drastically reduced.

As for the fixing method of bearing to shaft, three methods, (1) set screw mounted to the cylindrical bore wide inner ring, (2) adapter installed to the tapered bore inner ring, and (3) eccentric locking collar installed to the cylindrical bore wide inner ring are available.

Fixing of bearing to shaft can be executed easily and securely by adopting any of these method.

7 Various types

Koyo Ball Bearing Units are available in various types.

Reliability of machine or equipment used together with the units can be improved by selecting and using bearing units optimal for the purpose and operating conditions.

2 Types

2.1 Type list

Koyo Ball Bearing Units are available in various types.

Table 2.1 and **Table 2.2** show the types of Koyo Ball Bearing Units and ball bearing for unit.

Table 2.1 Koyo Ball Bearing Units types

Type		Bearing bore dia. Surface (fixing to shaft)	Type code	Shaft dia. (inch)	Shaft dia. (mm)	Dimension table
1 Pillow block type	(1) Standard	Cylindrical bore (with set screws)	**UCP**	1/2 – 4	12 – 140	P.72
		Cylindrical bore (with eccentric locking collar)	**NAP**	1/2 – 2 15/16	12 – 75	P.78
			NAPK	1/2 – 2 15/16	12 – 75	P.80
		Tapered bore (with adapter)	**UKP**	3/4 – 4 1/2	20 – 125	P.82
	(2) Cast steel type	Cylindrical bore (with set screws)	**UCP-SC**	7/8 – 4	25 – 140	P.88
		Tapered bore (with adapter)	**UKP-SC**	3/4 – 4 1/2	20 – 125	P.92
	(3) Thick section type	Cylindrical bore (with set screws)	**UCIP**	1 1/2 – 4	40 – 140	P.96
		Tapered bore (with adapter)	**UKIP**	1 1/4 – 4 1/2	35 – 125	P.98
	(4) Tapped-base type	Cylindrical bore (with set screws)	**UCPA**	1/2 – 2	12 – 50	P.100
	(5) Higher centerheight type	Cylindrical bore (with set screws)	**UCPH**	1/2 – 2	12 – 50	P.102
	(6) Light duty type	Cylindrical bore (with set screws)	**BLP**	1/2 – 1 9/16	12 – 40	P.104
		Cylindrical bore (with eccentric locking collar)	**ALP**			
	(7) “Compact” series	Cylindrical bore (with set screws)	**UP**	N/A	10 – 30	P.106
	(8) Stainless-series	Cylindrical bore (with set screws)	**UCSP-H1S6**	N/A	20 – 50	P.108
			UCSPA-H1S6	N/A	20 – 40	P.110
			USP-S6	N/A	10 – 30	P.112
	(9) Pressed steel type	Cylindrical bore (with set screws)	**SBPP**	1/2 – 1 1/4	12 – 30	P.114
		Cylindrical bore (with eccentric locking collar)	**SAPP**			
2 Square-flanged type	(1) Standard	Cylindrical bore (with set screws)	**UCF**	1/2 – 4	12 – 140	P.116
			UCF-E	1/2 – 3 7/16	12 – 85	P.122
		Cylindrical bore (with eccentric locking collar)	**NANF**	1/2 – 2 7/16	12 – 60	P.126
		Tapered bore (with adapter)	**UKF**	3/4 – 4 1/2	20 – 125	P.128
	(2) With spigot joint	Cylindrical bore (with set screws)	**UCFS**	1 – 4	25 – 140	P.134
		Tapered bore (with adapter)	**UKFS**	3/4 – 4 1/2	20 – 125	P.136
	(3) Stainless-series	Cylindrical bore (with set screws)	**UCSF-H1S6**	N/A	20 – 50	P.138
3 Oval flange type	(1) Rhombic-flanged type	Cylindrical bore (with set screws)	**UCFL**	1/2 – 4	12 – 130	P.140
			UCFL-E	1/2 – 3 1/4	12 – 85	P.146
		Cylindrical bore (with eccentric locking collar)	**NANFL**	1/2 – 2 3/16	12 – 55	P.150
		Tapered bore (with adapter)	**UKFL**	3/4 – 4 1/2	20 – 115	P.152
	(2) Adjustable rhombic-flanged type	Cylindrical bore (with set screws)	**UCFA**	1/2 – 2 3/16	12 – 55	P.156
	(3) Three-bolt type	Cylindrical bore (with set screws)	**UCFB**	1/2 – 2	12 – 50	P.158
	(4) Light duty rhombic-flanged type	Cylindrical bore (with set screws)	**BLF**	1/2 – 1 7/16	12 – 35	P.160
		Cylindrical bore (with eccentric locking collar)	**ALF**			
	(5) “Compact” series rhombic-flanged type	Cylindrical bore (with set screws)	**UFL**	N/A	8 – 30	P.162
	(6) Stainless-series rhombic-flanged type	Cylindrical bore (with set screws)	**UCSFL-H1S6**	N/A	20 – 50	P.164
			USFL-S6	N/A	10 – 30	P.166
4 Round-flanged type with spigot joint		Cylindrical bore (with set screws)	**UCFC**	1/2 – 4	12 – 100	P.168
			UCFCX-E	1 – 4	25 – 100	P.172
		Tapered bore (with adapter)	**UKFC**	3/4 – 3 1/2	20 – 90	P.174
5 Pressed steel flange type	(1) Round-flanged type	Cylindrical bore (with set screws)	**SBPF**	1/2 – 1 7/16	12 – 35	P.178
		Cylindrical bore (with eccentric locking collar)	**SAPF**			
	(2) Rhombic-flanged type	Cylindrical bore (with set screws)	**SBPFL**	1/2 – 1 7/16	12 – 35	P.180
		Cylindrical bore (with eccentric locking collar)	**SAPFL**			

Table 2.1 Koyo Ball Bearing Units types (continued)

Type		Bearing bore dia. Surface (fixing to shaft)	Type code	Shaft dia. (inch)	Shaft dia. (mm)	Dimension table
6 Take-up type	(1) Standard	Cylindrical bore (with set screws)	**UCT**	1/2 – 4	12 – 140	P.182
			UCT-E	1/2 – 3 7/16	12 – 85	P.188
		Tapered bore (with adapter)	**UKT**	3/4 – 4 1/2	20 – 125	P.192
	(2) Stainless-series	Cylindrical bore (with set screws)	**UCST-H1S6**	N/A	20 – 50	P.198
	(3) Section steel frame type	Cylindrical bore (with set screws)	**UCTH**	1/2 – 2 1/2	12 – 65	P.200
	(4) Channel steel frame type	Cylindrical bore (with set screws)	**UCTL**	N/A	20 – 45	P.202
			UCTU	N/A	40 – 90	P.204
	(5) Pressed steel frame type	Cylindrical bore (with set screws)	**SBPTH**	N/A	12 – 25	P.208
			SBNPTH	N/A	12 – 25	P.210
7 Cartridge type		Cylindrical bore (with set screws)	**UCC**	1/2 – 4	12 – 140	P.212
		Tapered bore (with adapter)	**UKC**	3/4 – 4 1/2	20 – 125	P.216
8 Hanger type		Cylindrical bore (with set screws)	**UCHA**	1/2 – 3	12 – 75	P.218

Table 2.2 Types of ball bearing for Koyo Ball Bearing Unit

Type		Bearing bore dia. Surface (fixing to shaft)	Type code	Shaft dia. (inch)	Shaft dia. (mm)	Dimension table
Ball bearing for units	(1) Standard	Cylindrical bore (with set screws)	**UC**	1/2 – 4	12 – 140	P.220
	(2) Standard	Tapered bore(with adapter)	**UK**	3/4 – 4 1/2	20 – 125	P.228
	(3) Standard	Cylindrical bore (with eccentric locking collar)	**NA**	1/2 – 3	12 – 75	P.234
	(4) Light duty	Cylindrical bore (with set screws)	**SB**	1/2 – 1 1/2	12 – 40	P.220
	(5) Light duty	Cylindrical bore (with eccentric locking collar)	**SA**	1/2 – 1 9/16	12 – 40	P.234
			SA-F	1/2 – 2 3/16	12 – 55	
	(6) “Compact”	Cylindrical bore (with set screws)	**SU**	N/A	8 – 30	P.220
	(7) Stainless steel	Cylindrical bore (with set screws)	**UC-S6**	N/A	20 – 50	P.226
			SU-S6	N/A	10 – 30	
	(8) Cylindrical outside surface (with lubricating mechanism and snap ring)	Cylindrical bore (with set screws)	**ER**	1/2 – 2 7/16	12 – 60	P.238
	(9) Cylindrical outside surface	Cylindrical bore (with set screws)	**RB**	1/2 – 1 9/16	12 – 40	P.238
	(10) Adapter assembly		**H300X**	3/4 – 3	20 – 80	P.240
			H2300X	3/4 – 4 1/2	20 – 125	

2.2 Types and features

Koyo Ball Bearing Units are available in various types by combinations of bearings and housings.

Types and features of the Ball Bearing Units are shown below.

Remark) Descriptions of codes for unit with cover are shown in the table below. (common to all the types)

Diameter series	Code	Descriptions
2	C, CD	Pressed steel cover type
	FC, FCD	Cast iron cover type
X	C, CD	From **X05** to **X17** : pressed steel cover type **X18** and **X20** : cast iron cover type
3	C, CD	Cast iron cover type

1 Pillow block type units

1 Pillow block type units

UCP

UKP

NAP

NAPK

Cylindrical bore (with set screws)…Bearing **UC2 (X, 3)** series are used.
UCP2 (X, 3) : Standard type, **L3** : Triple-lip seal type,
C, CD (FC, FCD) : Pressed steel cover type or cast iron cover type
UCP2 (3) SC : Cast steel housing, **L3** : Triple-lip seal type,
C, CD (FC, FCD) : Cast iron cover type

Cylindrical bore (with eccentric locking collar)
…Bearing **NA2** series are used.
NAP2, NAPK2 : Standard type, **L3** : Triple-lip seal type

Tapered bore (with adapter)…Bearing **UK2 (X, 3)** series are used.
UKP2 (X, 3) : Standard type, **L3** : Triple-lip seal type,
C, CD (FC, FCD) : Pressed steel cover type or cast iron cover type
UKP2 (3) SC : Cast steel housing, **L3** : Triple-lip seal type,
C, CD (FC, FCD) : Cast iron cover type

This is the most typical type ball bearing unit. The rib at the bottom of the housing mounting section allows the highly strong structure which withstands against loads applied from all the directions.

The bearing units (UCPsc, UKPsc) with cast steel housings are also available in series, and are used for purposes with severe load conditions.

The housing can be installed to a machine with two bolts. As for the tapered bore (UKP) type, nominal number of adapter assembly which follows the nominal number of unit should be added.

Applications : Transmission devices, general industrial equipment

2 Thick section pillow block type units

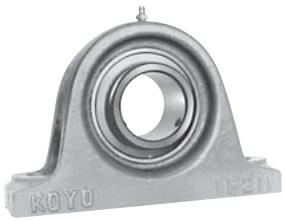

UCIP

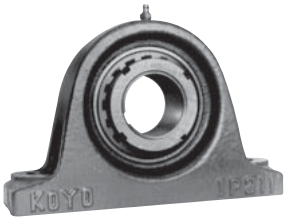

UKIP

Cylindrical bore (with set screws)…Bearing **UC2 (3)** series are used.
UCIP2 (3) : Standard type, **L3** : Triple-lip seal type,
C, CD (FC, FCD) : Pressed steel cover type or cast iron cover type

Tapered bore (with adapter)…Bearing **UK2 (3)** series are used.
UKIP2 (3) : Standard type, **L3** : Triple-lip seal type,
C, CD (FC, FCD) : Pressed steel cover type or cast iron cover type

This pillow block type unit is applicable for use with a great load. The thick and highly rigid housing is suitable to environment exposed to a great load, vibration, and impact. The mounting bolt holes are drilled, and the housing can be installed to the exact location with two bolts.

Applications : Crane, heavy object conveyor, quarrying plant, ships

3 Tapped-base pillow block type unit

UCPA

Cylindrical bore (with set screws)…Bearing **UC2** series are used.

UCPA2 : Standard type, **L3** : Triple-lip seal type

This pillow block type unit is designed so that the mounting space is reduced. It is installed to machines with the two tapped holes on the housing mounting bottom.

Applications : Roller conveyor, purpose with small mounting space

4 Higher centerheight pillow block type unit

UCPH

Cylindrical bore (with set screws)…Bearing **UC2** series are used.

UCPH2 : Standard type, **L3** : Triple-lip seal type

This unit, designed as the higher centerheight pillow block type unit, has high strength against impact load. It is suitable for the machine that the distance from the mounting bottom to the shaft center is long. The housing can be installed to machines with two bolts.

Applications : Printing machine, spinneret

5 Light duty pillow block type unit

BLP ALP

Cylindrical bore (with set screws)…Bearing **SB2** series are used.

BLP2

Cylindrical bore (with eccentric locking collar)
…Bearing **SA2** series are used.

ALP2

This pillow block type unit is designed for the aim of light-weight. The housing can be installed to machines with two bolts.

Applications : Machinery for general purposes aiming at lightweight

6 “Compact” series pillow block type unit

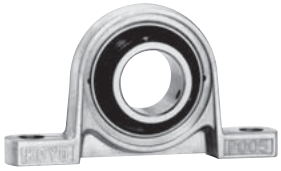

UP

Cylindrical bore (with set screws)…Bearing **SU0** series are used.

UP0

C, CD : Rubber coating cover type

The small and lightweight pillow block type unit, comprising the ball bearing for unit for light load and the special lightweight alloy housing, needs not to be lubricated additionally.

The housing can be installed to machines with two bolts.

Applications : Machineries for light load

(1 Pillow block type units)

7 Stainless-series pillow block type units

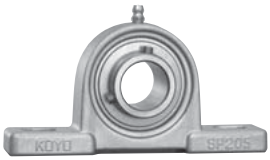

UCSP-H1S6

USP-S6

UCSPA-H1S6

Cylindrical bore (with set screws)

Standard…Bearing **UC2-S6** series are used.

UCSP2-H1S6

C, CD : Pressed stainless steel cover type

Tapped base…Bearing **UC2-S6** series are used.

UCSPA-H1S6

C, CD : Pressed stainless steel cover type

Compact…Bearing **SU0-S6** series are used.

USP0-S6

C, CD : Pressed stainless steel cover type

This superior anticorrosion pillow block type unit comprises the bearing and housing made of stainless steel. The unit is thinner than standard UCP series units, leading to downsizing of machinery. The housing can be installed to machines with two bolts.

Applications : Food machinery, agricultural machinery

8 Pressed steel pillow block type unit

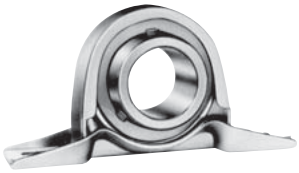

SBPP

SAPP

Cylindrical bore (with set screws)…Bearing **SB2** series are used.

SBPP2

Cylindrical bore (with eccentric locking collar)

…Bearing **SA2** series are used.

SAPP2

This lightweight pillow block type unit for light load comprises the ball bearing for lightweight unit and the pressed steel plate housing.

The housing can be installed to machines with two bolts.

Applications : Light duty conveyor, environment exposed to light load and low speed rotation

2 Square-flanged type units

1 Square-flanged type units

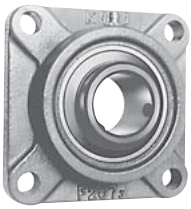

UCF, UCF-E

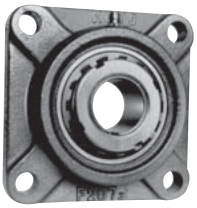

UKF

NANF

Cylindrical bore (with set screws)…Bearing **UC2 (X, 3)** series are used.

UCF2 (X, 3) : Standard type, **L3** : Triple-lip seal type,

C, D (FC, FD) : Pressed steel cover type or cast iron cover type

UCF2 (X) -E : Standard type, **L3** : Triple-lip seal type

Cylindrical bore (with eccentric locking collar)

…Bearing **NA2** series are used.

NANF2 : Standard type, **L3** : Triple-lip seal type

Tapered bore (with adapter)…Bearing **UK2 (X, 3)** series are used.

UKF2 (X, 3) : Standard type, **L3** : Triple-lip seal type,

C, D (FC, FD) : Pressed steel cover type or cast iron cover type

This bearing unit comprises the ball bearing for unit and the housing with square flange. It is suitable to use on a vertical surface, such as the side of machinery.

The housing can be installed to machines with four bolts.

2 Square-flanged types with spigot joint

UCFS

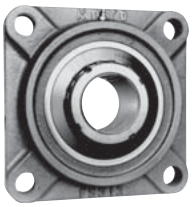

UKFS

Cylindrical bore (with set screws)…Bearing **UC3** series are used.

UCFS3 : Standard type, **L3** : Triple-lip seal type,
C, D : Cast iron cover type

Tapered bore (with adapter)…Bearing **UK3** series are used.

UKFS3 : Standard type, **L3** : Triple-lip seal type,
C, D : Cast iron cover type

This bearing unit comprises the ball bearing for unit, square flange, and the housing with spigot joint on the mounting surface. The housing can be installed to a machine by fitting the spigot joint into the mounting hole of it, and using four bolts.

The housing can be installed to the exact location by fitting the spigot joint into the mounting hole.

Applications : Rotating drum, rotating roller, purposes excellent mounting accuracy is required

3 Stainless-series square-flanged type unit

UCSF-H1S6

Cylindrical bore (with set screws)…Bearing **UC2-S6** series are used.

UCSF2-H1S6
C, D : Pressed stainless steel cover type

In this superior waterproof and anticorrosion square-flanged type unit, bearing and housing are made of stainless steel. The unit is thinner than standard UCF series units, leading to downsizing of machinery. The housing can be installed to machines with four bolts.

Applications : Food machinery, agricultural machinery

3 Oval flange type units

1 Rhombic-flanged type units

UCFL, UCFL-E

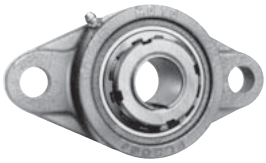

UKFL

NANFL

Cylindrical bore (with set screws)…Bearing **UC2 (X, 3)** series are used.

UCFL2 (X, 3) : Standard type, **L3** : Triple-lip seal type,
C, D (FC, FD) : Pressed steel cover type or cast iron cover type

UCFL2 (X) -E : Standard type, **L3** : Triple-lip seal type,

Cylindrical bore (with eccentric locking collar)
…Bearing **NA2** series are used.

NANFL2 : Standard type, **L3** : Triple-lip seal type

Tapered bore (with adapter)…Bearing **UK2 (X, 3)** series are used.

UKFL2 (X, 3) : Standard type, **L3** : Triple-lip seal type,
C, D (FC, FD) : Pressed steel cover type or cast iron cover type

This bearing unit comprises the ball bearing for unit and the housing with rhombic flange. It is suitable to use on a vertical surface, such as the side of machinery. Compared to the square-flanged type unit, it requires less mounting space, and the unit weight is also reduced.

Since the pitches of the center of two mounting bolt holes on the rhombic-flanged type housing are the same as those of the center of bolt holes located opposite each other on the square-flanged housing, they are compatible.

The housing can be installed to machines with two bolts.

Applications : Roller conveyor, environment the mounting dimensions are small

(3 Oval flange type units)

2 Adjustable rhombic-flanged type unit

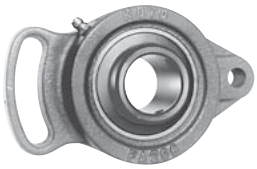

UCFA

Cylindrical bore (with set screws)…Bearing **UC2** series are used.

UCFA2 : Standard type, **L3** : Triple-lip seal type

This rhombic-flanged type unit allows angle adjustment with a supporting point as the shaft center. Therefore, when the bearing unit is installed, fine adjustment of supporting location for the shaft center is enabled.

Since the pitches of the center of mounting bolt holes on the housing are the same as those of the square-flanged type unit and rhombic-flanged type unit, they are compatible.

The housing can be installed to machines with two bolts.

3 Three-bolt flange type unit

UCFB

Cylindrical bore (with set screws)…Bearing **UC2** series are used.

UCFB2 : Standard type, **L3** : Triple-lip seal type,

The housing of this unit has the one-side oval flange, and the unit is suitable to use on a vertical surface and in a limited space, such as the side of machinery.

The housing can be installed to machines with three bolts.

4 Light duty rhombic-flanged type units

BLF

ALF

Cylindrical bore (with set screws)…Bearing **SB2** series are used.

BLF2

Cylindrical bore (with eccentric locking collar)

…Bearing **SA2** series are used.

ALF2

This rhombic-flanged type unit is designed for the aim of lightweight. The housing can be installed to machines with two bolts.

5 “Compact” series rhombic-flanged type unit

UFL

Cylindrical bore (with set screws)…Bearing **SU0** series are used.

UFL0

C, D : Rubber coating cover type

The small and lightweight rhombic-flanged type unit, comprising the ball bearing for unit for light load and the special lightweight alloy housing, needs not to be lubricated additionally.

The housing can be installed to machines with two bolts.

Applications : Machineries for light load

6 Stainless-series rhombic-flanged type units

UCSFL-H1S6

USFL-S6

Cylindrical bore (with set screws)

Standard…Bearing **UC2X (2) -S6** series are used.

UCSFL2X (2) -H1S6

C, D : Pressed stainless steel cover type

Compact…Bearing **SU0-S6** series are used.

USFL0-S6

C, D : Rubber coating cover type

This superior anticorrosion rhombic-flanged type unit comprises the bearing and housing made of stainless steel. The unit is thinner than standard UCFL series units, leading to downsizing of machinery.

The housing can be installed to machines with two bolts.

Applications : Food machinery, agricultural machinery

4 Round-flanged types with spigot joint

Round-flanged types with spigot joint

UCFC, UCFC-E

UKFC

Cylindrical bore (with set screws)…Bearing **UC2 (X)** series are used.

UCFC2 (X) : Standard type, **L3** : Triple-lip seal type,

C, D (FC, FD) : Pressed steel cover or cast iron cover type

UCFCX-E : Standard type, **L3** : Triple-lip seal type

Tapered bore (with adapter)…Bearing **UK2 (X)** series are used.

UKFC2(X) : Standard type, **L3** : Triple-lip seal type,

C, D (FC, FD) : Pressed steel cover or cast iron cover type

This bearing unit comprises the ball bearing for unit, round flange, and the housing with spigot joint on the mounting surface. The housing can be installed to machines by fitting the spigot joint into the mounting hole of machinery, and using four bolts.

The housing can be installed to the exact location by fitting the spigot joint into the mounting hole.

Applications : Rotating drum, rotating roller, purposes excellent mounting accuracy is required.

5 Pressed steel flange type units

1 Pressed steel round-flanged type units

SBPF

SAPF

Cylindrical bore (with set screws)…Bearing **SB2** series are used.

SBPF2

Cylindrical bore (with eccentric locking collar)

…Bearing **SA2** series are used.

SAPF2

This lightweight round-flanged type unit for light load comprises the ball bearing for lightweight unit and the pressed steel plate housing.

The housing can be installed to machines with three bolts.

Applications : Light duty conveyor, environment exposed to light load and low speed rotation

(5 Pressed steel flange type units)

2 Pressed steel rhombic-flanged type units

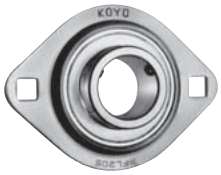

SBPFL SAPFL

Cylindrical bore (with set screws)…Bearing **SB2** series are used.

SBPFL2

Cylindrical bore (with eccentric locking collar)
…Bearing **SA2** series are used.

SAPFL2

This lightweight rhombic-flanged type unit for light load comprises the ball bearing for lightweight unit and the pressed steel plate housing. Compared to the pressed steel round-flanged type unit, less mounting space is required.
The housing can be installed to machines with two bolts.
Applications : Light duty conveyor, environment exposed to light load and low speed rotation

6 Take-up type units

1 Take-up type units

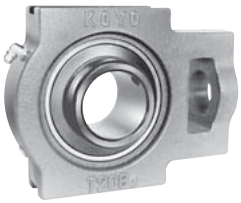

UCT, UCT-E

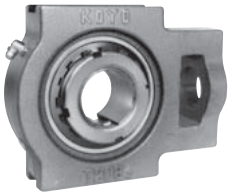

UKT

Cylindrical bore (with set screws)…Bearing **UC2 (X, 3)** series are used.

UCT2 (X, 3) : Standard type, **L3** : Triple-lip seal type,
C, CD (FC, FCD) : Pressed steel cover or cast iron cover type

UCT2 (X) -E : Standard type, **L3** : Triple-lip seal type

Tapered bore (with adapter)…Bearing **UK2 (X, 3)** series are used.

UKT2(X, 3) : Standard type, **L3** : Triple-lip seal type,
C, CD (FC, FCD) : Pressed steel cover or cast iron cover type

The bearing unit comprises the ball bearing for unit and the housing with slide groove. This unit allows angle adjustment with a supporting point of the shaft center by moving the housing in radial direction along the slide groove.
Applications : Belt conveyor, use the supporting point of the shaft center must be adjusted

2 Stainless-series take-up type unit

Cylindrical bore (with set screws)…bearing **UC2-S6** series are used.

UCT2-H1S6

C, CD : Pressed stainless steel cover type

This superior anticorrosion take-up type unit comprises the bearing and the housing made of stainless steel. The unit is thinner than standard UCT series units, leading to downsizing of machinery.
Applications : Conveyor of food machinery, agricultural machinery

UCST-H1S6

3 Section steel frame take-up type unit

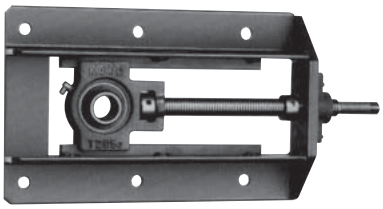

UCTH

Cylindrical bore (with set screws)…Bearing **UC2** series are used.

UCTH2 : Standard type, **L3** : Triple-lip seal type,
C, CD (FC, FCD) : Pressed steel or cast iron cover type

This unit comprises the take-up type unit, the section steel frame, adjuster bolt, and so on.
This unit allows adjustment of the supporting point of the shaft center by moving the housing in radial direction with the adjuster bolt on the unit.
The housing can be installed to machines with six bolts.
Applications : Belt conveyor, use the supporting point of the shaft center must be adjusted

4 Channel steel frame take-up type unit

UCTL

Cylindrical bore (with set screws)…Bearing **UC2 (3)** series are used.

UCTL2 : Standard type, **L3** : Triple-lip seal type,
C, CD (FC, FCD) : Pressed steel cover or cast iron cover type

UCTU2 (3) : Standard type, **L3** : Triple-lip seal type,
C, CD (FC, FCD) : Pressed steel cover or cast iron cover type

This unit comprises the take-up type unit, the channel steel frame, adjuster bolt, and so on. This unit allows adjustment of the supporting point of the shaft center by moving the housing in radial direction with the adjuster bolt in the frame.
Since this unit is installed with the frame stood, the mounting space is reduced.
The TL lightweight type unit is made of light channel steel, and the TU highly rigid type unit is made of channel steel. The housing can be installed to machines with two or four bolts.
Tapered bore (with adapter) unit is also available (examples of nominal number : UKTL 207J-100, UKTU208J-500).
Applications : Belt conveyor, use the supporting point of the shaft center must be adjusted

5 Pressed steel frame take-up type unit

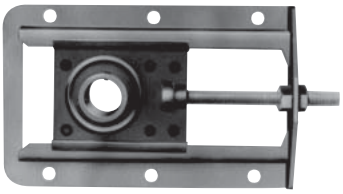

SBPTH

Cylindrical bore (with set screws)…Bearing **SB2** series are used.

SBPTH2

SBNPTH2

This unit comprises the pressed steel take-up type unit, the pressed steel frame, adjuster bolt, and so on. This unit allows adjustment of the supporting point of the shaft center by moving the housing in radial direction with the adjuster bolt in the frame.
Since the housing and the frame are made of pressed steel, the unit is compact and lightweight. The housing can be installed to machines with four or six bolts.
Applications : Small belt conveyor for lightload, use the supporting point of the shaft center must be adjusted

7 Other units

1 Cartridge type units

UCC

UKC

Cylindrical bore (with set screws)…Bearing **UC2 (X, 3)** series are used.

UCC2 (X, 3) : Standard type, **L3** : Triple-lip seal type

Tapered bore (with adapter)…Bearing **UK2 (X, 3)** series are used.

UKC2 (X, 3) : Standard type, **L3** : Triple-lip seal type

This unit comprises the ball bearing for unit and the housing with the cylindrical outside surface. The housing, having the grounded cylindrical outer surface, can be fit to the cylindrical bore of a machine.

The cartridge type unit, moving in axial direction, is used as the bearing for free side when a shaft is expanded or contracted.

The cylindrical outside surface and the automatic aligning mechanism allow handling similar to standard automatic aligning type bearing.

2 Hanger type unit

UCHA

Cylindrical bore (with set screws)…Bearing **UC2** series are used.

UCHA2 : Standard type, **L3** : Triple-lip seal type

The bearing unit comprises the ball bearing for unit and the housing with parallel thread for pipe on one side. The compact housing is installed to machinery with suspended with steel pipe.

Applications : Intermediate bearing of screw conveyor

8 Ball bearings for units

1 UC type bearing

UC

Cylindrical bore (with set screws)

UC2 (X, 3)…Standard type

UC2 (X, 3) L3…Triple-lip seal type

UC2-S6…Stainless steel series

This grease sealed type deep groove ball bearing incorporates the outer ring with the spherical outside surface and lubricating mechanism and wide inner ring with cylindrical bore set screw. Two types, standard type (oil seal and flinger are included) and triple-lip seal type (supplementary code : L3), are available, depending on the type of sealing device.

It can be fixed to shaft with two set screws on the inner ring. It is the most typical type in ball bearings for unit.

The UC2-S6 series are superior waterproof and anticorrosive ball bearings for unit. The bearing is made of stainless steel, and the series are used for stainless-series units.

As for the types and features of set screw for UC type bearing, see **“14 Handling”**.

2 UK type bearing

UK

Tapered bore (with adapter)

UK2 (X, 3)…Standard type

UK2 (3) L3…Triple-lip seal type

This grease sealed type deep groove ball bearing incorporates the outer ring with the spherical outside surface and lubricating mechanism and wide inner ring with tapered bore. Two types, standard type (oil seal and flinger are included) and triple-lip seal type (supplementary code : L3), are available, depending on the type of sealing device.

It can be fixed to shaft with the adapter. The UK type bearing (with adapter) is optimal for use of long shaft.

As for the UK type bearing, applicable adapter assembly number should be added to the bearing number.

3 NA type ball bearing

NA

Cylindrical bore (with eccentric locking collar)

NA2

This type is based on the UC type bearing having set screw, but equipped with the eccentric locking collar. The grease sealed type deep groove ball bearing incorporates the spherical outside surface outer ring with lubricating mechanism and the cylindrical bore, wide inner ring, and eccentric locking collar with eccentric section on one side. The sealing device is equipped with the oil seal and flinger.

When fixing the bearing to shaft, fit the eccentric recessed section of the eccentric locking collar to the eccentric section of the inner ring, turn the eccentric locking collar to fix it to shaft, and tighten the set screw of the eccentric locking collar to shaft.

4 SB type bearing

SB

Cylindrical bore (with set screws)

SB2

This is the lightweight UC type bearing. The non-lubricating type grease sealed deep groove ball bearing incorporates the spherical outside surface outer ring and the wide inner ring with cylindrical bore set screw. When fixing it to shaft, use the two set screws on the inner ring.

It is used for lightweight unit or pressed steel unit.

5 SA type bearing

SA SA-F

Cylindrical bore (with eccentric locking collar)

SA2, SA2-F

This type is based on the SB type bearing having set screw, but equipped with the eccentric locking collar. The non-lubricating type grease sealed type deep groove ball bearing incorporates the spherical outside surface outer ring and the cylindrical bore, wide inner ring, and eccentric locking collar with eccentric section on one side.

When fixing the bearing to shaft, fit the eccentric recessed section of the eccentric locking collar to the eccentric section of the inner ring, turn the eccentric locking collar to fix it to shaft, and tighten the set screw of the eccentric locking collar to shaft.

(SA-F type bearing has lubricating mechanism on outer ring.)

It is used for lightweight unit or pressed steel unit.

(8 Ball bearing for units)

6 SU type bearing ("compact" series)

SU

Cylindrical bore (with set screws)

SU0…Standard type

SU0-S6…Stainless steel

The bearing series intended for light load is suitable for downsizing and weight saving.

The non-lubricating type grease sealed deep groove ball bearing incorporates the spherical outside surface outer ring and the wide inner ring with cylindrical bore set screw. When fixing it to shaft, use the two set screws on the inner ring.

The SU0-S6 type bearing for unit, made of stainless steel, is superior in corrosion resistance, and used for stainless-series units.

7 ER type bearing

ER

Cylindrical bore (with set screws), cylindrical outside surface, lubricating mechanism, locating snap ring and snap ring groove

ER2

The grease sealed type deep groove ball bearing incorporates the spherical outside surface with lubricating mechanism and set screw, the wide inner ring with cylindrical bore set screw. When fixing it to shaft, use the two set screws on the inner ring.

It features lubricating mechanism, set screw (easy to locate bearing), clearance fit of inner ring and shaft (easy to install). Therefore, it can be used for various purposes in a similar way to standard bearings.

8 RB type bearing

RB

Cylindrical bore (with set screws), cylindrical outside surface

RB2

This bearing is based on the ER type bearing, but without the lubricating mechanism and locating snap ring and snap ring groove. The grease sealed deep groove ball bearing incorporates the spherical outside surface outer ring and the wide inner ring with cylindrical bore set screw. When fixing it to shaft, use the two set screws on the inner ring.

Since clearance fit may be used for installation of the inner ring to shaft (easy to install), it can be used for various purposes in a similar way to standard bearings.

2.3 Unit for special use

To meet with requests for varied and special purposes, JTEKT supplies ball bearing series for special use with various features, as well as standard types. If you use ball bearing units under special environment or conditions, select optimal type among ball bearing units for special use.

JTEKT produces bearing units in various forms and specifications, other than units for special use. Contact JTEKT, if you need them.

1 Triple-lip seal unit (supplementary code : L3)

Triple-lip seal has the structure in which the triple-lip oil seal is glued to the pressed steel shield plate with vulcanized adhesive. The triple-lip eliminates ingress of dusts and mud water into bearing to ensure long service life of the bearing even under severe environmental conditions.

Since the triple-lip seal is fit to the outer ring of the bearing, the triple-lip seal bearing unit can be handled in the same manner as the standard types. The triple-lip seal unit does not lead to uneven contact of the shaft with seal while the bearing is aligned unlike the unit with cover, and maintains stable sealing performance for a long time.

The triple-lip seal unit is the outstanding product that defects of conventional dust and water preventive unit are improved to realize energy-saving and low cost. The triple-lip seal is applicable to the UC type bearing and the UK type bearing.

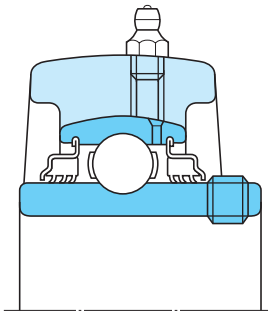

Fig. 2.1 Structure of triple-lip seal unit

2 Unit with cover (supplementary code : C, D, FC, FD)

The unit with cover is equipped with the standard type housing and the pressed steel cover or cast iron cover, and features the double sealing structure of bearing and housing. The unit ensures a long service life of bearing even under severe environmental conditions such as dusts and mud water.

The unit with cover is available in two types : open ends type C type, FC type, closed end type D type, and FD type (for pillow block type unit, CD type or FCD type).

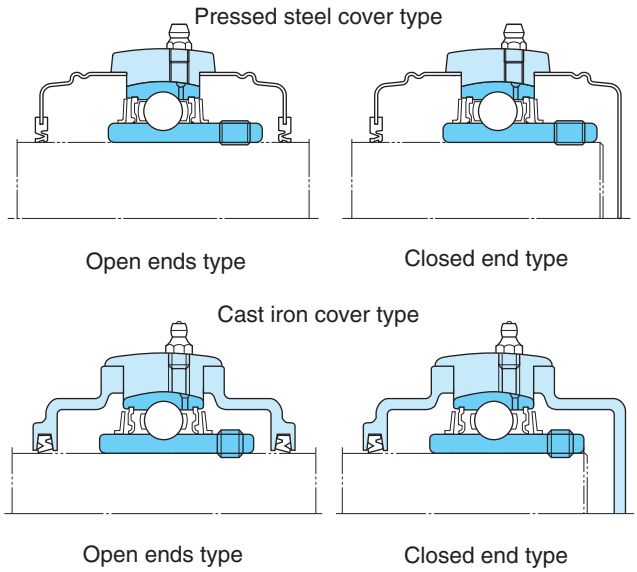

Fig. 2.2 Type and structure of unit with cover

3 Heat resistant unit (special code : D1K2) and Cold resistant unit (special code : D2K2)

The operating temperature range of a ball bearing unit depends on the performance of grease and oil seal (rubber) used for the bearing. The operating temperature range of Koyo Ball Bearing unit (standard type) ranges from –20 ºC to 100 ºC.

If you use bearing units in the higher or lower temperature range beyond the operating temperature range of standard type, select the heat resistant (special code : D1K2) or the cold resistant unit (special code : D2K2).

Specifications of the heat resistant unit and the cold resistant unit are shown in **Table 2.3**.

Table 2.3 Specifications of heat resistant unit and cold resistant unit

Category	Special code	Operating temperature range (ºC)	Grease	Oil seal rubber material	Bearing internal clearance	
					UC type	UK type
Standard	(no code)	–20 to 100	Albania No. 2, Gold No. 3 or equivalence (lithium soap)	Nitrile	CN	C3
Heat resistant	D1K2	–40 to 180	SH44M (lithium soap)	Silicone	C4	C5
Cold resistant	D2K2	–50 to 120	SH33M (lithium soap)	Silicone	CN	C3

4 High speed unit (special code : K3)

The high speed unit (special code : K3) is the product that has been developed for intention of high speed and less heat. For the high speed unit bearing, the non-contact type oil seal optimal for high speed rotation and low torque is used.

This unit is intended for the purposes high speed rotation, low torque, and less heat are required, such as textile machinery and printing machinery.

5 Unit for blower (special code : S5)

The ball bearing unit for blower must meet requests for high speed rotation, less heat, less vibration, and low noise.

To meet with these requests for performance, JTEKT supplies the series of unit for blower (special code : S5) that the non-contact type oil seal is used, as well as improves the machining accuracy.

This unit is intended for the purposes high speed rotation, less heat, less vibration, low noise are required, such as a blower.

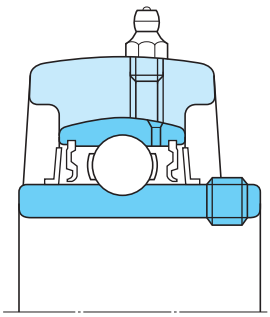

Fig. 2.3 Structure of bearing unit for blower

6 "Compact" series unit

For downsizing of machinery in facilities, the set screw method facilitating installation of the shaft is adopted for this unit.

The unit comprises the compact bearing and the special alloy housing.

Since the cover surface is coated with rubber, it contacts close with the housing well, and features superior dustproof and waterproof performance.

Operating temperature range : Standard temperature

7 Stainless-series unit (special code : S6)

The ball bearing units used for food machinery need waterproof performance.

For this purpose, JTEKT has released a series of Ball Bearing units of which bearings and housings are made of stainless steel in order to satisfy the required performance.

We can also provide bearing units packing grease applicable to use related to food certified by USDA (US Agriculture Department) H1.

Operating temperature range : From –20 ℃ to +100 ℃

* If you use this unit for machines splashed with water or in the environment that the operating temperature exceeds 50 ℃, it is recommended you use UC-S6 to be able to be lubricated for SU-S6.

3 Selection of unit

3.1 Outline of selection

Koyo Ball Bearing Units are available in various types and series. Therefore, to select the bearing unit optimal for design of machinery, various factors including the structure of machinery, operating conditions, performance required for bearing unit, specifications relative to the unit, marketability, and economic efficiency, must be comprehensively taken into consideration. Service life of the bearing greatly depends on the quality of selection.

Procedures of selection of standard ball bearing units are shown in **Table 3.1**.

Table 3.1 Procedures of selection of standard ball bearing units

Procedures of selection	Items to be examined	Operating conditions to be considered	Reference
1 Selection of type	· Pillow block type · Flange type · Take-up type · Cartridge type · Hanger type	Structure of machinery, mounting space, mounting dimensions	2 Types (P.10)
2 Selection of shaft dia. and dia. series	· Bearing bore dia. : From 10 to 140 mm · Dia. series : 0, 2, X, 3	Rating life of bearings required, load applied to bearings, rotational speed	4 Life of bearing (P.28) 5 Bearing load (P.31) 6 Allowable rotational speed (P.38)
3 Selection against atmosphere	· L3 type · Cover type · Stainless steel series · For high speed use · For blower	Environment (dusts, mud water, high humidity, chemicals), rotational speed	2 Types (P.10) (P.23) 6 Allowable rotational speed (P.38)
4 Selection against temperature	· Heat resistant type · Cold resistant type · Measures against expansion and contraction of shaft · Grease supply	Bearing temperature	2 Types (P.10) (P.23) 7 Operating temperature and bearing specifications (P.39) 9 Design of shaft and base (P.45) 14 Handling (P.61)
5 Selection of installing to shaft	· Set screw · Adapter · Eccentric locking collar	Rotational speed, load conditions, handling	2 Types (P.10) 14 Handling (P.61)
6 Selection of shafts	· Dimensional tolerance · Adoption of shouldered shaft · Provision of set screw for shaft · Measures against expansion and contraction of shaft	Rotational speed, load conditions, bearing temperature	2 Types (P.10) (P.23) 6 Allowable rotational speed (P.38) 9 Design of shaft and base (P.45) 14 Handling (P.61)
7 Selection of strength of housings	· Cast iron · Cast steel · Pressed steel	Load conditions, load directions, presence of impact	8 Strength of housing (P.40)
8 Selection of lubrication	· Lubricating type · Non-lubricating type · Centralized lubricating type · Greasing interval	Environment, importance of machine, bearing temperature, grease life	14 Handling (P.61)
9 Selection of maintenance and check	· Periodic inspection · Grease supply	Environment, importance of machine, bearing temperature, grease life	14 Handling (P.61)

3.2 Selection of type and specifications

Koyo Ball Bearing Units series are available in various types and specifications applicable to your purposes. Therefore, when selecting types and specifications of bearing unit, structure of machine, operating conditions, and environment must be fully taken into consideration for comprehensive examination.

Outline of selection of ball bearing unit types and specifications are shown in **Table 3.2**.

Table 3.2 (1) Outline of selection of ball bearing unit types and specifications

○ : Acceptable or Yes, × : Unacceptable or No

Category	Performance required		Bearing specifications			Applicable housing
	Operating conditions	Fixing to shaft	Sealing structure	Type code	Lubrication	
Bearing	Standard	Set screw Adapter	Oil seal and flinger	UC UK	○	C, F, FA, FB, FC, FL, FS, HA, IP, P, PA, PH, T, TH, TL, TU
		Eccentric locking collar		NA	○	C, FC, NF, NFL, P, T
	Dustproof and waterproof	Set screw Adapter	Triple-lip seal	UC-L3 UK-L3	○	C, F, FA, FB, FC, FL, FS, HA, IP, P, PA, PH, T, TH, TL, TU
	Lightweight	Set screw	Oil seal	SB	×	LF, LP, PF, PFL, PP, PTH, NPTH
	"Compact"	Set screw		SU		FL0, P0
	Anticorrosion	Set screw	Oil seal and flinger	UC-S6	○	SFL-H1, SP-H1
	Anticorrosion and compact		Oil seal	SU-S6	×	SFL0, SP0
	Heat resistant Cold resistant For high speed For blower	Set screw Adapter	Oil seal and flinger	UC UK	○	C, F, FA, FB, FC, FL, FS, HA, IP, P, PA, PH, T

Table 3.2 (2) Outline of selection of ball bearing unit types and specifications

Category	Performance required		Housing specifications				Applicable bearing
	Type	Operating conditions	Type code	Material	Presence of cover	Lubrication	
Housing	Pillow block type	Standard	P	Cast iron	○	○	UC (-L3), UK (-L3)
		Cast steel (highly strong)	Psc	Cast steel			
		Thick section (highly strong)	IP	Cast iron			
		Tapped-base	PA	Cast iron	×	○	UC (-L3)
		Higher centerheight	PH			○	UC (-L3)
		Light duty	LP			×	SB
		"Compact"	P0	Special light alloy	○	×	SU
		Anticorrosion	SP-H1	Stainless steel		○	UC-S6
		Anticorrosion and compact	SP0	Stainless steel		×	SU-S6
		Pressed steel	PP	Pressed steel	×	×	SB
	Flange type	Square	F	Cast iron	○	○	UC (-L3), UK (-L3)
		With spigot joint (square)	FS				
		(round)	FC				
		Oval	FL	Cast iron	×	○	UC (-L3)
		Shaft alignment (adjustable oval)	FA				
		Cantilever (deformed)	FB				
		Light duty (oval)	LF	Cast iron	×	×	SB
		"Compact" (oval)	FL0	Special light alloy	○	×	SU
		Anticorrosion (oval)	SFL-H1	Stainless steel	○	○	UC-S6
		Anticorrosion and compact (oval)	SFL0	Stainless steel	○	×	SU-S6

Table 3.2 (2) Outline of selection of ball bearing unit types and specifications

Category	Performance required		Housing specifications				Applicable bearing
	Type	Operating conditions	Type code	Material	Presence of cover	Lubrication	
Housing	Flange type	Pressed steel (round) (oval)	PF PFL	Pressed steel	×	×	SB
	Take-up type	Standard	T	Cast iron	○	○	UC (-L3), UK (-L3)
		Section steel frame type	TH	Cast iron	○	○	UC (-L3)
		Channel steel frame type	TL TU	Cast iron	○	○	UC (-L3), UK (-L3)
		Pressed steel frame type	PTH NPTH	Pressed steel	×	×	SB
	Cartridge type	Standard	C	Cast iron	×	○	UC (-L3), UK (-L3)
	Hanger type	Standard	HA	Cast iron	×	○	UC (-L3)

3.3 Selection from a maintenance standpoint

Koyo Ball Bearing Units need not to be maintained or checked for standard purposes during operation, because of their structures. However, they must be periodically maintained or checked if they are used for important machines or under special environment.

Thus, it is important that intervals of periodic maintenance or check during operation are extended or ball bearing units optimal for purposes or operating conditions are selected in order to reduce the manpower required for maintenance and check.

For your purposes, various factors must be fully examined. In the environment exposed to vibration or impact, increase in safety factor of service life of the bearing, and strength of the housing must be fully examined. In the environment exposed to great axial load, use of shouldered shaft, in the environment exposed to dusts or mud water, use of the triple-lip seal type or covered type, in the environment exposed to high or low temperature, material of oil seal and grease brand must be fully taken into consideration.

4 Life of bearing

If a ball bearing unit is installed to a machine or device and operated, vibration or noise from the unit may be increased or seizure may occur, after a certain period has passed, even under appropriate conditions. The period of bearing operation until the unit cannot be used due to these causes is called the life of ball bearing unit.

Life of a ball bearing unit is caused by two reasons, fatigue of bearing material (fatigue service life) and degradation of grease leading to faulty lubrication, and inability of continuous use. Each of them can be found as the rating life of bearing and grease life.

The life of ball bearing unit depends on the shorter one, between the rating life of bearing and grease life. Since the lubricating system is adopted for the Koyo Ball Bearing Unit, the grease life can be extended to the rating life of bearing by appropriate lubrication. If the bearing unit is used without lubrication, the shorter period, the rating life of bearing or grease life, is the life of the bearing unit.

However, a ball bearing unit is actually installed to a machine or device and operated, the unit cannot be used due to causes other than the rating life of bearing or grease service life (wear, dent, crack, seizure, etc.). They can be prevented by full examination of the selection, handling, installation, and lubrication of the ball bearing unit.

4.1 Basic rating life and basic rating load

4.1.1 Basic rating life

While a bearing is rotated under load, the raceways surfaces of the inner and outer rings of bearing and the rolling surfaces of rolling element are exposed to load continuously. Thus, damages like scales appear on the raceway surfaces or rolling surfaces due to fatigue of material (flaking or peel-off). The total number of revolution until the damages appear is called as "(Fatigue) service life" of bearing. Fatigue service life of bearing may be greatly varied even if the bearings having the same structure, dimensions, materials, and machining methods, are operated under the same operating conditions.

To solve this problem, if a group of the same bearings are operated under the same conditions, the total number of revolution of 90% of the bearings without damage due to rotating fatigue (life of 90% reliability) is called as the **"Basic rating life of bearing"**.

4.1.2 Basic rating load

Basic rating load indicates the withstanding strength against rolling fatigue of a bearing, that is to say, loading capacity. It is the pure radial load of a certain level and direction (for radial bearing) or central axial load (for thrust bearing) that a million times of rotations can be obtained as the basic rating life if the inner ring of bearing is rotated while the outer ring is stopped (or the outer ring is rotated while the inner ring is stopped).

They are called as the **basic dynamic radial load rating** (C_r) for radial bearing or the **basic dynamic axial load rating** (C_a) for axial bearings.

In the ball bearing for ball bearing unit, it is indicated as the basic dynamic radial load rating (C_r), and the value is shown in the dimensional table.

4.2 Calculation of rating life

Relation between the basic rating life, basic dynamic load rating, and the dynamic equivalent load of the ball bearing for ball bearing unit can be indicated as the **Formula (4.1)**. If the ball bearing unit is used at a fixed rotational speed, it is convenient that the life is indicated as time, as shown in the **Formula (4.2)**.

(Total revolution) $$L_{10} = \left(\frac{C_r}{P_r}\right)^3 \quad \cdots\cdots (4.1)$$

(Time) $$L_{10h} = \frac{10^6}{60n}\left(\frac{C_r}{P_r}\right)^3 \quad \cdots\cdots (4.2)$$

Whereas,

L_{10}	: Basic rating life	10^6 rotations
L_{10h}	: Basic rating life	h
C_r	: Basic dynamic load rating	N
P_r	: Dynamic equivalent load (see **"5 Bearing load"**)	N
n	: Rotational speed	min^{-1}

Calculation of the basic rating life with using the life factor (f_h) and the speed factor (f_n) in the **Formula (4.2)** are shown below.

$$L_{10h} = 500\ f_h^3 \quad \cdots\cdots (4.3)$$

Life factor $$f_h = f_n \cdot \frac{C_r}{P_r} \quad \cdots\cdots (4.4)$$

Speed factor $$f_n = \left(\frac{10^6}{500 \times 60n}\right)^{1/3} = (0.03n)^{-1/3} \quad \cdots\cdots (4.5)$$

Values of f_n, f_h and L_{10h} can be easily found by the nomogram of **Fig. 4.1**.

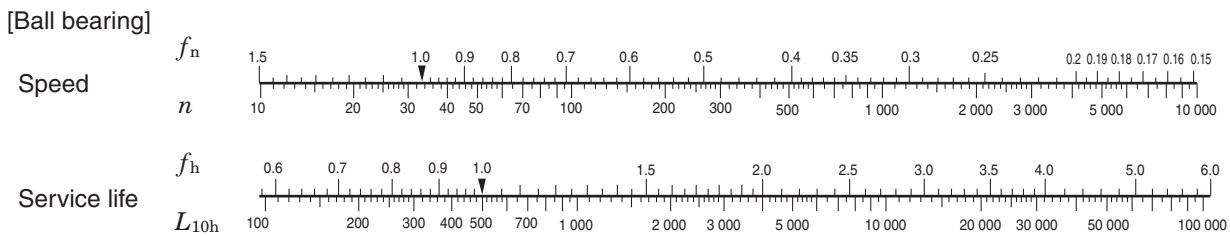

Fig. 4.1 Rotational speed (n) and its coefficients (f_n), and service life coefficient (f_h) and basic rating life (L_{10h})

4.2.1 Correction of basic rating load for high temperature use

If a ball bearing unit is used at a high temperature, structure of bearing material is changed, leading to decreased hardness, and the basic dynamic load rating is reduced than that of the use at standard temperature. Once the structure of bearing material is changed, it will not be restored even if the temperature returns to standard level.

Therefore, when using a ball bearing unit at 150 ºC or more, the basic rating load must be corrected by multiplying the basic dynamic load rating shown in dimensional table by the temperature factor shown in **Table 4.1**.

If the ball bearing unit has been used for a long period at 120 ºC or more, fluctuations in dimensions of the bearing may be increased. If you use it under such conditions, contact JTEKT.

Table 4.1 Temperature factor

Bearing temperature, ºC	125	150	175	200	250
Temperature factor	1	1	0.95	0.90	0.75

4.2.2 Corrected rating life

Although the basic rating life (L_{10}) shown in **Formula (4.1)** is the fatigue life of bearing with 90% reliability, service life with 90% or more reliability is required, depending on the purposes. The bearing life may be extended by adoption of special material. Furthermore, operating conditions including lubrication may give influence on the bearing life.

The corrected rating life, obtained by correcting the basic rating life taking these points into consideration, can be found by **Formula (4.6)**.

$$L_{na} = a_1 a_2 a_3 L_{10} \quad \cdots\cdots (4.6)$$

Whereas,

L_{na} : Corrected rating life — 10^6 rotations
Life that characteristics of bearing and operating conditions are taken into consideration with reliability 100–n% (the probability of failure occurrence is expressed by n)

L_{10} : Basic rating load — 10^6 rotations
(Life with 90% reliability)

a_1 : Reliability factor ..... see (1)

a_2 : Bearing characterization factor ..... see (2)

a_3 : Operating condition factor ..... see (3)

(1) Reliability factor a_1

Values of reliability factor a_1 required in order to find the corrected rating life of bearing with 90% or more reliability (failure occurrence probability : 10% or less) are shown in **Table 4.2**.

Table 4.2 Reliability factor a_1

Reliability, %	L_{na}	a_1
90	L_{10a}	1
95	L_{5a}	0.62
96	L_{4a}	0.53
97	L_{3a}	0.44
98	L_{2a}	0.33
99	L_{1a}	0.21

(2) Bearing characterization factor a_2

Bearing characterization relative to the life of bearing may depend on the bearing material (type of steel, quality), production procedure, and design. In such a case, correct the basic rating life of bearing by the bearing characterization factor a_2.

For Koyo Ball Bearing for ball bearing unit, high quality vacuum-degassed bearing steel is used as the standard material, and it causes a longer service life of bearing. In Koyo Ball Bearing for ball bearing unit, bearing characterization factor a_2 is 1 ($a_2 = 1$).

As for the bearing special material used for longer fatigue limit, bearing characterization factor a_2 larger than 1 ($a_2 > 1$) can be used.

(3) Operating condition factor a_3

If a bearing is operated under the operating conditions that may directly influence on the life of bearing (especially, appropriate or inappropriate lubrication), the basic rating life should be corrected with the operating condition factor a_3.

If lubrication is appropriate, the operating condition factor should be as follows : $a_3 = 1$. If it is excellently good, following condition should be applied : $a_3 > 1$.

If any of the operating conditions shown below is satisfied, following condition should be applied : $a_3 < 1$.

(1) Kinematical viscosity of lubricant during operation is low ..... Ball bearing : 13 mm^2/s or less,

(2) Rotational speed is low ..... $d_m n$: 10 000 or less
[Remark] d_m (Pitch dia. of ball set) $\times$ n (Rotational speed)

(3) Foreign matters are mixed in lubricant

Even if the bearing characterization factor is as follows with using special material : $a_2 > 1$, the value satisfying the following condition cannot be adopted if lubricant is inappropriate : $a_2 \times a_3 > 1$. Therefore, if the operating condition factor is smaller than 1 ($a_3 < 1$), the following condition seems to be satisfied, in general : $a_2 \leqq 1$.

4.2.3 Recommended service life of bearing

Excessively long life of ball bearing unit does not lead to economic operation. Setup of the recommended service life of bearing unit depending on the type of machine the ball bearing unit is used together and operating conditions is required.

Recommended service life of ball bearing unit empirically adopted is shown in **Table 4.3**.

Table 4.3 Recommended service life of ball bearing unit (reference)

Operating conditions	Application	Recommended service life, h
Operated in short period or intermittently	Home electric appliances, electric tool, agricultural machinery, hoist, etc.	4 000 – 8 000
Discontinuously but for a long period	Factory motor, general gear, etc.	12 000 – 20 000
Always operated for 8 hours or longer a day or operated continuously for a long period	General machinery, blower, etc.	20 000 – 30 000
Operated continuously for 24 hours, no fault is allowed	Electric power plant facility, mine drainage facility, etc.	100 000 –200 000

4.3 Grease life

Grease life of a ball bearing for ball bearing unit is influenced by the level of load, rotational speed of bearing, and operating temperature.

Grease life of a ball bearing for unit used under appropriate operating conditions can be found by the formula shown below.

$$\log L = 6.10 - 4.40 \times 10^{-6}\, d_m n - 2.50 \left(\frac{P_r}{C_r} - 0.05\right) - (0.021 - 1.80 \times 10^{-8}\, d_m n)\, T \quad \cdots\cdots (4.7)$$

Whereas,

L : Grease life — h

d_m : Pitch dia. of ball set — mm

$$d_m = \frac{(D + d)}{2}$$

(D : Nominal bearing outer dia., d : Nominal bearing bore dia.)

n : Rotational speed of bearing — min^{-1}

P_r : Dynamic equivalent radial load (see **"5 Bearing load"**) — N

C_r : Basic dynamic radial load rating of bearing — N

T : Operating temperature of bearing — °C

Applicable conditions for the **Formula (4.7)** are shown below.

1) Operating temperature of bearing : T °C

To be applied if the following condition is satisfied : $T \leqq 100$

(If T is smaller than 50 ($T < 50$), following condition should be applied : $T = 50$.)

If T is larger than 100 ($T > 100$), contact JTEKT.

2) Rotationl speed of bearing : $d_m n$

To be applied if the following condition is satisfied : $d_m n \leqq 30 \times 10^4$

(If $d_m n$ is smaller than 12.5×10^4 ($d_m n < 12.5 \times 10^4$), following condition should be applied : $d_m n = 12.5 \times 10^4$)

If $d_m n$ is larger than 30×10^4 ($d_m n > 30 \times 10^4$), contact JTEKT.

3) Load condition of bearing : $\frac{P_r}{C_r}$

To be applied if the following condition is satisfied : $\frac{P_r}{C_r} \leqq 0.2$

(If $\frac{P_r}{C_r}$ is smaller than 0.05 ($\frac{P_r}{C_r} < 0.05$), following condition should be applied : $\frac{P_r}{C_r} = 0.05$)

If $\frac{P_r}{C_r}$ is larger than 0.2 ($\frac{P_r}{C_r} > 0.2$), contact JTEKT.

Reference figure of grease life obtained by the **Formula (4.7)** is shown in **Fig. 4.2**.

(1) Bearing load · $\frac{P_r}{C_r} = 0.05$

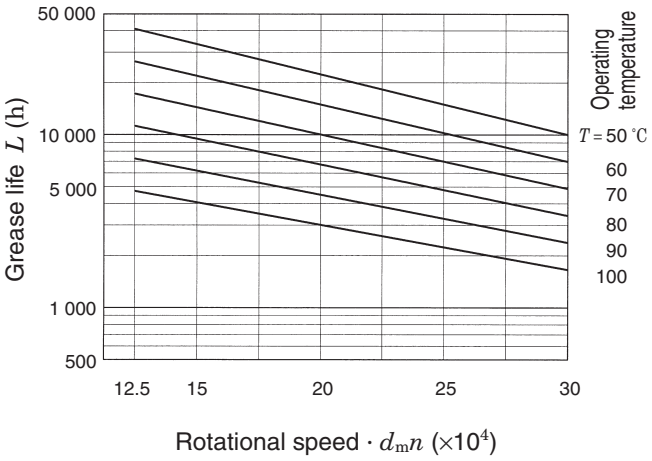

(2) Bearing load · $\frac{P_r}{C_r} = 0.125$

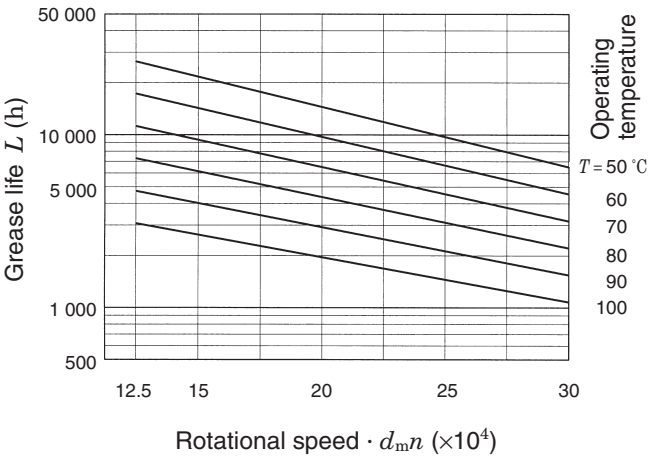

(3) Bearing load · $\frac{P_r}{C_r} = 0.2$

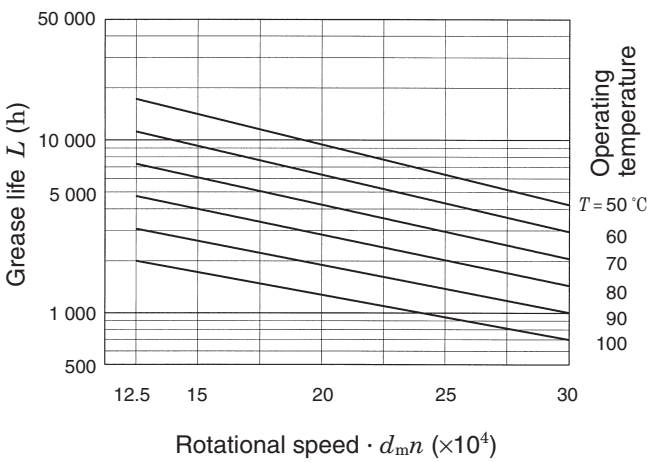

Fig. 4.2 Relation of grease life to bearing load, rotational speed, and operating temperature (reference)

5 Bearing load

As for the loads applied to a bearing, load caused by weight of object supported by the bearing, transmitting force of gears and belts, load generated in the machine operated are included. In many cases, these loads cannot be found out by simple calculation.

Because the loads are not fixed but fluctuated, and it is difficult to fix the level and direction of the fluctuations.

Therefore, in general, to find the loads applied to a bearing, the following steps are adopted : multiply the load to be able to be found theoretically by various factors obtained empirically.

5.1 Loads applied to bearing

5.1.1 Load factor

Even if radial load and axial load to be applied to a bearing can be found by standard dynamical calculation, loads actually applied to the bearing are greater than the calculated values because of vibration and impact generated while machine is being operated.

To find the loads actually applied to a bearing, multiply the theoretically found values by load factor.

$$F = f_w \cdot F_c \quad \cdots\cdots (5.1)$$

Whereas,

F : Load actually applied to bearing N

F_c : Theoretically calculated load N

f_w : Load factor (see **Table 5.1**)

Table 5.1 Load factor f_w

Operating conditions	Applications	f_w
Virtually no vibration or impact	Electric machines and instruments	1 – 1.2
Standard operation (weak impact)	Agricultural machines and blower	1.2 – 2
Great vibration and impact	Constructive machines and grinder	2 – 3

5.1.2 Loads in case of belt or chain transmission

As for belt transmission, theoretical load applied to the pulley shaft can be found by effective transmission force of belt. Actually, the effective transmission force must be multiplied by load factor (f_w) obtained with taking vibration and impact generated while machine is being operated into consideration and belt factor (f_b) with taking belt tension into consideration.

As for chain transmission, factor equivalent to the belt factor for belt transmission must be multiplied.

$$F_b = \frac{2M}{D_p} \cdot f_w \cdot f_b$$

$$= \frac{19.1 \times 10^6 W}{D_p \cdot n} \cdot f_w \cdot f_b \quad \cdots\cdots (5.2)$$

Whereas,

F_b	: Load actually applied to pulley shaft or sprocket shaft	N
M	: Torque applied to pulley or sprocket	mN · m
W	: Transmitted power	kW
D_p	: Pitch circle dia. of pulley or sprocket	mm
n	: Rotational speed	min^{-1}
f_w	: Load factor (see **Table 5.1**)	
f_b	: Belt factor (see **Table 5.2**)	

Table 5.2 Belt factor f_b

Belt type	f_b
Toothed belt	1.3 – 2
V belt	2 – 2.5
Flat belt (with tension pulley)	2.5 – 3
Flat belt	4 – 5
Chain	1.2 – 1.5

5.1.3 Load in case of gear transmission

As for gear transmission, load in tangential direction (K_t), load in radial direction (K_r), and axial load (K_a) are included as the theoretical loads applied to a gear. They can be dynamically found by transmission force and gear type.

The followings show the example of standard flat gear (as for flat gear, no axial load applied is expected.).

(1) Load applied to gear in tangential direction (tangential line force)

$$K_t = \frac{2M}{D_p} = \frac{19.1 \times 10^6 W}{D_p n} \quad \cdots\cdots (5.3)$$

(2) Load applied to gear in radial direction (separating force)

$$K_r = K_t \tan \alpha \quad \cdots\cdots (5.4)$$

(3) Synthetic load applied to gear

$$K_g = \sqrt{K_t^2 + K_r^2} = K_t \sec\alpha \quad \cdots\cdots (5.5)$$

Whereas,

K_t	: Load applied to gear in tangential direction (tangential line force)	N
K_r	: Load applied to gear in radial direction (separating force)	N
K_g	: Synthetic load applied to gear	N
M	: Torque applied to gear	mN · m
D_p	: Pitch circle dia. of gear	mm
W	: Transmission power	kW
n	: Rotational speed	min^{-1}
α	: Pressure angle of gear	deg

Note that the actual gear load must be found by multiplying the theoretical load by load factor (f_w) obtained with taking vibration and impact generated while machine is being operated into consideration and gear factor (f_g) with taking accuracy and finish of gear into consideration.

$$F_g = f_w \cdot f_g \cdot K_g \quad \cdots\cdots (5.6)$$

Whereas,

F_g	: Load actually applied to gear	N
K_g	: Theoretically synthetic load applied to gear	N
f_w	: Load factor (see **Table 5.1**)	
f_g	: Gear factor (see **Table 5.3**)	

Table 5.3 Gear factor f_g

Gear type	f_g
Precision gear (both pitch error and tooth profile error should be 0.02 mm or less)	1 – 1.1
Standard gear (both pitch error and tooth profile error should be 0.1 mm or less)	1.1 – 1.3

5.2 Distribution of load to bearing

To distribute the load applied to the shaft system into the bearing which supports the shaft, find the radial component force of each load, and calculate the vector sum in accordance with the direction of load. **Fig. 5.1** shows the example of distribution of radial load.

In many cases, a bearing bears radial load as well as axial load, leading to synthetic loads. In such a case, convert it into dynamic equivalent load, and consider it as the bearing load.

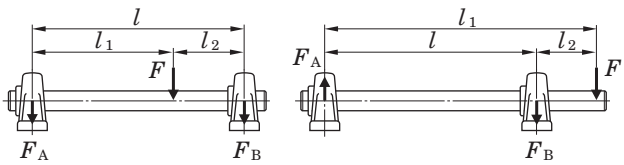

$$F_A = \frac{l_2}{l} \cdot F \quad \cdots\cdots (5.7)$$

$$F_B = \frac{l_1}{l} \cdot F \quad \cdots\cdots (5.8)$$

Fig. 5.1 Distribution of load to bearing

5.3 Dynamic equivalent load

In many cases, a bearing is exposed to the synthetic load of radial load and axial load, and it is used under various conditions, including fluctuated load thus, the load actually applied to the bearing cannot be directly compared to the basic dynamic load rating.

In such a case, find the load running the bearing center in a fixed level and direction that allows the same bearing life as the actual bearing load and rotational speed. Then, compare it with the basic dynamic load rating.

The converted virtual load is called dynamic equivalent load (P).

5.3.1 Calculation of dynamic equivalent load

The dynamic equivalent radial load (P_r) of a radial bearing (ball bearing for unit is included) that bears the synthetic load in a fixed level and direction can be found by the formula shown below.

$$P_r = XF_r + YF_a \quad \cdots\cdots (5.9)$$

Whereas,

P_r	: Dynamic equivalent radial load	N
F_r	: Radial load	N
F_a	: Axial load	N
X	: Radial load factor (see **Table 5.4**)	
Y	: Axial load factor (see **Table 5.4**)	

Table 5.4 Radial load factor (X) and axial load factor (Y)

$\frac{f_0 F_a}{C_{0r}}$	e	$F_a / F_r \leqq e$		$F_a / F_r > e$	
		X	Y	X	Y
0.172	0.19				2.30
0.345	0.22				1.99
0.689	0.26				1.71
1.03	0.28				1.55
1.38	0.30	1	0	0.56	1.45
2.07	0.34				1.31
3.45	0.38				1.15
5.17	0.42				1.04
6.89	0.44				1.00

[Remarks] 1. C_{0r} (basic static radial load rating) and f_0 (factor) are shown in the dimensional tables.

2. If $f_0 F_a / C_{0r}$ does not conform to the table above, find by interpolation.

5.3.2 Mean dynamic equivalent load in case of fluctuated load

If level or direction of the load applied to a bearing is fluctuated, it is necessary to find the mean dynamic equivalent load to allow the same bearing life as that under actual fluctuated conditions.

Table 5.5 shows the method of finding the mean dynamic equivalent load under various fluctuated conditions.

Table 5.5 Calculation of mean dynamic equivalent load in case of fluctuated load

(1) Staged fluctuation

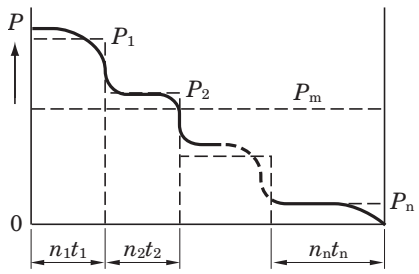

$$P_m = \sqrt[p]{\frac{P_1^p\, n_1t_1 + P_2^p\, n_2t_2 + \cdots\cdots + P_n^p\, n_nt_n}{n_1t_1 + n_2t_2 + \cdots\cdots + n_nt_n}} \quad \cdots\cdots (5.10)$$

(2) Stageless fluctuation

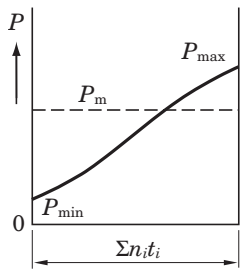

$$P_m = \frac{P_{min} + 2\,P_{max}}{3} \quad \cdots\cdots (5.11)$$

(3) Sine curve fluctuation

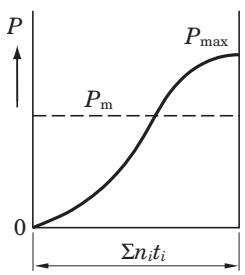

$$P_m = 0.68\,P_{max} \quad \cdots\cdots (5.12)$$

(4) Sine curve fluctuation (upper half of sine curve)

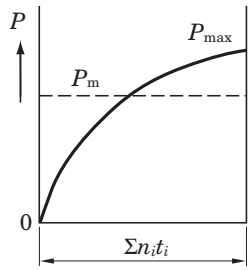

$$P_m = 0.75\,P_{max} \quad \cdots\cdots (5.13)$$

Whereas,

P_m : Mean dynamic equivalent load N

P_1 : Dynamic equivalent load actuating for t_1 hours at rotational speed of n_1 N

P_2 : Dynamic equivalent load actuating for t_2 hours at rotational speed of n_2 N

.
.
.

P_n : Dynamic equivalent load actuating for t_n hours at rotational speed of n_n N

P_{min} : Minimum dynamic equivalent load N

P_{max} : Maximum dynamic equivalent load N

Σn_it_i : Total rotating frequency for t_1 to t_i hours

5.4 Basic static load rating and static equivalent load

5.4.1 Basic static load rating

If a bearing is exposed to excessive static load or impact load even under extra low rotational speed, partial permanent deformation occurs to the contact surface of the raceway of bearing with the rolling element. The permanent deformation increases with the increase of load, and when it exceeds a fixed level, smooth rotation of the bearing is interfered.

Basic static load rating of a bearing is the static load to generate the calculated contact stress shown below at the center of contact surface of the raceway the maximum load is applied and the rolling element.

(1) Self-aligning ball bearing ..... 4 600 MPa
(2) Other ball bearings
(ball bearing for unit is included) ..... 4 200 MPa
(3) Roller bearing ..... 4 000 MPa

The total permanent deformation of bearing raceway and rolling element to be generated under these contact stresses are 0.000 1 times of the diameter of rolling element.

In the ball bearing for unit, it is indicated as the **basic static radial load rating** (C_{0r}), and the values are shown in the dimensional tables.

5.4.2 Static equivalent load

Static equivalent load is the virtual load converted into the level that allows the generation of the same contact stress at the contact face of the raceway of bearing and rolling element that are exposed to the maximum stress as the contact stress under the actual load conditions, when a bearing is stopped or rotated at extra low speed.

Static equivalent radial load (P_{or}) of the ball bearing for unit can be calculated by the formula below (use greater value).

$$P_{0r} = 0.6F_r + 0.5F_a \quad \cdots\cdots (5.14)$$

$$P_{0r} = F_r \quad \cdots\cdots (5.15)$$

Whereas,

P_{0r} : Static equivalent radial load N

F_r : Radial load N

F_a : Axial load N

5.4.3 Safety factor

The static equivalent load allowed by a bearing depends on the basic static load rating of the bearing, and the limitation of use of bearing by the permanent deformation (partial dent) of the bearing depends on the performance required for the bearing or operating conditions.

Therefore, in order to examine the safety of the basic static load rating of the bearing, safety factor is defined taking conventional experiences into consideration.

$$f_s = \frac{C_{0r}}{P_{0r}} \quad \cdots\cdots (5.16)$$

Whereas,

f_s : Safety factor (see **Table 5.6**)

C_{0r} : Basic static radial load rating N

P_{0r} : Static equivalent radial load N

Table 5.6 Safety factor f_s (recommended)

Operating conditions		f_s (Min.)
Being rotated	High rotating accuracy is required	2
	Standard operating conditions	1
	Impact	1.5
Not always being rotated (sometimes oscillated)	Standard operating conditions	0.5
	Impact, unevenly distributed load	1

5.5 Example of applied calculation

Example 1 Distributing load

Find the load applied to the bearing A and bearing B, if the radial load F_1 (F_1 = 1.5 kN) and F_2 (F_2 = 4.5 kN) are applied.

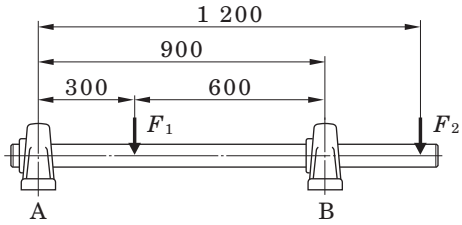

(1) Find the radial load F_{1A} applied to the bearing A by F_1, with **Formulas (5.7)** and **(5.8)**.

$$F_{1A} = \frac{600}{900} \times 1.5 = 1.0 \text{ (kN)}$$

In a similar manner, find the radial load F_{2A} applied to the bearing A by F_2.

$$F_{2A} = -\frac{1\,200 - 900}{900} \times 4.5 = -1.5 \text{ (kN)}$$

[Remark] Negative load is the upward load.

Radial load F_A applied to the bearing A :

$$F_A = F_{1A} + F_{2A} = 1.0 + (-1.5) = -0.5 \text{ (kN)}$$

(2) In a similar manner to (1), find the radial load F_B applied to the bearing B.

$$F_{1B} = \frac{300}{900} \times 1.5 = 0.5 \text{ (kN)}$$

$$F_{2B} = \frac{1\,200}{900} \times 4.5 = 6.0 \text{ (kN)}$$

$$F_B = F_{1B} + F_{2B} = 0.5 + 6.0 = 6.5 \text{ (kN)}$$

Example 2 Calculating load by V-belt transmission

Find the load applied to the bearing A and bearing B when the shaft is driven by the V-belt, transmission power W is 7.5 kW (W = 7.5 kW), rotational speed n is 300 $\mathrm{min^{-1}}$ (n = 300 $\mathrm{min^{-1}}$), effective diameter of pulley D_p is 300 mm (D_p = 300 mm).

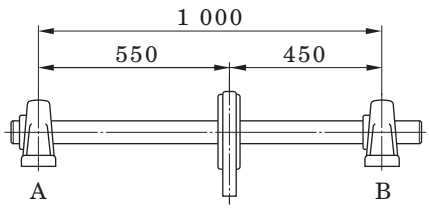

(1) Find the load actually applied to the pulley shaft F_b with **Formula (5.2)**.

From **Table 5.1**, load factor f_w is 1.2 (f_w = 1.2), and the belt factor f_b is 2.5 (f_b = 2.5), from **Table 5.2**.

$$F_b = \frac{19.1 \times 10^6\, W}{D_p \cdot n} \cdot f_w \cdot f_b$$

$$= \frac{19.1 \times 10^6 \times 7.5}{300 \times 300} \times 1.2 \times 2.5 = 4.78 \text{ (kN)}$$

(2) Find the load actually applied to the bearing A and bearing B (F_A and F_B) with **Formulas (5.7)** and **(5.8)**.

$$F_A = \frac{450}{1\,000} \times 4.78 = 2.15 \text{ (kN)}$$

$$F_B = \frac{550}{1\,000} \times 4.78 = 2.63 \text{ (kN)}$$

Example 3 Calculating dynamic equivalent radial load

Find the dynamic equivalent radial load P_r when the radial load F_r, 1.5 kN (F_r = 1.5 kN), and the axial load F_a, 0.85 kN, (F_a = 0.85 kN) are applied to the pillow block type unit UCP306J (bearing UC306).

(1) Find the radial load factor (X) and the axial load factor (Y) with using the static radial load rating C_{0r} of UCP306J (bearing UC306), 15.0 kN (C_{0r} = 15.0 kN), and **Table 5.4**.

$$\frac{f_0 F_a}{C_{0r}} = \frac{13.3 \times 0.85}{15.0} = 0.754,\ e = 0.264$$

$$\frac{F_a}{F_r} = \frac{0.85}{1.5} = 0.567 > e\ (0.264)$$

Therefore, X = 0.56, Y = 1.68

(2) Find the dynamic equivalent radial load P_r with **Formula (5.9).**

$$P_r = XF_r + YF_a = 0.56 \times 1.5 + 1.68 \times 0.85$$

$$= 2.27 \text{ (kN)}$$

Example 4 Calculating bearing life

Under the conditions shown in the **Example 3**, find the bearing life L_{10h} when a bearing is used for a blower of the rotational speed n, 1 000 $\mathrm{min^{-1}}$.

(1) Select the load factor f_w is 1.2 (f_w = 1.2) from **Table 5.1**, and find the bearing load P_r.

$$P_r = f_w \cdot F = 1.2 \times 2.27 = 2.72 \text{ (kN)}$$

(2) The dynamic radial load rating of UCP306J (bearing UC306), C_r, is 26.7 kN (C_r = 26.7 kN), and calculate the bearing life L_{10h} with the **Formula (4.2)**.

$$L_{10h} = \frac{10^6}{60n} \cdot \left(\frac{C_r}{P_r}\right)^3 = \frac{10^6}{60 \times 1\,000} \times \left(\frac{26.7}{2.72}\right)^3$$

$$\fallingdotseq 15\,800 \text{ (h)}$$

(3) Calculate bearing life L_{10h} with the nomogram shown in **Fig. 4.1**.

When the rotational speed n is 1 000 $\mathrm{min^{-1}}$ (n = 1 000 $\mathrm{min^{-1}}$), rotational factor f_n is 0.32 (f_n = 0.32). next, find the life factor f_h by speed factor f_n, dynamic radial load rating of bearing C_r, and the bearing load P_r.

$$\text{Life factor } f_h = f_n \cdot \frac{C_r}{P_r} = 0.32 \times \frac{26.7}{2.72}$$

$$= 3.14$$

From life factor f_h, bearing life $L_{10h} \fallingdotseq$ 16 000 hours.

Example 5 Selecting ball bearing unit

If a bearing is operated under the following conditions, select the flange type unit (UCF) with at least two years (5 000 hours) or longer service life : rotational speed of shaft n is 1 500 $\mathrm{min^{-1}}$ (n = 1 500 $\mathrm{min^{-1}}$), and radial load F_r is 5 kN (F_r = 5 kN). The radial load F_r includes the load factor and gear factor.

(1) From the nomogram shown in **Fig. 4.1**, when life time L_h is 5 000 h (L_h = 5 000 h), life factor f_h can be found as 2.16 ($f_h \fallingdotseq$ 2.16), and speed factor f_n can be found as 0.28 ($f_n \fallingdotseq$ 0.28) when the rotational speed n is 1 500 $\mathrm{min^{-1}}$ (n = 1 500 $\mathrm{min^{-1}}$).

$$\text{Dynamic radial load rating } C_r = F_r \cdot \frac{f_h}{f_n} = 5 \times \frac{2.16}{0.28}$$

$$\fallingdotseq 38.6 \text{ (kN)}$$

(2) Find the flange type unit that meets the following condition : dynamic radial load rating C_r is 38.6 kN (C_r = 38.6 kN). As for the diameter series 2, UCF211J (dynamic radial load rating C_r is 43.4 kN (C_r = 43.4 kN)) can be selected.

Example 6 Selecting pillow block type unit for low speed

If a bearing is used for a dolly under the following conditions, select the pillow block type unit (UCP) with 10 000 hours service life : radial load F_r is 12 kN (F_r = 12 kN), and rotational speed is 8 min^{-1}.

(1) Find the required dynamic radial load rating C_r with using **Formulas (4.4)** and **(4.5)**.

Speed factor $f_n = (0.03n)^{-1/p} = (0.03 \times 8)^{-1/3} \fallingdotseq 1.61$

Life factor $f_h = \left(\dfrac{L_{10h}}{500}\right)^{1/p} = \left(\dfrac{10\ 000}{500}\right)^{1/3} \fallingdotseq 2.71$

Dynamic radial load rating $C_r = P_r \cdot \dfrac{f_h}{f_n} = 12 \times \dfrac{2.71}{1.61}$

$\fallingdotseq 20.2$ (kN)

(2) From **Table 5.6**, define safe factor f_s as 2 (f_s = 2), and find the static radial load rating of bearing required C_{0r}.

$C_{0r} = f_s \cdot P_r = 2 \times 12 = 24$ (kN)

(3) The unit is used for a dolly, and vibration or impact may occur. Thus, select UCP308J (C_r = 40.7 kN, C_{0r} = 24.0 kN).

Example 7 Calculating bearing life in case of use at high temperature

Find the bearing life if the heat resistant pillow block type unit (UCP215JD1K2) is operated under the following conditions : operating temperature is 175 ºC, radial load F_r is 4 kN (F_r = 4 kN), and the rotational speed n is 800 min^{-1} (n = 800 min^{-1}). Note that the radial load F_r includes load factor and gear factor.

(1) From **Table 4.1**, find the dynamic load rating C_r with in the case that a bearing is used at 175 ºC.

$C_r = 67.4 \times 0.95 = 64.0$ (kN)

Find the bearing life L_{10h} with using **Formula (4.2)**.

$$L_{10h} = \frac{10^6}{60n} \cdot \left(\frac{C_r}{P_r}\right)^3 = \frac{10^6}{60 \times 800} \times \left(\frac{64.0}{4}\right)^3$$

$\fallingdotseq 85\ 000$ (h)

(2) If a bearing unit is operated at 175 ºC, grease is degraded faster, and it cannot be used without lubrication. Supply grease at intervals specified in **Table 14.4**.

(3) If the shaft is extended excessively, install a bearing unit on the identical shaft on the fixed side (positioning of shaft), and install another bearing unit on the free side (see **"9 Design of shaft and base"**).

Example 8 Calculating grease life

Find the grease life in the case that pillow block type unit UCP204J (bearing UC204) under the following conditions : radial load F_r is 1 kN (F_r = 1 kN), and rotational speed n is 800 min^{-1} (n = 800 min^{-1}). Note that the radial load F_r includes load factor and belt factor. Operating temperature of the bearing should be 40 ºC.

Find the grease life L with using **Formula (4.7)**.

$$\log L = 6.10 - 4.40 \times 10^{-6}\, d_m n - 2.50 \left(\frac{P_r}{C_r} - 0.05\right)$$
$$- (0.021 - 1.80 \times 10^{-8}\, d_m n)\, T$$
$$= 6.10 - 4.40 \times 10^{-6} \times 12.5 \times 10^4$$
$$- 2.50 \left(\frac{1}{12.8} - 0.05\right)$$
$$- (0.021 - 1.80 \times 10^{-8} \times 12.5 \times 10^4) \times 50$$
$$= 4.542$$
$$L \fallingdotseq 34\ 800 \text{ (h)}$$

Example 9 Calculating life of bearing unit in case of non-lubrication

Find the life of a bearing unit in the case that it is operated under the conditions shown in **Example 8**, but without lubrication.

(1) Find the rating life of bearing L_{10h} with using **Formula (4.2)**.

$$L_{10h} = \frac{10^6}{60n} \cdot \left(\frac{C_r}{P_r}\right)^3 = \frac{10^6}{60 \times 800} \times \left(\frac{12.8}{1}\right)^3$$

$\fallingdotseq 43\ 700$ (h)

(2) Compare the grease life L shown in **Example 8** to the rating life of bearings L_h. Then, grease life L is shorter than the bearing rating life. Therefore, life of a bearing unit should be the same as the grease life L, 34 800 hours (L = 34 800 hours).

6 Allowable rotational speed

6.1 Allowable rotational speed

The rotational speed of a bearing is normally affected by friction heat generated in the bearing. If the heat exceeds a certain amount, seizure or other failures occur, thus causing rotation to be discontinued.

The allowable rotational speed is the highest speed at which a bearing can continuously operate without generating such critical heat.

Allowable rotational speed of a ball bearing unit depends on the dimensions of the bearing, type of oil seal, and fitting conditions of bearing inner ring and shaft.

Table 6.1 shows the standard allowable rotational speeds of ball bearing units.

Table 6.1 Allowable rotational speed of ball bearing units (standard value)

Unit : min^{-1}

Bore diameter No.	UC type bearing, UC-S6 type bearing, UK type bearing, NA type bearing, ER, RB type bearing										SA type bearing SB type bearing	SU type bearing SU-S6 type bearing
	Standard type, cold resistant type (D2K2)			Triple-lip sealed (L3)			Heat resistant type (D1K2)	Heat resistant type (K3), for blower (S5)				
	Diameter series			Diameter series			Diameter series	Diameter series				
	2	X	3	2	X	3	2, X, 3	2	X	3		
8												10 000
00	–			–			–	–			–	10 000
01	5 800			2 300			3 800	8 700			6 800	8 000
02	5 800			2 300			3 800	8 700			6 800	6 600
03	5 800			2 300			3 800	8 700			6 800	5 800
04	5 800	–	–	2 300	–		3 800	8 700	–	–	5 800	5 000
05	5 100	4 300	4 600	2 100	960		3 000	7 700	6 400	6 700	5 100	4 000
06	4 300	3 700	3 900	960	830	–	2 500	6 400	5 500	5 800	4 300	3 300
07	3 700	3 300	3 400	830	750	770	2 100	5 500	5 000	5 100	3 700	–
08	3 300	3 100	3 100	750	690	690	1 900	5 000	4 600	4 600	3 300	
09	3 100	2 800	2 700	690	640	620	1 700	4 600	4 300	4 100	3 100	
10	2 800	2 500	2 400	640	570	550	1 500	4 300	3 800	3 700	2 800	
11	2 500	2 300	2 300	570	520	510	1 400	3 800	3 500	3 400		
12	2 300	2 200	2 100	520	490	470	1 300	3 500	3 200	3 100		
13	2 200	2 100	1 900	490	460	440	1 200	3 200	3 100	2 900		
14	2 100	2 000	1 800	460	440	410	1 100	3 100	2 900	2 700		
15	2 000	1 800	1 700	440	410	380	1 000	2 900	2 700	2 600		
16	1 800	1 700	1 600	410	380	360	940	2 700	2 600	2 400		
17	1 700	1 600	1 500	380	360	340	880	2 600	2 400	2 300		
18	1 600	1 500	1 400	360	340	320	830	2 400	2 300	2 100		
19	–	–	1 400	–	–	310	790	–	–	2 000		
20		1 300	1 300		300	280	750		2 000	1 900		
21		–	1 200		–	–	710		–	1 800		
22			1 100			250	680			1 700		
24			1 100			240	630			1 600		
26			1 000			220	580			1 500		
28			910			200	540			1 400		

[Remarks] 1. Allowable rotational speed of the units with covers is 80% of the value shown in the table above.

2. If a bearing unit is used with excessively loose fitting, allowable rotational speed must be corrected by multiplying it by the fitting factor f_c shown in **Table 6.2**.

6.2 Correction of allowable rotational speed by fitting

For easier installation of a ball bearing unit to a shaft, clearance fit is used for a bearing inner ring and shaft, in general. Size of fitting clearance between the bearing inner ring and the shaft is related to the allowable rotational speed of the bearing unit. As the rotational speed is increased, the fitting clearance between the bearing inner ring and the shaft should be decreased.

Table 6.2 shows the fitting factors to correct the allowable rotational speed depending on the types of fitting of the bearing inner ring to the shaft.

As for the bearings with set screws, allowable rotational speed must be corrected by multiplying the allowable rotational speed (standard value) by fitting factor, depending on the tolerance class of the shaft used. For the bearings with adapter, shafts of h8 or h9 tolerance class are recommended, while shafts of h5 or j5 tolerance class are recommended for the bearings with eccentric locking collar.

Table 6.2 Fitting factor of ball bearing unit f_c (recommended)

Type of ball bearing unit	Fitting factor f_c					
	Shaft tolerance class					
	h5, j5	j6	h6	h7	h8	h9
With set screw						
Standard type	–	1.0	1.0	0.8	0.5	0.2
Triple-lip seal type (Supplementary code L3)	–	–	–	1.0	1.0	0.9
Heat resistant type (Special code D1K2)	–	–	–	1.0	1.0	0.7
Cold resistant type (Special code D2K2)	–	–	–	1.0	1.0	0.7
For high speed (Special code K3)	–	1.0	0.8	0.6	–	–
For blower (Special code S5)	1.0	–	0.8	0.6	–	–
With adapter	–	–	–	–	1.0	1.0
With eccentric locking collar	1.0	–	–	–	–	–

7 Operating temperature and bearing specifications

7.1 Operating temperature range

Operating temperature range of a ball bearing unit depends on the type of grease used for the bearing, oil seal rubber material, and the internal clearance of the bearing.

Koyo Ball Bearing Units are available in heat resistant unit (special code : D1K2) and cold resistant unit (special code : D2K2) series, as well as standard types, to allow selection optimal for the operating temperature (see **Table 2.3**).

Even though the bearing unit suitable for temperature is used, grease must be fed in accordance with the specified standards, since grease life greatly depends on temperature.

7.2 Operating temperature and internal clearance of bearing

If the temperature of transmission heat to the shaft is high or hot steam enters the hollow bore of the shaft, difference between the temperatures of the bearing inner and outer rings is increased and the internal clearance of the bearing is decreased, leading to breakage at early stages of the bearing sevice life.

Decrease in the internal clearance of the bearing depending on the difference in the temperatures of the bearing inner ring and the bearing outer ring can be found by **Formula (7.1)**.

Under these conditions, decrease in the internal clearance must be calculated, and the internal clearance of bearing needs to be selected properly.

$$S_{t1} = \alpha \cdot D_e \cdot \Delta_t \quad \cdots\cdots (7.1)$$

Whereas,

S_{t1} : Decrease in the internal clearance of bearing depending on the difference in the temperatures of the bearing inner ring and the bearing outer ring mm

α : Line expansion factor of bearing steel 12.5×10^{-6}

D_e : Raceway dia. of bearing outer ring mm

Diameter series 2, X ····· $D_e \fallingdotseq 0.92\,D$

Diameter series 3 ····· $D_e \fallingdotseq 0.9\,D$

D : Nominal bearing outer dia. mm

Δ_t : Difference in temperatures of bearing inner ring and outer ring °C

If a ball bearing unit is used at a high temperature, abnormal axial load may be applied to the bearing due to axial extension of the shaft caused by high temperature, leading to breakage at early stages of the bearing service life. This fact must be taken into consideration, as well as the internal clearance of the bearing for use of the bearing at a high temperature.

The shaft of free side unit or the unit needs to be able to be moved axially, as the countermeasure against this problem.

(See **"9 Design of shaft and base"**)

8 Strength of housing

The housing for Koyo Ball Bearing Unit reliably withstands use under standard operating conditions, because of selection of good material and the highly tough design suitable to the load capacity of the bearing. However, if a great or impact loads occurs at a low rotational speed, strength of the bearing must be examined in advance, for the purpose safety is especially required.

Although the form of the housing is designed so that it is applicable to various purposes, destruction strength varies depending on the direction of load. Therefore, mounting direction of the bearing unit must be fully examined, as well as the strength of the housing.

At this time, setting of fixing device to support the housing is required depending on the direction or level of load.

Rigidity of the base and flatness of the mounting surface give influence on the strength of the housing. Note that the load applied to the ball bearing unit is recommended to be basically examined by the calculation result of bearing life even if the strength of the housing is satisfied.

8.1 Strength of cast iron housing

Though gray cast iron has many superior features as machine parts material, it is fragile against impact load. Therefore, prior to use of it, level, direction, and property of load applied to it must be fully examined.

Allowable load of gray cast iron housing can be found by using static destruction strength of the housing, taking safety factor into consideration.

Table 8.1 shows the safety factor of gray cast iron products against load, and **Fig. 8.1** to **Fig. 8.8** show the outline values of static destruction strength of pillow block type, flanged type and take-up type housings.

Table 8.1 Safety factor of gray cast iron products (recommended)

Property of load	Safety factor of gray cast iron
Static load	4
With vibration	10
With impact	15

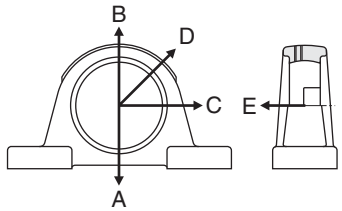

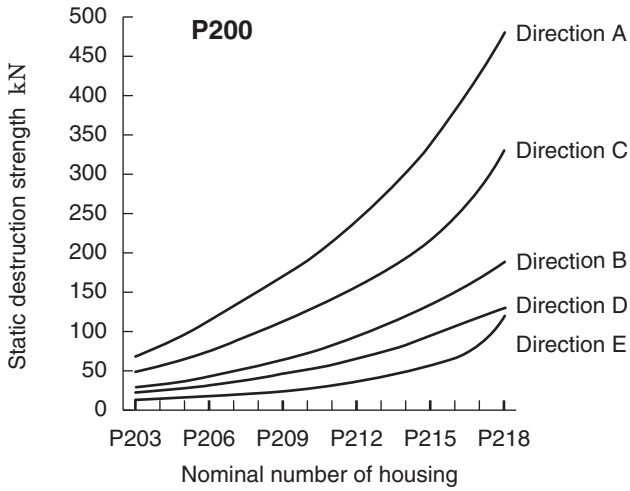

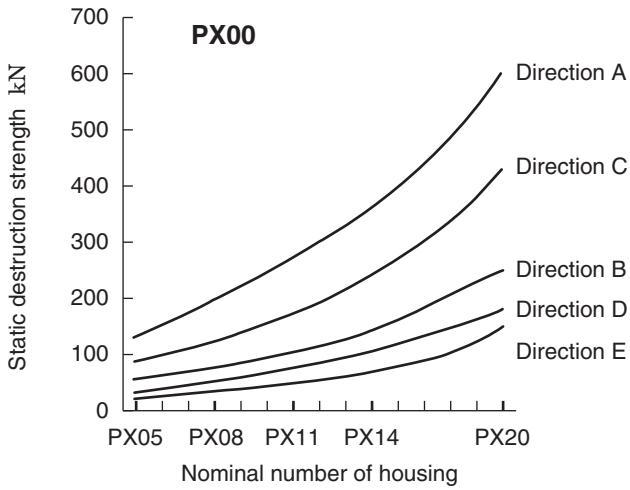

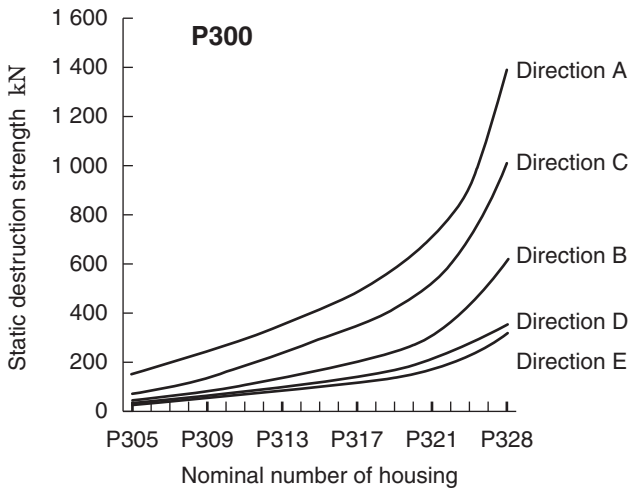

Fig. 8.1 Static destruction strength of pillow block type housing (P)

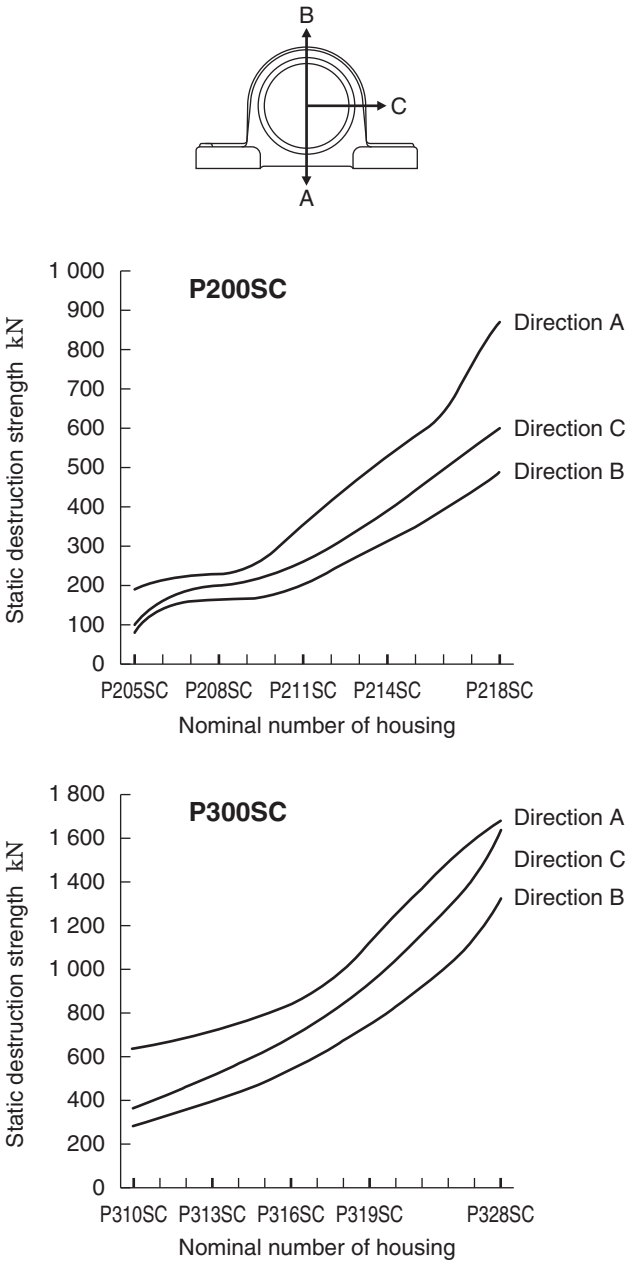

Fig. 8.2 Static destruction strength of cast steel pillow block type housing (Psc)

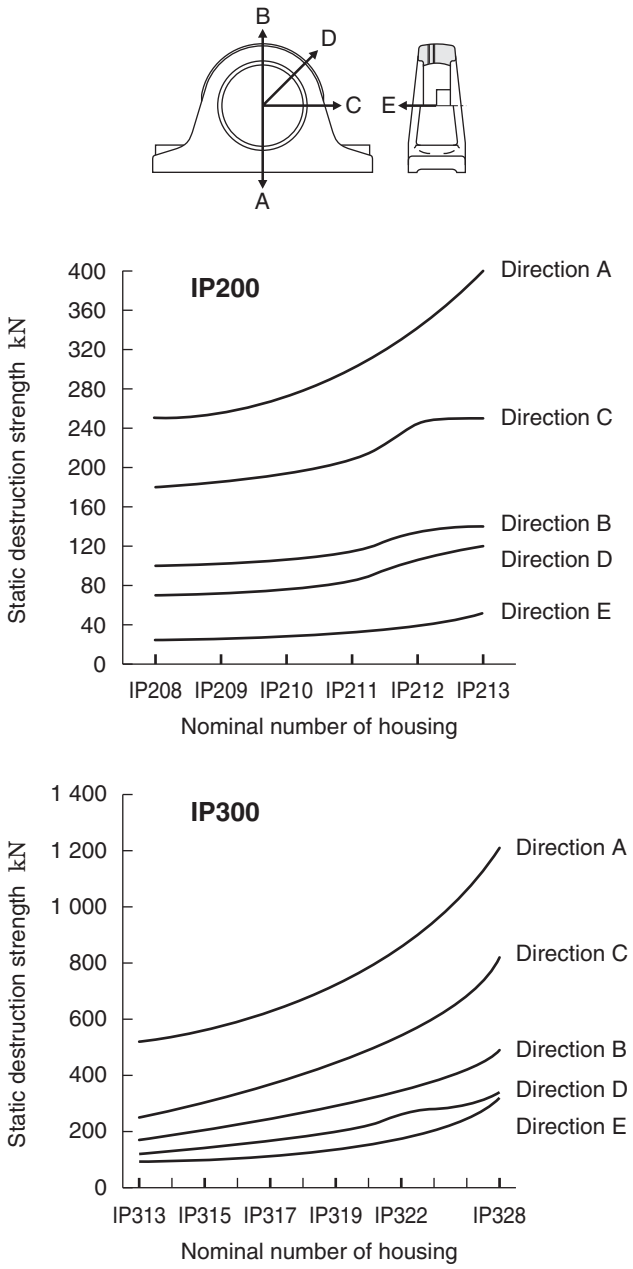

Fig. 8.3 Static destruction strength of thick section pillow block type housing (IP)

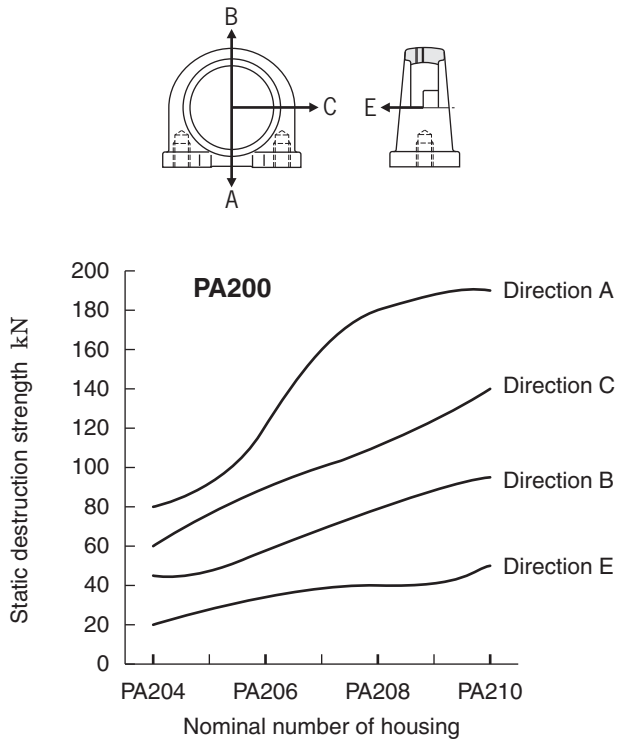

Fig. 8.4 Static destruction strength of tapped-base pillow block type housing (PA)

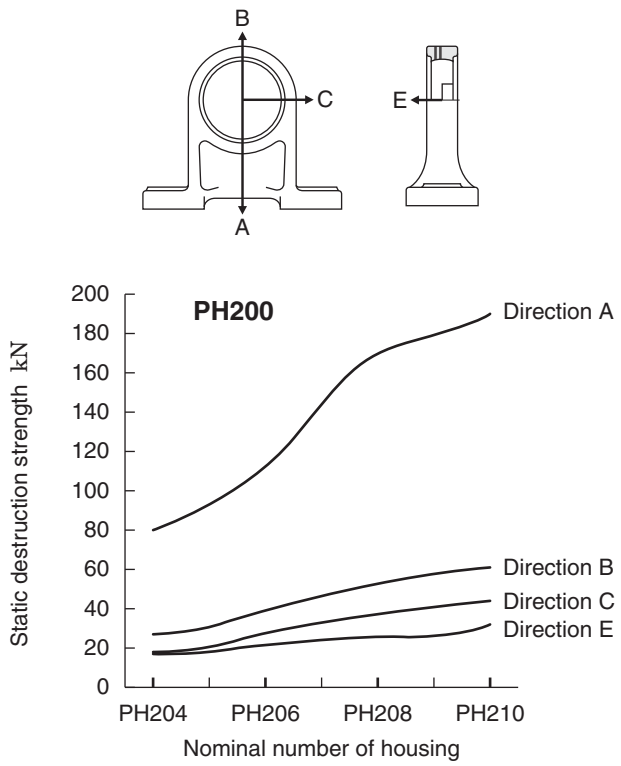

Fig. 8.5 Static destruction strength of higher centerheight pillow block type housing (PH)

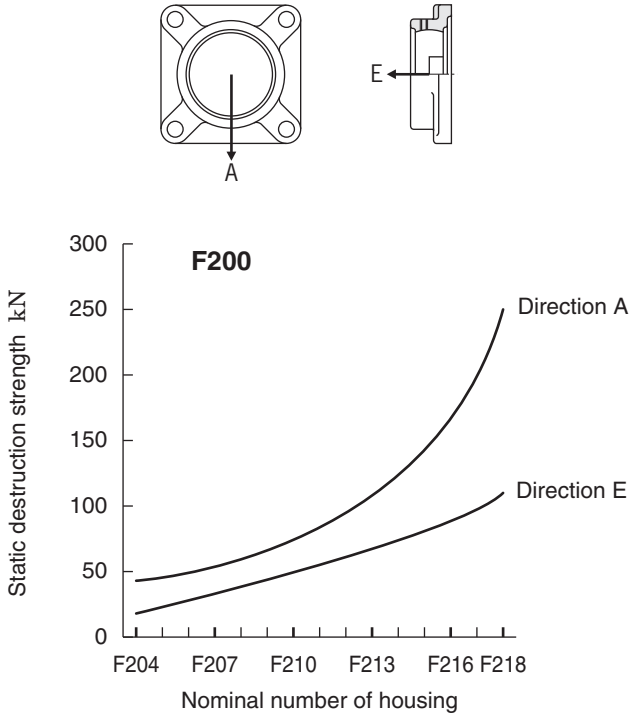

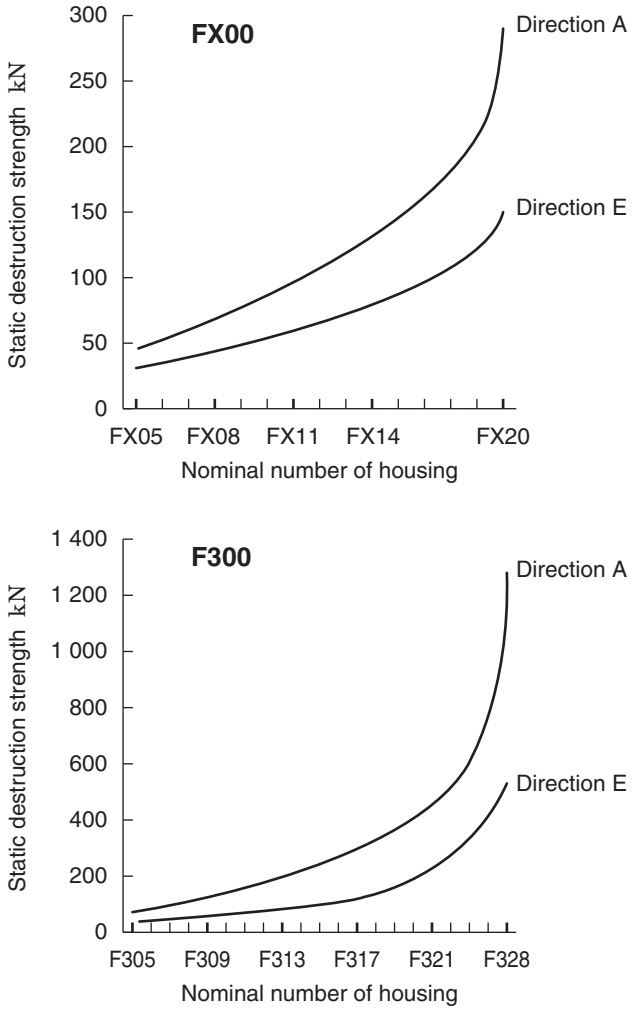

Fig. 8.6 Static destruction strength of square-flanged type housing (F)

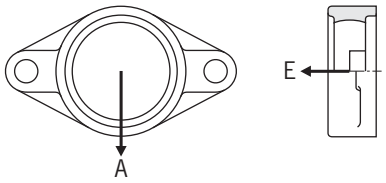

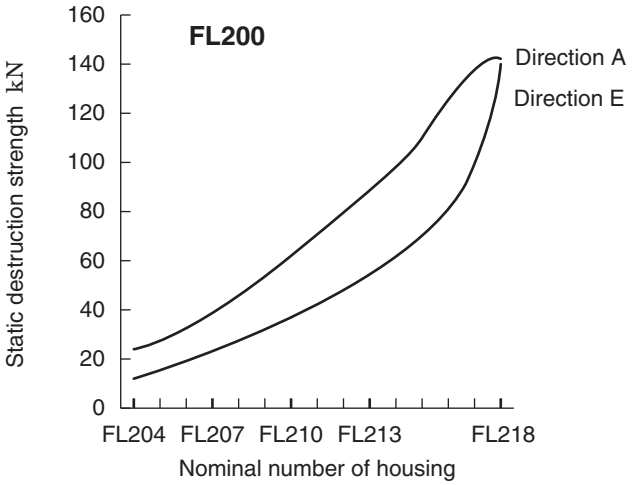

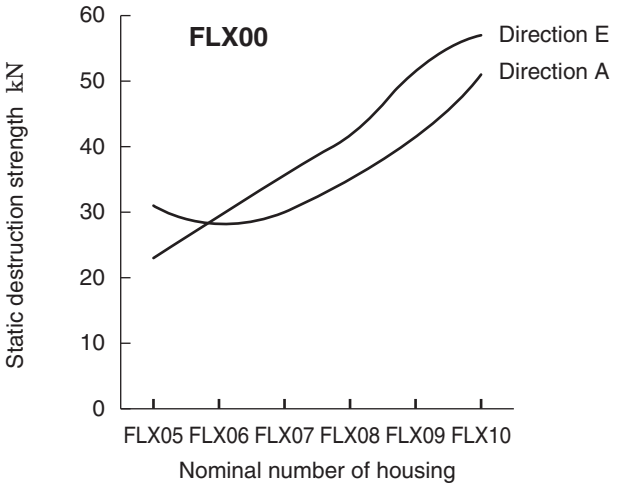

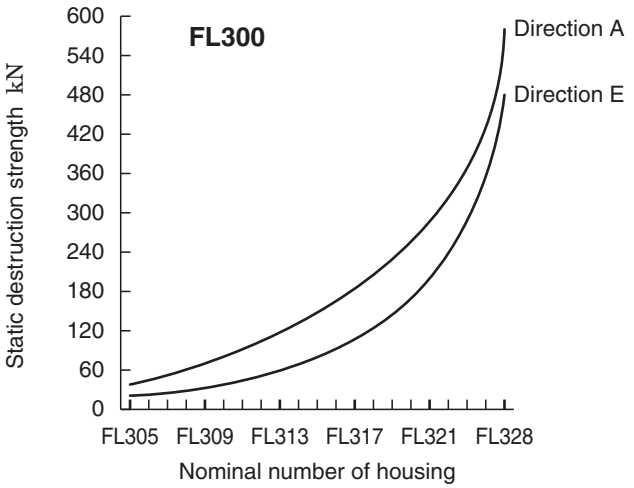

Fig. 8.7 Static destruction strength of rhombic-flanged type housing (FL)

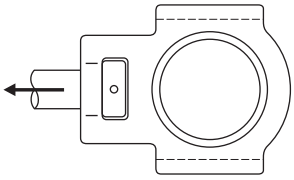

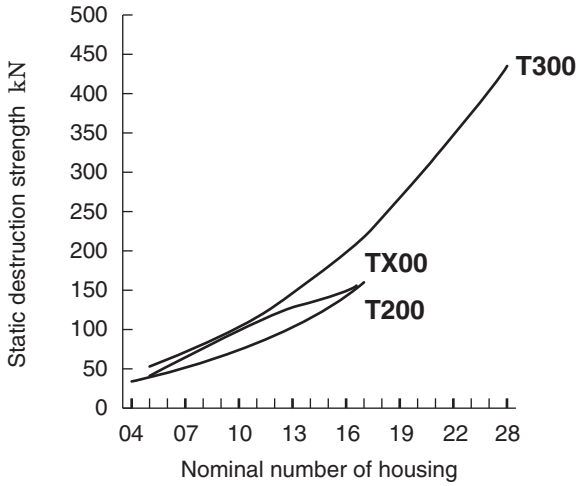

Fig. 8.8 Static destruction strength of take-up type housing (T)

8.2 Strength of cast steel housing

If highly strong housing for ball bearing unit is needed, select the cast steel housing with high destruction strength and superior resistance against impact.

JTEKT supplies the cast steel pillow block type housing (P200sc, P300sc) series.

To find the allowable load of a cast steel housing, use the static destruction strength of a housing, taking safety factor into consideration.

Table 8.2 shows the safety factors for the load of cast steel products, and **Fig. 8.2** shows the outline values of the static destruction strength of a cast steel pillow block type housing.

Table 8.2 Safety factor of cast steel products (recommended)

Property of load	Safety factor of cast steel product
Static load	3
With vibration	5
With impact	10

8.3 Strength of steel housing

The precisely pressed steel housing is highly rigid, but great deformation occurs when load is applied until it is broken. Thus, allowable load of the pressed steel housing must be the value deformation of the housing caused by load does not influence on actual use.

Table 8.3 shows the allowable load of the pressed steel housing.

Table 8.3 Allowable load of pressed steel housing (recommended)

Load direction	Allowable load of pressed steel housing
Radial	Approx. 1/6 of basic dynamic radial load rating of bearing (C_r)
Axial	Approx. 1/18 of basic dynamic radial load rating of bearing (C_r)

8.4 Strength of stainless steel housing

To find the allowable load of a stainless steel housing, use the static destruction strength of a housing, taking safety factor into consideration.

Table 8.4 shows the safety factors for stainless steel products. As for the basic values of the static destruction strength of SP200H1, SPA200H1, SF200H1,SFL200H1, ST200H1 type housings, apply P200 of **Fig. 8.1**, PA200 of **Fig. 8.4**, F200 of **Fig. 8.6**, FL200 of **Fig. 8.7** and T200 of **Fig. 8.8**. For the basic values of the static destruction strength of the SP000 and SFL000 type housings, see P000 of **Fig. 8.9** and FL000 of **Fig. 8.10** and multiply them by 1.5 respectively.

Table 8.4 Safety factor of stainless steel products

Property of load	Safety factor of stainless steel products
Static load	3
With vibration	5
With impact	10

8.5 Strength of "compact" series housing

The "compact" series housing is made of zinc alloy die-cast, but great deformation occurs when load is applied until it is broken.

Table 8.5 shows safety factor for zinc alloy die-cast, and **Fig. 8.9** and **8.10** show the outline values of the static destruction strength of the zinc alloy die-cast housing.

Table 8.5 Safety factor of zinc alloy die-cast products

Property of load	Safety factor of die-cast products
Static load	8
With vibration	15
With impact	20

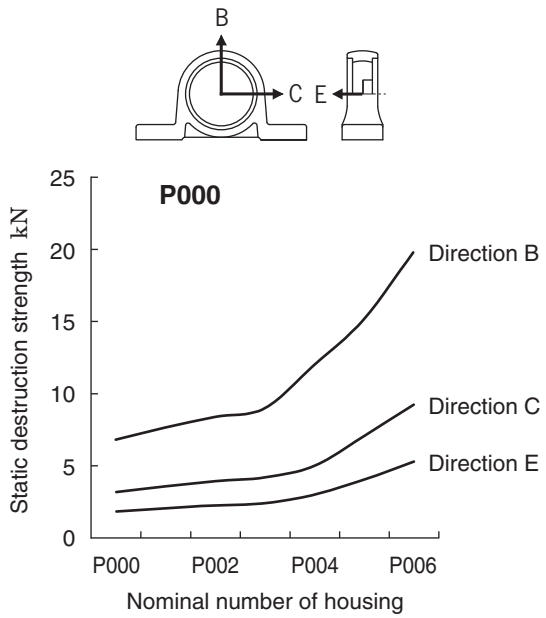

Fig. 8.9 Static destruction strength of "compact" housing (P)

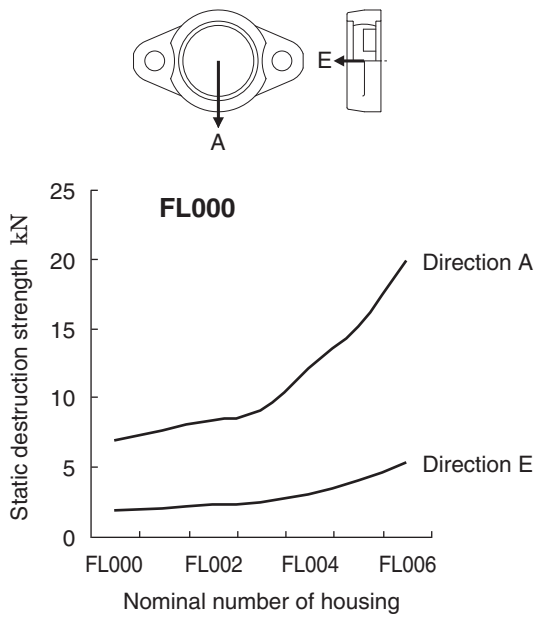

Fig. 8.10 Static destruction strength of "compact" housing (FL)

9 Design of shaft and base

9.1 Design of shaft

For intrinsic performance of a ball bearing unit and maintenance of it for a long time, selection of the shaft optimal for operating conditions is important. Use the shaft with enough rigidity but free from bend, scratch, or burr.

9.1.1 Tolerance of shaft

(1) Tolerance of shaft used for cylindrical bore bearing with set screws

For the cylindrical bore bearing with set screws, use the shaft of the tolerance class leading to relatively loose fitting to simplify the mounting procedures. The fitting clearance between the bearing inner ring and the shaft should be decreased as the rotational speed of the shaft is increased.

Table 9.1 shows the guideline for the tolerance class of the rotational speed of the cylindrical bore bearing with set screws and the shaft used.

If the cylindrical bore bearing with set screws is exposed to heavy load ($P_r / C_r > 0.12$), vibration, or impact, use shaft of the tolerance class leading to relatively tight fitting to prevent creep or fretting to be occurred to the fitting surface of the bearing inner ring and the shaft.

To use tight fitting of the cylindrical bore bearing with set screws, see **Table 9.2** showing the guideline for the tolerance class of the shaft used.

Table 9.3 shows the recommended deviation from circular and cylindrical forms of the shaft used.

Table 9.1 Tolerance of shaft used for cylindrical bore bearing with set screws (recommended) (clearance fitting or transition fitting)

Unit : μm

Shaft diameter (mm)		Tolerance of shaft							
		j6		h6		h7		h8	
over	up to	upper	lower	upper	lower	upper	lower	upper	lower
6	10	+ 7	− 2	0	− 9	0	−15	0	−22
10	18	+ 8	− 3	0	−11	0	−18	0	−27
18	30	+ 9	− 4	0	−13	0	−21	0	−33
30	50	+11	− 5	0	−16	0	−25	0	−39
50	80	+12	− 7	0	−19	0	−30	0	−46
80	120	+13	− 9	0	−22	0	−35	0	−54
120	180	+14	−11	0	−25	0	−40	0	−63
Applicable rotational speed dn 1)		Over 120 000		Over 100 000, up to 120 000		Over 60 000, up to 100 000		up to 60 000	

Note 1) $dn = d$ (bearing bore, mm) $\times n$ (rotational speed, min^{-1})

Table 9.2 Tolerance of shaft used for cylindrical bore bearing with set screws (recommended) (transition fitting or interference fitting)

Unit : μm

Shaft diameter (mm)		Tolerance of shaft					
		k6		k7		m6	
over	up to	upper	lower	upper	lower	upper	lower
6	10	+10	+1	+16	+1	+15	+ 6
10	18	+12	+1	+19	+1	+18	+ 7
18	30	+15	+2	+23	+2	+21	+ 8
30	50	+18	+2	+27	+2	+25	+ 9
50	80	+21	+2	+32	+2	+30	+11
80	120	+25	+3	+38	+3	+35	+13
120	180	+28	+3	+43	+3	+40	+15

Table 9.3 Tolerance of shaft used for ball bearing units (recommended)

Unit : μm

Shaft diameter (mm)		Deviation from circular and cylindrical forms
over	up to	
6	10	6
10	18	8
18	30	9
30	50	11
50	80	13
80	120	15
120	180	18

(2) Tolerance of shaft used for bearing for blower (cylindrical bore with set screws)

In the bearing for blower (special code S5), smaller internal clearance of bearing (C2) and once-class-higher bearing tolerance reduce vibration and noise during high-speed rotation.

Therefore, use of the shaft in the tolerance class shown in **Table 9.4** as the bearing for blower (cylindrical bore with set screws) used is recommended.

Table 9.4 Tolerance of shaft used for bearing for blower (cylindrical bore with set screws) (recommended)

Unit : μm

Shaft diameter (mm)		Tolerance of shaft			
		h5		j5	
over	up to	upper	lower	upper	lower
10	18	0	– 8	+5	– 3
18	30	0	– 9	+5	– 4
30	50	0	–11	+6	– 5
50	80	0	–13	+6	– 7
80	120	0	–15	+6	– 9
120	180	0	–18	+7	–11

(3) Tolerance of shaft used for tapered bore bearing (with adapter)

Since the tapered bore bearing is fixed to a shaft with the adapter, the shaft in the tolerance class allowing relatively loose fitting should be selected, for easier mounting.

Table 9.5 shows the tolerance of shaft used for the tapered bore bearing (with adapter).

Table 9.5 Tolerance of shaft used for tapered bore bearing (with adapter) (recommended)

Unit : μm

Shaft diameter (mm)		Tolerance of shaft			
		h8		h9	
over	up to	upper	lower	upper	lower
18	30	0	–33	0	– 52
30	50	0	–39	0	– 62
50	80	0	–46	0	– 74
80	120	0	–54	0	– 87
120	180	0	–63	0	–100

(4) Tolerance of shaft used for cylindrical bore bearing with eccentric locking collar

As for the cylindrical bore bearing with eccentric locking collar, if the fitting clearance between the bearing inner ring and the shaft is great, the shaft may be installed with being tilted because of its structure.

Therefore, for cylindrical bore bearing with eccentric locking collar, use of the shaft in the same tolerance class (h5 or j5) as that used with the bearing for blower (special code S5) is recommended (see **Table 9.4**).

9.1.2 Dimensions of shouldered shaft

When using the cylindrical bore bearing in the environment exposed to a great axial load, excessive vibration, or impact, adopt the shouldered shaft, and tighten the bearing inner ring with the nut.

Table 9.6 shows the shoulder diameter and the fillet radius of the shouldered shaft.

Table 9.6 Shoulder diameter and fillet radius of shouldered shaft (recommended)

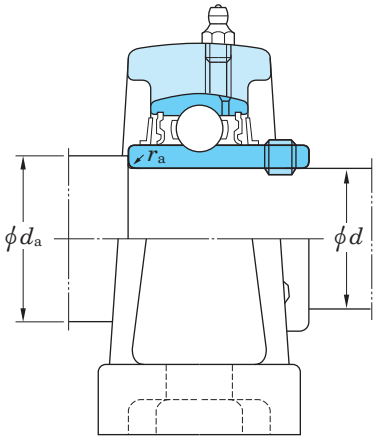

Unit : mm

Bore dia. No.	Nominal bearing bore dia. d	UC200, UCX00		UC300	
		Shoulder dia. d_a	Fillet radius r_a (max.)	Shoulder dia. d_a	Fillet radius r_a (max.)
01	12	17	0.6		
02	15	20	0.6		
03	17	22	0.6		
04	20	30	1	–	–
05	25	35	1	35	1
06	30	40	1	40	1
07	35	45	1	45	1.5
08	40	50	1	50	1.5
09	45	55	1	55	1.5
10	50	60	1	60	2
11	55	65	1.5	65	2
12	60	70	1.5	75	2
13	65	75	1.5	80	2
14	70	80	1.5	85	2
15	75	85	1.5	90	2
16	80	90	2	95	2
17	85	95	2	100	2.5
18	90	100	2	105	2.5
19	95	–	–	110	2.5
20	100	115	2	115	2.5
21	105	–	–	120	2.5
22	110			125	2.5
24	120			135	2.5
26	130			150	3
28	140			160	3

9.1.3 Countermeasures against heat

In general, two or more ball bearing units are used for a shaft. If installation distance for the ball bearings is small or expansion and contraction of the shaft due to temperature are a little, install each of the bearing unit to the fixed side.

However, if installation distance is great and the shaft is exposed to heat, the shaft to be installed should be positioned with a bearing unit to be on the fixed side, and another bearing unit should be installed with it to be on the free side.

Because, if the shaft is exposed to heat, it is expanded in the axial direction, leading to a great axial load to the bearing, and it causes premature breakage of the bearing. Therefore, expansion of the shaft is absorbed by the bearing unit on the free side.

Formula (9.1) shows the relation of temperature increase to expansion of the shaft.

$$\Delta_\ell = \alpha \cdot \Delta_t \cdot l \quad \cdots\cdots (9.1)$$

Whereas,

Δ_ℓ	: Expansion of shaft	mm
α	: Linear expansion coefficient of shaft in the case of standard steel	$11 \sim 12 \times 10^{-6}$
Δ_t	: Temperature increase	ºC
l	: Installation distance of unit	mm

Countermeasures against great expansion of shaft as a result of exposure to heat are shown below.

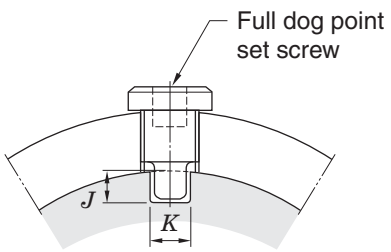

(1) Installation with full dog point set screw on the free side

If the shaft is exposed to heat and expanded in axial direction, the bearing unit must be installed so that it or the shaft can freely move in axial direction.

If the rotational speed is relatively slow, provide the shaft with key groove, attach the full dog point set screw (special code G6) to the bearing, and use it as the free side unit. Fit the tip on the dog point of the set screw to the key groove on the shaft to guide the move of the shaft in axial direction.

Fig. 9.1 shows the structure example of bearing unit with key groove on shaft and full dog point set screw and use as free side unit. **Table 9.7** shows the dimensions of key groove for the full dog point set screw.

If a bearing unit is used as the free side bearing unit by adopting this method, h7 is recommended as the tolerance class of the shaft to be used.

If temperature of the shaft is higher than that in the bearing, the shaft in the tolerance class allowing a greater fitting clearance must be used.

If a bearing unit is used as the free side unit by adopting the above method, fretting corrosion may occur to the fitting surface between the bearing inner ring and the shaft. In order to prevent fretting corrosion, application of grease onto the bore surface of the bearing when the bearing unit is installed.

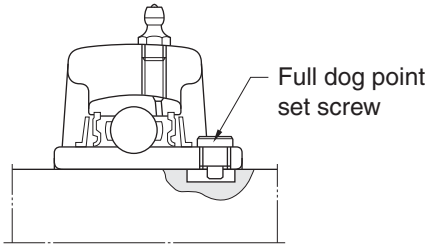

Fig. 9.1 Use on free side with full dog point set screw

Table 9.7 Dimensions of key groove for full dog point set screw (use on free side)

Nominal size of set screw	Dimensions of key groove (mm)		Applicable nominal bearing number		
	J	K (Min.)	UC200	UCX00	UC300
M6 × 0.75	5	4	201–206	X05	305, 306
M8 × 1	6	6	207–209	X06–X08	307
M10 × 1.25	6.5	7	210–212	X09–X11	308, 309
M12 × 1.5	7	9	213–218	X12–X17	310–314
M14 × 1.5	7	10		X18	315, 316
M16 × 1.5	8	12		X20	317–319
M18 × 1.5	8	13			320–324
M20 × 1.5	8	15			326, 328

Allowable tolerance of key groove dimension “K” (Recommended value : 0~+0.2)

(2) Use of cartridge type unit on free side

In the environment the rotational speed is relatively high or the bearing unit is exposed to vibration, use of the cartridge type unit as the free side unit and move of the bearing unit between the mounting bore on a machine and the outside surface of the housing in axial direction are recommended.

Fig. 9.2 shows the example of structure of the cartridge type unit as the free side unit.

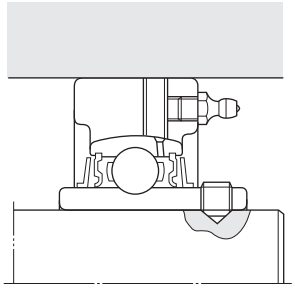

Fig. 9.2 Use of cartridge type unit on free side

If a ball bearing unit is exposed to heat, countermeasures against expansion of the shaft in axial direction as well as calculation of decrease in the internal clearance of the bearing to select the internal clearance of the bearing appropriately (see **"7 Operating temperature and bearing specifications"**).

9.2 Design of base

9.2.1 Rigidity of base and flatness of mounting surface

If rigidity of the base that a ball bearing unit is to be installed is low or the flatness of the mounting surface is poor, vibration or abnormal noise may occur to the bearing unit during operation, leading to premature breakage or lower strength of the housing.

Therefore, the base that the ball bearing unit is to be installed must have enough rigidity, and the mounting surface must be finished with accuracy allowing elimination of deformation on the bearing or housing.

Fig. 9.3 shows the recommended values for flatness of the mounting surface of the base that the ball bearing unit is to be installed.

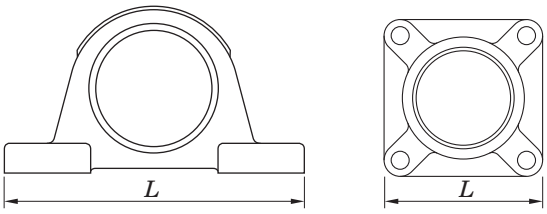

Max. : L / 1 000 mm

Fig. 9.3 Flatness of mounting surface of base (recommended)

9.2.2 Mounting bore of cartridge type unit

The cartridge type unit is directly fit to the cylindrical bore of the base.

Under the standard operating conditions, select H7 as the tolerance class of cylindrical hole on the base that the cartridge type unit is to be installed. For such purposes that the shaft and the bearing inner ring are hot, select G7 as the tolerance class of cylindrical bore on the base.

In the environment the bearing unit is exposed to vibration or impact, selection of the tolerance class allowing smaller fitting clearance between the cylindrical bore of the base and the bearing unit is recommended.

Table 9.8 shows the tolerance of cylindrical bore of the base that the cartridge type unit is to be installed.

Table 9.8 Tolerance of cylindrical bore for mounting cartridge type unit (recommended)

Unit : μm

Nominal bore dia. of cylindrical bore (mm)		Tolerance of cylindrical bore			
		H7		G7	
over	up to	upper	lower	upper	lower
50	**80**	+30	0	+40	+10
80	**120**	+35	0	+47	+12
120	**180**	+40	0	+54	+14
180	**250**	+46	0	+61	+15
250	**315**	+52	0	+69	+17
315	**400**	+57	0	+75	+18

9.2.3 Dimensions relative to installation of take-up type unit

The take-up type unit is incorporated between the two guide rails on the base side, and enables adjustment of the support position with the shaft center by the adjuster bolt.

Table 9.9 shows the dimensions of the guide rail, adjuster bolt, and round nut to install the take-up type unit to the base.

Table 9.9 Dimensions relative to installation of take-up type unit (recommended)

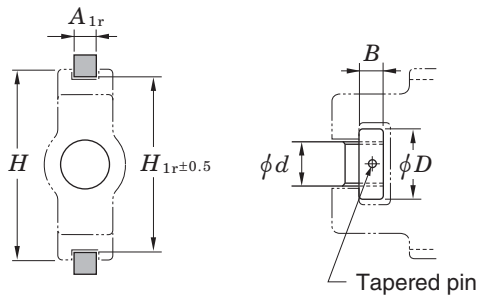

Unit : mm

Nominal housing No.	Dimensions of guide rail			Dimensions of adjuster bolt and round nut		
	A_{1r}	H_{1r}	H (Reference)	d	D	B
T204 T205	11	77	89	16	28	14
T206 T207	11	90	102	18	32	14
T208	15	103	114	24	42	16
T209 T210	15	103	117	24	42	16
T211 T212	20	131	146	30	55	20 27
T213 T214 T215	24	152	167	36	60	27
T216	24	166	184	36	60	27
T217	28	174	198	42	60	30
TX05 TX06	11	90	102	18	32	14
TX07	15	103	114	24	42	16
TX08 TX09	15	103	117	24	42	16
TX10 TX11	20	131	146	30	55	20 27
TX12 TX13 TX14	24	152	167	36	60	27
TX15	26	166	184	36	60	27
TX16 TX17	26	174	198	42	60	30

Unit : mm

Nominal housing No.	Dimensions of guide rail			Dimensions of adjuster bolt and round nut		
	A_{1r}	H_{1r}	H (Reference)	d	D	B
T305	11	81	89	22	32	12
T306 T307	15	91 101	100 111	24 26	36 40	14
T308 T309	16	113 126	124 138	28 30	45 50	16 18
T310	18	141	151	32	55	20
T311 T312	20	151 161	163 178	34 36	60 65	22 24
T313 T314 T315	24	171 181 193	190 202 216	38 40 40	65 80 80	26 28 28
T316	28	205	230	46	90	34
T317 T318	30	216 230	240 255	46 50	90 95	34 38
T319	32	242	270	50	95	38
T320 T321	32	262	290	52	100	40
T322	36	287	320	55	110	44
T324	42	322	355	60	120	50
T326 T328	47	352 382	385 415	65 70	130 140	55 60

9.3 Machining dimensions of holes for housing dowel pins

The pillow block type, square-flanged type, and rhombic-flanged type housing have the dowel pin seat. If accurate positioning of the housing is required, install it with the dowel pin.

As for the position of the pin for fixing the housing and pin diameter, see the **Appendix 5** at the end of this catalogue.

10 Unit number

Nominal number of Koyo Ball Bearing Unit conform to JIS B1557, and comprise the bearing unit type number (comprising bearing type code and housing type code), diameter series code, bore dia. number, supplementary code, and special code.

UC P 207 J L3

Nominal bearing number	UC207L3
Nominal housing number	P207J

UK P 209 J CD + H309X

Nominal bearing number	UK209+H309X
Nominal housing number	P209JE1
Nominal pressed steel cover number	(Through type) C-9x40 (Closed type) D-9

UC F 209 J L3 FD D1K2 G6 A1

Nominal bearing number	UC209L3D1K2G6
Nominal housing number	F209JA1E3
Nominal cast iron cover number	(Closed type) 209FD

- A1 — Housing special code (**Table 10.8**)
- D1K2 G6 — Bearing special code (**Table 10.7**)
- FD — Supplementaly code (**Table 10.6**)
- J — Fitting code (**Table 10.5**)
- 209 — Bore dia. No. (**Table 10.4**)
- 2 — Diameter series code (**Table 10.3**)
- F — Housing type code (**Table 10.2**)
- UC — Bearing type code (**Table 10.1**)

[Remark] The above number shows an example of nominal number structure. It may depend on the bearing unit type.

Table 10.1 Bearing type code

Bearing type code	Details
UC	Cylindrical bore, with set screws
UC-S6	Cylindrical bore, with set screws (stainless-series)
UK	Tapered bore (for adapter)
NA	Cylindrical bore, with eccentric locking collar
SB	Cylindrical bore, with set screws (light duty type)
SU	Cylindrical bore, with set screws (“compact” series)
SU-S6	Cylindrical bore, with set screws (stainless-series)
ER	Cylindrical bore, with set screws, cylindrical outer diameter, Lubricating mechanism
RB	Cylindrical bore, with set screws, cylindrical outer diameter

Table 10.2 Housing type code

Housing type code	Details
P	Pillow block type
P-SC	Cast steel pillow block type
IP	Thick section pillow block type
PA	Tapped-base pillow block type
PH	Higher centerheight pillow block type
LP	Light duty pillow block type
P	Pillow block type (“compact” series)
SP-H1	Pillow block type (stainless-series)
SPA-H1	Tapped-base pillow (stainless-series)

Table 10.2 Housing type code (continued)

Housing type code	Details
SP	Pillow block type (stainless-series)
PP	Cast steel pillow block type
F	Square-flanged type
FL	Rhombic-flanged type
FA	Adjustable rhombic-flanged type
FB	Three-bolt flange type
FC	Round-flanged type with spigot joint
FS	Square-flanged type
FL	Rhombic-flanged type (“compact” series)
SF-H1	Square-flanged type (stainless-series)
SFL-H1	Rhombic-flanged type (stainless-series)
SFL	Rhombic-flanged type (stainless-series)
PF	Pressed steel round-flanged type
PFL	Pressed steel rhombic-flanged type
T	Take-up type
ST-H1	Take-up type (stainless-series)
TH	Section steel frame take-up type
TL	Light channel steel frame take-up type
TU	Channel steel frame take-up type
PTH	Pressed steel frame take-up type
NPTH	Pressed steel frame take-up type
C	Cartridge type
HA	Hanger type

Table 10.3 Diameter series code

Diameter series code	Details
0	For light duty
2	For medium duty
X	For medium duty
3	For heavy duty

Table 10.4 Bore dia. number

Bore dia. No.	Details
8	Nominal bearing bore dia. 8 mm
00	Nominal bearing bore dia. 10 mm
01	Nominal bearing bore dia. 12 mm
02	Nominal bearing bore dia. 15 mm
03	Nominal bearing bore dia. 17 mm
04 or more	(Bore dia. No.) × 5 = Nominal bearing bore dia. (mm)
01–8	– (bore dia. No.) /16 = nominal bearing bore dia. (inch) (in this case, 8/16 = 1/2 inch = 12.7 mm)

Table 10.5 Fitting code

Fitting code	Details
J	Tolerance class of spherical bore of the housing is J7 (not shown on the bearing that the spherical bore diameter exceeds 120 mm)
H	Tolerance class of spherical bore of the housing is H7
K	Tolerance class of spherical bore of the housing is K7

Table 10.6 Supplementary code

Supplementary code	Details
C[1)]	Cover, open type
D[1)]	Cover, closed type
FC	Cast iron cover, open type
FD	Cast iron cover, closed type
L3	Triple-lip seal type

Note 1) Standard specifications of codes C and D are as shown below.
201–218, X05–X17 .....Pressed steel cover
X18–X20, 305–328 .....Cast iron cover

Table 10.7 Bearing special code

Item	Bearing special code	Details
Grease	None	Alvania No.2, Gold No.3, or equivalents
	D1	SH44M
	D2	SH33M
	D9	Demnum L-200
Set Screw	None	Double-point-contact
	G4	Pointed tip
	G6	With full dog point
	G7	With loose prevent nylon
Oil seal	None	Nitrile rubber
	K2	Silicone rubber
	K3	Non-contact type
Sealing Device	None	With oil seal and flinger (slinger) (UC, UK, NA, ER and RB types) With oil seal (SB, SA and SU types)
	P3	Without oil seal, flinger (slinger)
	P4	Without oil seal
Others	S5	For blower (oil seal : K3, inner clearance and bearing accuracy are specially controlled)
	S6	Stainless steel bearing

Table 10.8 Housing special code

Item	Housing special code	Details
Grease Nipple Thread Bore dia.	None	As shown in dimensional table
	A1	PT1/8 tube thread
	A2	PF1/8 tube thread
	A3	PT1/4 tube thread
	A4	PF1/4 tube thread
Grease Nipple Thread Bore Position	None	As shown in dimensional table
	B1	Right
	B2	Left
	B3	45°
	B5	30°
	B7	Both right and left
Machining	None	Standard type
	E1	Pressed steel
	E3	Cast iron cover mounting groove (diameter series 2, X, 3)
	E4	Non-lubricating type
Material	None	Gray iron casting (FC200) or cold-reduced carbon steel sheets and strips (SPCC) Compact type is made of zinc alloy die-cast (ZDC2) Small stainless series is made of stainless cast steel type (SCS13)
	H1	Stainless steel cast steel model (SCS13)
	H5	Rolled steel for general purpose (SS400)
	SC	Carbon steel cast steel model (SC450)
Grease Nipple	None	A type
	N1	B type (67.5°)
	N2	C type (90°)

11 Tolerances and internal clearance

Tolerances of a ball bearing unit is specified in JIS B 1558 (ball bearing for ball bearing unit) and JIS B 1559 (housing for ball bearing unit). JTEKT produces products conforming to these standards.

11.1 Tolerances of bearing

Table 11.1 to **Table 11.4** show the tolerance of a ball bearing for ball bearing unit.

Ball bearings for blower unit (special code S5) are produced with higher accuracy than standard types (see **Table 11.3**).

Table 11.5 shows the permissible values for chamfer dimensions of cylindrical bore bearing inner ring.

Table 11.2 Tolerances and permissible values of outer ring of ball bearing for ball bearing unit

Unit : μm

Nominal bearing outer dia. D (mm)		Mean outside diameter deviation Δ_{Dm}		Radial runout of assembled bearing outer ring K_{ea}
over	up to	upper	lower	max.
18	**30**	*0*	*– 9*	*15*
30	**50**	0	–11	20
50	**80**	0	–13	25
80	**120**	0	–15	35
120	**150**	0	–18	40
150	**180**	0	–25	45
180	**250**	0	–30	50
250	**315**	0	–35	60

[Remark] Values in Italics are prescribed in JTEKT standards.

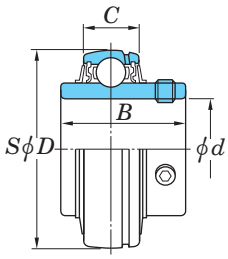

UC

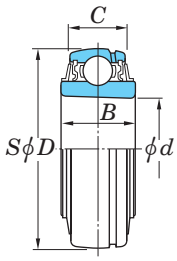

UK

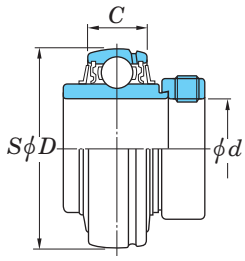

NA

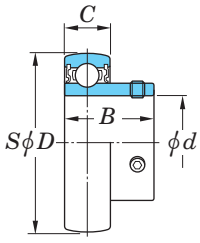

SB

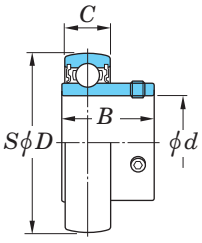

SU

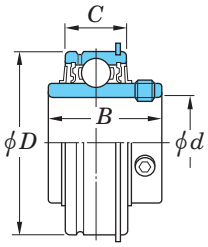

ER

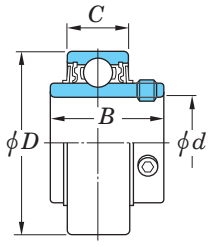

RB

Table 11.1 Tolerances and permissible values of inner rings of ball bearings for ball bearing units

Unit : μm

Nominal bearing bore dia. d (mm)		Single plane mean bore diameter deviation Δ_{dmp}		Single plane bore diameter variation V_{dsp}	eccentricity deviation of eccentric surface of inner ring and eccentric locking collar Δ_{Hs}		Single inner (outer) ring width deviation Δ_{Bs} (Δ_{Cs})		Radial runout of assembled bearing inner ring K_{ia}
over	up to	upper	lower	max.	upper	lower	upper	lower	max.
–	**10**	*+15*	*0*	*10*	*+100*	*–100*	*0*	*–120*	*10*
10	**18**	+15	0	10	+100	–100	0	–120	15
18	**31.75**	+18	0	12	+100	–100	0	–120	18
31.75	**50.8**	+21	0	14	+100	–100	0	–120	20
50.8	**80**	+24	0	16	+100	–100	0	–150	25
80	**120**	+28	0	19	+100	–100	0	–200	30
120	**180**	+33	0	22	+100	–100	0	–250	35

[Remark] Values in Italics are prescribed in JTEKT standards.

Table 11.3 Tolerances and permissible values of inner ring of ball bearing for blower unit (S5)

Unit : μm

Nominal bearing bore dia. d (mm)		Single plane mean bore diameter deviation Δ_{dmp}		Single plane bore diameter variation V_{dsp}	Radial runout of assembled bearing inner ring K_{ia}
over	up to	upper	lower	max.	max.
10[1)]	**18**	+13	0	6	7
18	**31.75**	+13	0	6	8
31.75	**50.8**	+13	0	10	10
50.8	**80**	+15	0	10	10
80	**120**	+18	0	14	13
120	**180**	+23	0	14	18

Note 1) 10 mm should be included in this category.

Table 11.4 Tolerances and permissible values for tapered bore of bearing

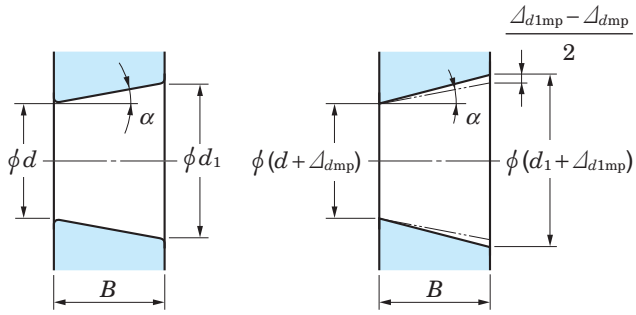

Theoretical tapered bore

Tapered bore with single plane mean bore diameter deviation

Unit : μm

Nominal bearing bore dia. d, mm		Δ_{dmp}		$\Delta_{d1mp}-\Delta_{dmp}$		V_{dsp}[1)]
over	up to	upper	lower	upper	lower	max.
18	**30**	+33	0	+21	0	13
30	**50**	+39	0	+25	0	16
50	**80**	+46	0	+30	0	19
80	**120**	+54	0	+35	0	22
120	**180**	+63	0	+40	0	40

Note 1) To be applied to all the radial planes of tapered bore

[Remarks] 1. Applicable range
Applicable to tapered bore of inner ring of tapered bore radial bearing that standard value of taper ratio is 1/12

2. Amount code

d_1 : Standard diameter at theoretical large end of tapered bore $d_1 = d + \frac{1}{12}B$

Δ_{dmp} : Single plane mean bore diameter deviation at theoretical small end of tapered bore

Δ_{d1mp} : Single plane mean bore diameter deviation at theoretical large end of tapered bore

V_{dsp} : Single plane bore diameter variation (a tolerance for the diameter variation given by a maximum value applying in any radial plane of the bore)

B : Nominal inner ring width

α : 1/2 of nominal tapered angle of tapered bore

α = 2° 23' 9.4"
= 2.385 94°
= 0.041 643 rad

Table 11.5 Permissible values for chamfer dimensions of inner ring of bearing with cylindrical bore

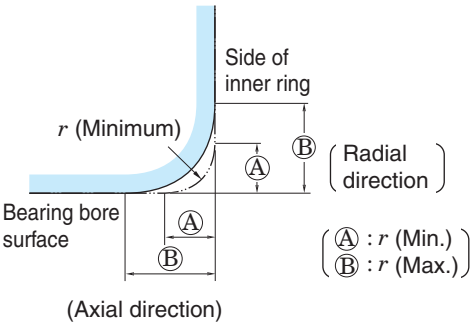

Unit : mm

r (Min.)	r (Max.)	
	Radial direction	Axial direction
0.6	1	2
1	1.5	3
1.1	2	3.5
1.5	2.3	4
2	3	4.5
2.1	4	6.5
2.5	3.8	6
3	5	8
4	6.5	9

[Remark] There shall be no specification for the accuracy of the shape of the chamfer surface, but its outline in the axial plane shall not be situated outside of the imaginary circle arc with a radius of $r_{\min}$ or $r_{1\min}$ which contacts the inner ring side face and bore, or the outer ring side face and outside surface.

11.2 Tolerances of housing

As the tolerance of the housing for a ball bearing unit, tolerance of the diameter of spherical bearing seat fit to the bearing, and tolerance and permissible value of dimensions relative to installation of the housing are specified.

Table 11.6 shows the tolerance of diameter of the spherical bearing seat of housing. Usually, select tolerance class J7 that allows transition fitting of the housing and the bearing.

If priority should be given to operability in installation to a machine, select tolerance class H7 allowing clearance fitting. The unit conforming JIS of tolerance class H7 is equipped with the detent to the outer ring to prevent turning of the outer ring.

If rotating outer ring load occurs or the bearing is rotated while the shaft is stopped, select the tolerance K7 allowing interference fit.

Fig. 11.1 shows the representative example of dimensions relative to installation of the housing with tolerance and permissible value. Respective dimensional tables show the tolerance and permissible values of dimensions relative to installation of the housing.

Table 11.6 Tolerances of spherical bearing seat diameter of housing

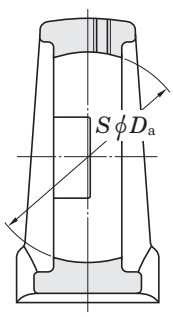

Unit : μm

Nominal dia. of spherical bearing seat D_a (mm)		Tolerance class H7		Tolerance class J7		Tolerance class K7	
		Deviation of spherical bearing seat dia. Δ_{Dam}		Deviation of spherical bearing seat dia. Δ_{Dam}		Deviation of spherical bearing seat dia. Δ_{Dam}	
over	up to	upper	lower	upper	lower	upper	lower
18	**30**	+21	0	+12	− 9	+ 6	−15
30	**50**	+25	0	+14	−11	+ 7	−18
50	**80**	+30	0	+18	−12	+ 9	−21
80	**120**	+35	0	+22	−13	+10	−25
120	**180**	+40	0	+26	−14	+12	−28
180	**250**	+46	0	+30	−16	+13	−33
250	**315**	+52	0	+36	−16	+16	−36

[Remark] JTEKT generally applies class J to housing designs.
Class H and class K can also be applied depeding on the application.

Fig. 11.1 Dimensions relative to installation of housing with tolerance and permissible value (representative example)

Pillow block type housing

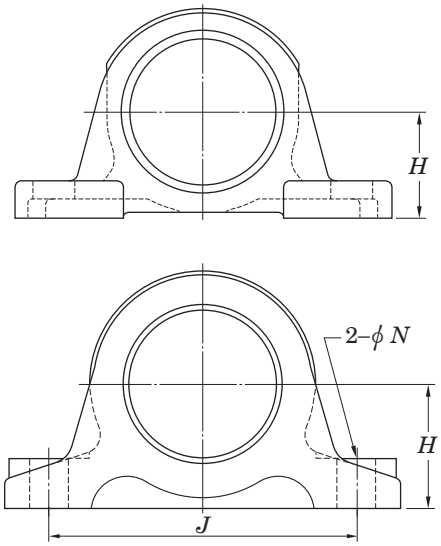

Take-up type housing

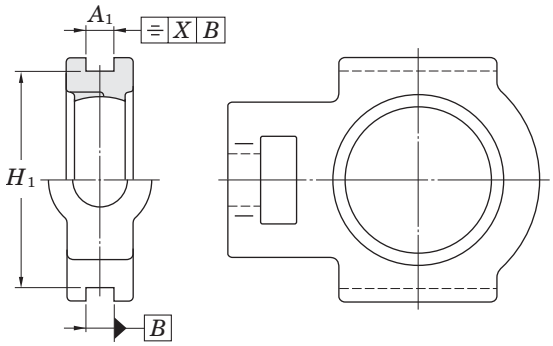

Frame for take-up type unit

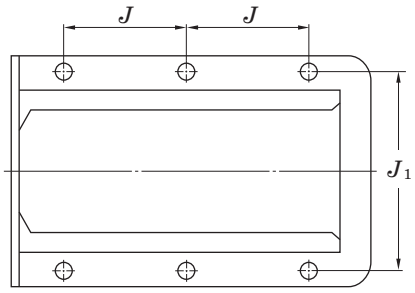

Flange type housing

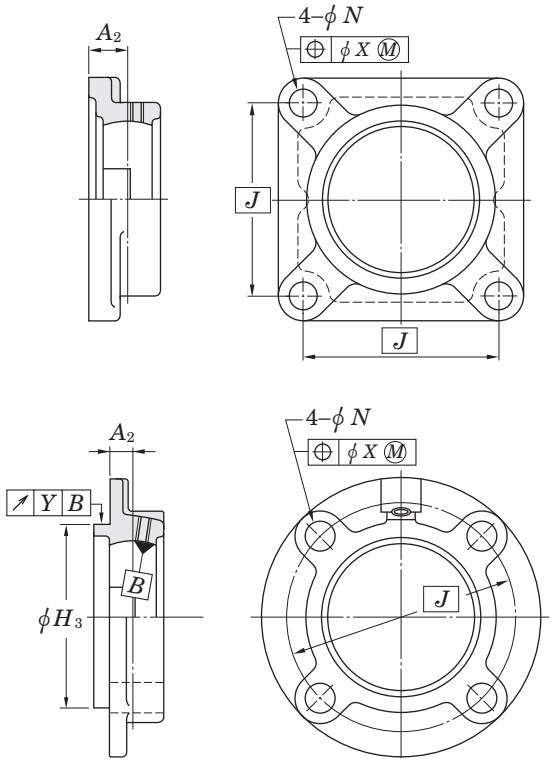

Cartridge type housing

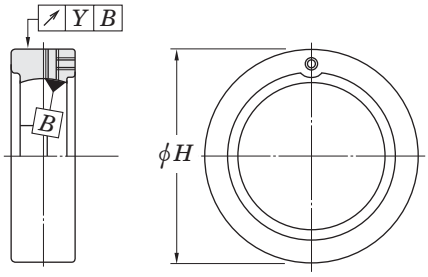

[Remark] Respective tolerances and permissible values for housing are shown in dimensional tables.

Table 11.7 shows standard tolerance of cut or cast portions not specified in this catalogue.

Table 11.7 Standard tolerance not specified respectively

Item	Standard No.	Class
Cutting	JIS B 0405	Medium
Casting of cast iron	JIS B 0403	Standard
Casting of cast steel	JIS B 0403	Standard

11.3 Bearing internal clearance

Ball bearing internal clearance for ball bearing unit is specified by the move at the time the inner ring or outer ring is moved in the radial direction (radial internal clearance). Value of internal clearance during operation (to be called operation clearance) gives a great influence on rolling fatigue life of the bearing, heat, noise, and vibration.

If the bearing inner ring is installed to the shaft with interference, the internal clearance of bearing must be fixed taking expansion of the bearing inner ring into consideration. If transmission heat to the shaft is high or hot steam runs through the hollow of the shaft, calculate the decrease of internal clearance, and appropriately select the internal clearance of bearing (see **"7 Operating temperature and bearing specifications"**).

Table 11.8 shows the internal clearance applicable to specifications of ball bearing for Koyo Ball Bearing Unit, and **Table 11.9** shows the standard values of bearing internal clearance.

Table 11.8 Internal clearance applicable to types of ball bearing for ball bearing unit

Type	Applicable internal clearance	
	Bearing with cylindrical bore	Bearing with tapered bore
Standard type	CN	C3
Stainless steel type	C3	–
Heat resistant type (special code : D1K2)	C4	C5
Cold resistant type (special code : D2K2)	CN	C3
High speed type (special code : K3)	CN	C3
For blower (special code : S5)	C2	C3

[Remark] For the bearings that the internal clearance in this table is applied, no clearance code is indicated.

Table 11.9 Standard values for internal clearance of ball bearing for ball bearing unit

Unit : μm

Nominal bearing bore dia. d (mm)		Internal clearance											
		C2		CN		GN		C3		C4		C5	
over	up to	lower	upper	lower	upper	lower	upper	lower	upper	lower	upper	lower	upper
6	**10**	0	7	2	13	–	–	8	23	14	29	20	37
10	**18**	0	9	3	18	10	25	11	25	18	33	25	45
18	**24**	0	10	5	20	12	28	13	28	20	36	28	48
24	**30**	1	11	5	20	12	28	13	28	23	41	30	53
30	**40**	1	11	6	20	13	33	15	33	28	46	40	64
40	**50**	1	11	6	23	14	36	18	36	30	51	45	73
50	**65**	1	15	8	28	18	43	23	43	38	61	55	90
65	**80**	1	15	10	30	20	51	25	51	46	71	65	105
80	**100**	1	18	12	36	24	58	30	58	53	84	75	120
100	**120**	2	20	15	41	28	66	36	66	61	97	90	140
120	**140**	2	23	18	48	33	81	41	81	71	114	105	160

[Remarks] 1. Radial internal clearance in this table conforms to JIS B 1558 (ball bearing for ball bearing unit).
2. Increase in radial internal clearance generated by measured load conforms to the table below. Smaller correction of C2 clearance is applicable to the lower clearance, while larger correction is applicable to the upper clearance.

Unit : μm

Nominal bearing bore dia. d (mm)		Measured load	Correction of clearance				
over	up to	N	C2	CN	GN, C3	C4	C5
2.5	**18**	24.5	3 – 4	4	4		
18	**50**	49	4 – 5	5	6		
50	**280**	147	6 – 8	8	9		

12 Materials

12.1 Materials of bearing

Ball bearings for ball bearing unit are made of the following materials : bearing rings (outer and inner rings) and rolling elements (balls) are made of steel, and cages are made of pressed steel.

These bearing materials need the features shown below.

(1) Higher elastic limit is required, since high contact stress occurs partially.
(2) Higher rolling fatigue strength is required, since great contact load occurs repeatedly.
(3) Superior hardness
(4) Superior wear resistance
(5) Superior toughness against impact load
(6) Superior stability of dimensions

As the material of bearing rings (outer and inner rings) and rolling elements (balls) of the ball bearing for Koyo Ball Bearing Unit, high carbon chromium bearing steel specified in JIS is used.

For more reliability of bearing, vacuum degassing is executed against high carbon chromium bearing steel to reduce non-metallic inclusion and included oxygen. After the materials of bearing are made into the specified form, quench-and-temper is executed until its hardness is 60HRC.

Table 12.1 shows the chemical components of high carbon chromium bearing steel. As the material of bearing rings and rolling elements of the ball bearings for stainless-series unit (special code : S6), stainless steel with superior corrosion resistance is used. Cages are made of cold-reduced carbon steel sheets and strips specified in JIS.

Table 12.2 shows the chemical compositions of cold-reduced carbon steel sheets and strips specified in JIS.

12.2 Materials of housing

A housing for ball bearing unit is mainly made of gray iron casting products, carbon steel casting products, structural steel, cold-reduced carbon steel sheets and strips.

Gray iron casting is the most popular as the material of housing for ball bearing unit, featuring absorption of vibration, damping superior to other materials, easy and varied forming by casting, appropriate strength, and excellent heat property.

Table 12.3 shows the mechanical properties of gray iron casting.

If superior strength is required for the housing for ball bearing unit, select carbon steel casting products with higher rupture strength, carbon steel casting, or general structural rolled steel with higher strength against impact.

For the material of housings of the “compact” series unit, zinc alloy die-cast is used, and corrosion-resistant cast steel products are used for housings of the stainless series unit. Cold-reduced carbon steel sheets and strips are used as the material of housings for the pressed steel unit.

Table 12.4 to **12.8** show the mechanical properties of these housing materials.

Spheroidal graphite iron casting (FCD450-10 of JIS G 5502) may be used, as well as these materials.

Table 12.1 Chemical compositions of high carbon chromium bearing steel (JIS G 4805)

Code	Chemical components (%)						
	C	Si	Mn	P	S	Cr	Mo
SUJ 2	0.95–1.10	0.15–0.35	0.50 or less	0.025 or less	0.025 or less	1.30–1.60	0.08 or less

Table 12.2 Chemical compositions of cold-reduced carbon steel sheets and strips (SPCC) (JIS G 3141)

Code	Chemical components (%)						
	C	Si	Mn	P	S	Ni	Cr
SPCC	0.12 or less	–	0.50 or less	0.040 or less	0.045 or less	–	–

Table 12.3 Mechanical properties of gray iron casting (FC200) (JIS G 5501)

Type code	Tensile strength N/mm^2	Hardness HB
FC200	200 or more	223 or less

Table 12.4 Mechanical properties of carbon steel casting (SC450) (JIS G 5101)

Type code	Yielding point or bearing force N/mm^2	Tensile strength N/mm^2	Extension %	Construction %
SC450	225 or more	450 or more	19 or more	30 or more

Table 12.5 Mechanical properties of general structural rolled steel (SS400) (JIS G 3101)

Type code	Yielding point or bearing force N/mm²			Tensile strength MPa	Thickness of steel mm	Tensile test piece	Elonga-tion %	Bendability		
	Thickness of steel mm							Bending angle	Inside dia.	Test piece
	incl. 16	Over 16 incl. 40	Over 40							
SS400	245 or more	235 or more	215 or more	400–510	Over 5, 16 max.	No.1A	17 or more	180°	1.5 times of thickness	No.1
					Over 16, 40 max.	No.1A	21 or more			
					Over 40	No.4	23 or more			

Table 12.6 Mechanical properties of zinc alloy die-cast (ZDC02) (JIS H 5301) (Reference)

Code	Tensile strength MPa	Elonga-tion %	Impact MJ/m²	Hard-ness HB
ZDC2	285	10	1.4	82

Table 12.7 Mechanical properties of corrosion-resistant cast steel (SCS13) (JIS G 5121)

Type code	Bearing force MPa	Tensile strength MPa	Elonga-tion %	Hard-ness HB
SCS13	185 or more	440 or more	30 or more	183 or more

Table 12.8 Mechanical properties of cold-reduced carbon steel sheets and strips (SPCC) (JIS G 3141)

Type code	Tensile strength MPa	Elongation %
SPCC	270 or more	34 or more

12.3 Materials of parts and accessories

Table 12.9 shows materials of parts and accessories of a ball bearing unit.

Table 12.9 Materials of parts and accessories of ball bearing units

Designations	Materials	Code	Standard code
Oil seal (standard type)	Nitrile rubber	NBR	–
Oil seal (heat resistant, cold resistant)	Silicone rubber	VMQ	–
Flinger (slinger)	Cold-reduced carbon steel sheets and strips	SPCC	JIS G 3141
Stainless steel Flinger (slinger)	Cold rolled stain-less steel plate and steel strip	SUS304-CP, SUS304-CS	JIS G 4305
Pressed steel cover	Cold-reduced carbon steel sheets and strips	SPCD	JIS G 3141
Pressed stainless steel cover	Cold rolled stain-less steel plate and steel strip	SUS304-CP, SUS304-CS	JIS G 4305
Cast iron cover	Gray casting iron products	FC200	JIS G 5501
Hexagon socket set screw	Chrome molybde-num steel	SCM435	JIS G 4053
Stainless steel hexagon socket set screw	Stainless bar steel	SUS410	JIS G 4303
Adapter sleeve for bearing	Mechanical struc-tural carbon steel	S25C	JIS G 4051
Lock nut for bearing	Mechanical struc-tural carbon steel	S25C	JIS G 4051
Washer for bearing	Cold-reduced carbon steel sheets and strips	SPCC	JIS G 3141
Eccentric locking collar	Mechanical struc-tural carbon steel	S20C	JIS G 4051
Grease nipple	Copper and copper alloy rod	C3604 SUM24L	JIS H 3250 JIS G 4804

13 Performance

13.1 Friction torque of bearing

Friction torque of a ball bearing for ball bearing unit is the synthesis of rolling friction between the rolling elements (balls) and the bearing rings (outer and inner rings), sliding friction between the rolling elements and the cages, agitating resistance of lubricants, and friction resistance of oil seal.

Greatness of friction torque is influenced by the type, dimensions, load, and rotational speed of bearing, and lubricating conditions.

For the ball bearing unit, oil seals with especially superior dustproof performance are adopted to improve sealing performance of the bearing. Thus, friction resistance of the oil seal greatly depends on the friction torque of the bearing.

Friction torque of the ball bearing for ball bearing unit can be found by the Formulas below.

$$M = M_p + M_k \quad \cdots\cdots (13.1)$$

$$M_p = \mu \cdot P \cdot \frac{d}{2} \quad \cdots\cdots (13.2)$$

Whereas,

M	: Friction torque of bearing	mN · m
M_p	: Friction torque of sections changed by load	mN · m
M_k	: Friction torque of sections changed by rotational speed	mN · m
μ	: Friction coefficient (0.001 5 to 0.002)	
P	: Load applied to bearing	N
d	: Nominal bearing bore dia.	mm

Note that the agitating resistance of lubricants and the friction resistance of oil seal are difficult to be calculated, since they are fluctuated by rotational speed.

Fig. 13.1 shows the result of measurement of friction torque of the typical ball bearing unit.

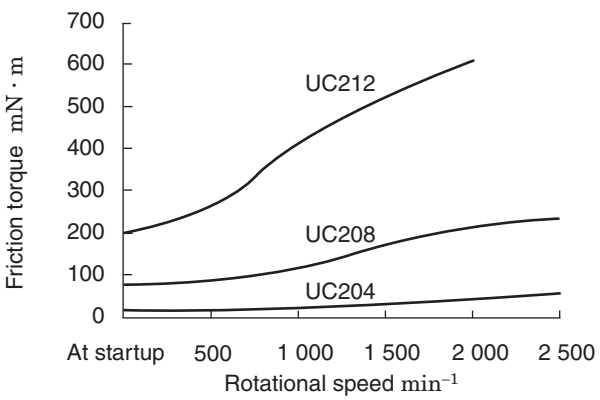

Fig. 13.1 Example of measurement result of ball bearing unit

13.2 Increase in temperature of bearing

Increase in temperature of the ball bearing for ball bearing unit is indicated as heat energy converted from the friction torque in the bearing during operation. Temperature of the bearing during operation increases in proportion to the greatness of friction torque and rotational speed (friction torque increases in proportion to the greatness of load).

Increase in temperature of the ball bearing for ball bearing unit depends on the heating value generated by friction in the bearing and that discharged outside from the surface of the bearing and housing. Therefore, increase in temperature of the ball bearing for ball bearing unit is influenced by the environmental conditions of the location that the ball bearing unit is installed (quality of heat radiation environment).

Temperature of the ball bearing unit is increased gradually after the startup of operation, and reaches the maximum level after one or two hours, if no abnormality occurs. Then, it is decreased a little, and enters the steady-state (see **Fig. 13.2**).

In this manner, if the operating conditions are not changed, bearing temperature is virtually constant, and therefore, measurement of temperature and assumption of the status of bearing are enabled.

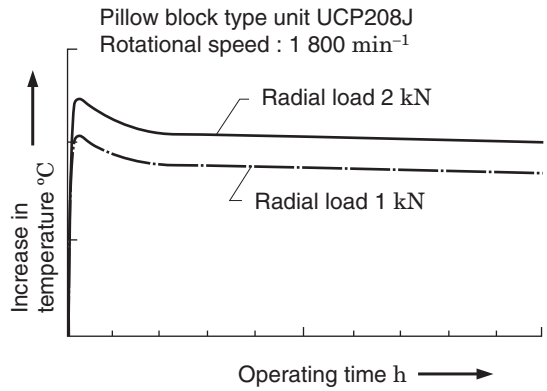

Fig. 13.2 Example of temperature measurement during operation of pillow block type unit

Increase in temperature during operation of the ball bearing unit depends on the type of oil seal used for the bearing as well as friction torque.

Increase in temperature of the triple-lip seal type (supplementary code L3) is greater than the standard type, and that of the non-contact seal type (special code K3, S5) is smaller than the standard type.

The bearing units for high speed and blower are equipped with the non-contact type oil seals for high speed use and reduction of heat, vibration, and noise.

13.3 Dustproof and waterproof performance

JTEKT executes various tests to check dustproof and waterproof performance of the ball bearing unit. Representative test results are shown below.

13.3.1 Dust sprinkle rotating test (dust preventive performance)

Use the drum type dust sprinkle rotating test machine for this test. Directly sprinkle dusts onto the ball bearing unit while it is being operated, and then, judge the dust preventive performance of the product.

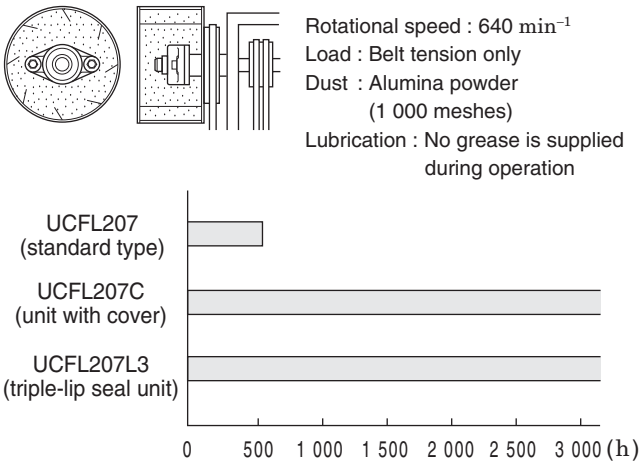

Fig. 13.3 Example of result of dust sprinkle rotating test (dust preventive performance)

In the case of the standard type, abnormal noise occurred about 500 hours after operation was started, and ingress of dusts was recognized.

On the other hand, no abnormality was found in the triple-lip seal type (supplementary code L3) and the covered type (supplementary code C) even after about 3 000 hours after operation was started, and superior dust proof performance was recognized.

13.3.2 Dust bury rotating test (dust preventive performance)

Bury the ball bearing unit into dusts, and run it with the impeller installed to the shaft while stirring dusts, and judge the dust preventive performance of the product. This test is executed under the severest conditions among the operating conditions of the ball bearing unit.

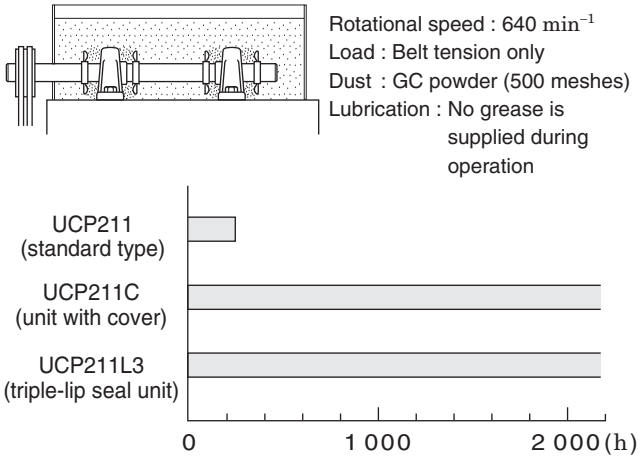

Fig. 13.4 Example of result of dust bury rotating test (dust preventive performance)

In the case of the standard type, abnormal noise occurred about 200 hours after operation was started, and ingress of dusts was recognized.

On the other hand, no abnormality was found in the triple-lip seal type (supplementary code L3) and the covered type (supplementary code C) even after about 2 000 hours after operation was started, and superior dust preventive performance was recognized.

13.3.3 Waterproof performance test

In this test, water is splashed directly impellers installed on the shaft.

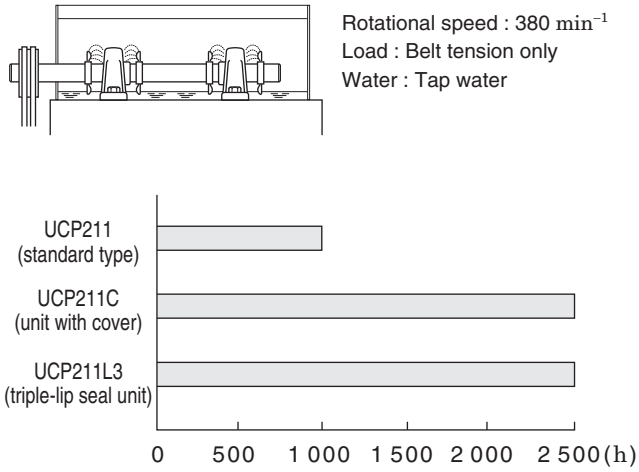

Fig. 13.5 Example result of waterproof performance test

In the case of the standard type, rust was found on the balls and raceway surface (outer and inner rings) about 1 000 hours after operation was started.

On the other hand, rust of equal level to the standard type was found in the triple-lip seal type (supplementary code L3) and the covered type (supplementary code C) after about 2 500 hours after operation was started.

14 Handling

The most significant feature of the ball bearing unit is simplicity of handling and installation. However, if handling or installation is wrong, premature breakage may occur to the ball bearing unit.

Therefore, handle and install it appropriately for genuine performance of the ball bearing unit.

14.1 Installation

14.1.1 Installation of unit with set screws

When installing the unit to the shaft with the set screws, it is enough to tighten the two set screws of the bearing inner ring with the specified torque.

However, if the environment is exposed to impact or vibration, the shaft is rotated in normal and reverse directions, or the machine is started and stopped frequently and repeatedly, grind the surface of the shaft where the set screw contacts with a file so that the flat seat (**Fig. 14.1**) or drilled seat (**Fig. 14.2**) is provided. It improves the tightening effect of the set screw substantially.

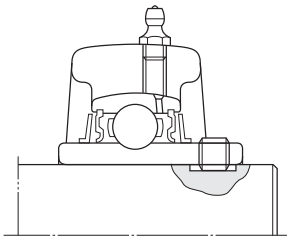

Fig. 14.1 Flat seat provided for shaft
(for improvement in set screw tightening effect)

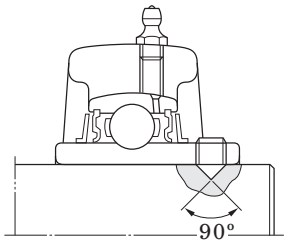

Fig. 14.2 Drilled seat provided for shaft
(for improvement in set screw tightening effect)

If the environment is exposed to a great axial load or excessive vibration, use the shouldered shaft, and tighten the bearing inner ring with the nut (**Fig. 14.3**).

As for the dimensions of the shouldered shaft, see **"9 Design of shaft and base"**.

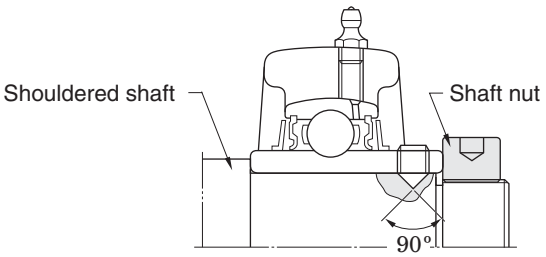

Fig. 14.3 Example of installation with using shouldered shaft and nut

The standard Koyo Ball Bearing Unit is equipped with the double point set screw featuring secure tightening to shaft. Other set screws are also available depending on your purposes and operating conditions (see **Table 14.1**).

Table 14.1 Set screw of ball bearing for unit

Designations (code)	Details
Double point (no indication)  Double point (**G7**) Locking finish	The cone portion at the center of the screw combined with the round point at the outer edge provide excellent shaft contact and greatly reduce fitting error. A nylon film is fused to the thread surface to prevent the screw from loosening during operation.
	Prevent looseness with elastic force of nylon film fused to the thread surface.
Pointed (**G4**) 	The cone point set screw has a 90º angle and fits a drilled cone seat in the shaft. It allows correct positioning on the shaft and prevents shaft movement in an axial direction.
Full dog point cap (**G6**) 	The full dog point set screw fits into the key groove in the shaft and allows for expansion and contraction of the shaft.

Procedures for installation of the ball bearing unit with set screw are shown below.

(1) Inspect the unit to ensure that the rigidity of the base, flatness of the mounting surface, variation of tolerance of the shaft meet the standards. Check for bend, flaw, or birr on the shaft.

(2) Make sure that the tip of the set screw does not exceed the bearing bore diameter surface.

(3) Fit the bearing unit to the shaft, and place it to the specified position. To fit it to the shaft with tight fitting, press-fit the bearing unit to the shaft with a press, cold-fit by cooling the shaft, or shrink-fit the bearing unit by warming it with air bath (100 ºC or less).

Avoid hitting the side of the bearing inner ring with a hammer to press-fit the bearing to the shaft.

(4) Place the bearing unit to the specified position on the base, and fix it with bolts (**Fig. 14.4**).

Tighten the mounting bolt of the housing with the specified torque by a torque wrench. As for the tightening torque of the mounting bolt, see the **Appendix table 2** at the end of this catalogue.

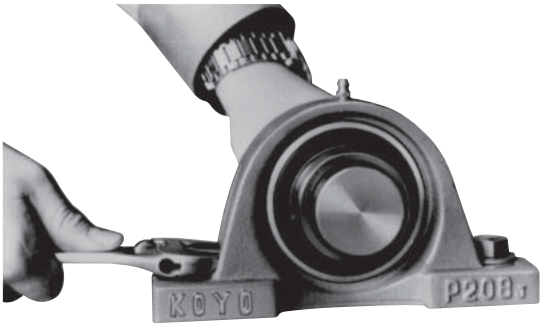

Fig. 14.4 Fixing ball bearing unit to base

(5) Tighten the set screws (two) of a bearing inner ring with the specified tightening torque evenly (**Fig. 14.5**).
As for the tightening torque of the set screw, see the **Appendix table 3** at the end of this catalogue.

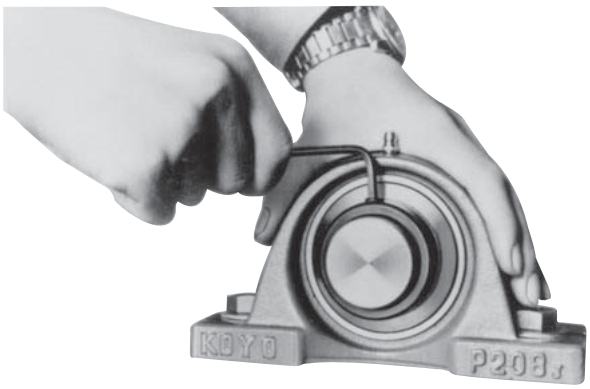

Fig. 14.5 Tightening of set screw

(6) Turn the shaft with your hands, and tighten the set screws (two) of another bearing inner ring with the specified torque.
(7) At last, turn the shaft with your hands, and check for abnormality in turning status of the bearing.

14.1.2 Installation of unit with adapter

To install the bearing with tapered bore to the shaft, set the adapter assembly (sleeve, locknut and washer) between the bearing bore diameter and the shaft. The bearing can be securely fixed even in the environment exposed to excessive vibration or impact.

If tightening of the locknut is loose, fitting to the shaft may be loosened during operation, and slippage occurs to the fitting surface, leading to wear on the shaft or parts. On the contrary, if tightening of the locknut is excessive, the bearing inner ring is expanded, and internal clearance of the bearing is too small, causing abnormal heat or premature breakage. Therefore, pay close attention to installation of the bearing with adapter.

Procedures for installation of the ball bearing unit with adapter assembly are shown below.

(1) Inspect the unit to ensure that the rigidity of the base, flatness of the installing surface, and variation of tolerance of the shaft meet the standards. Check for bend, flaw, or birr on the shaft.
(2) Fit the adapter sleeve to the shaft, and move the adapter sleeve to the installing position of the bearing unit.
If the fitting is too tight to insert the adapter sleeve, put a screwdriver into the cutout of the adapter sleeve, and expand the cutout for easier fitting.
(3) Fit the bearing unit to the shaft.
Then, place the cylindrical backing plate to the whole side of the bearing inner ring that the locknut is to be attached, and tap all around the large diameter side end face to fit the bore diameter surface of the bearing inner ring to the tapered surface of the adapter sleeve closely (**Fig. 14.6**).

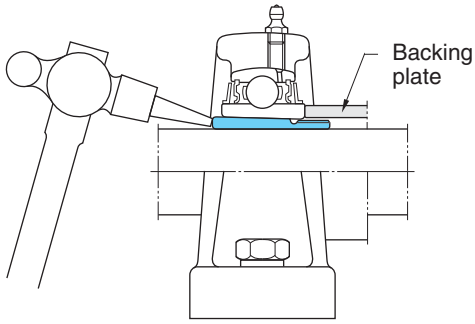

Fig. 14.6 Fitting adapter sleeve to bearing with tapered bore

(4) Fit the washer and locknut to the adapter sleeve, and tighten the locknut with your hands.
(5) Place the bearing unit to the specified position of the base, and fix it with the bolts.
Tighten the mounting bolt of the housing with the specified torque by a torque wrench.
As for the tightening torque of the set screw, see the **Appendix table 2** at the end of this catalogue.
(6) Tighten the locknut of the adapter.
When tightening the locknut, tighten it with a wrench for tightening, or place a jig onto the cutout of the locknut outer surface, and tap the jig with a hammer and turn the locknut by 1/4 to 1/3 turn (**Fig. 14.7**).
As for the tightening torque of the locknut, see the **Appendix table 4** at the end of this catalogue.

Fig. 14.7 Tightening locknut

(7A) For the pillow block type unit, loosen the mounting bolts on a housing, adjust the position of the bearing unit in the axial direction while turning the shaft by your hands, and then, tighten the mounting bolt on the housing with the specified torque again.
(7B) For the flange type unit, positions of the bearing and housing in the axial direction must be fit completely. Therefore, pay close attention and tighten the locknut to prevent any error of the position of bearing inner ring.
(8) Bend the outer tab on a washer that fits to the position of cutout on the outer surface of the locknut, and lock the locknut (**Fig. 14.8**).

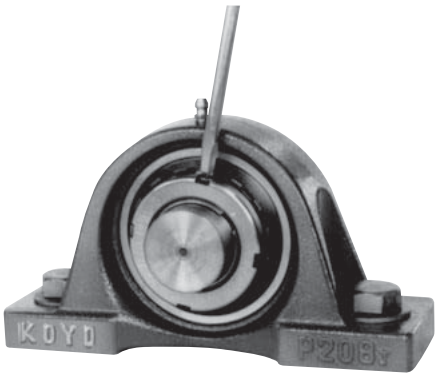

Fig. 14.8 Bending outer tab of washer
(Locking locknut)

(9) At last, turn the shaft with your hands, and check for abnormality in the rotating status of the bearing.

14.1.3 Installing unit with eccentric locking collar

When installing the bearing to the shaft with the eccentric ring, fit the eccentric section of the end outside surface of the bearing inner ring to the eccentric recessed section provided on the eccentric locking collar, turn the eccentric locking collar, and tighten the set screw of the eccentric locking collar to fix the bearing to the shaft.

Since the rotating force of the shaft increases the tightening force of the eccentric ring to the shaft, the unit with eccentric locking collar allows secure fixing of the bearing (**Fig. 14.9**).

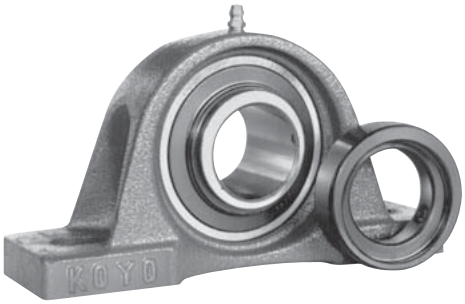

Fig. 14.9 Ball bearing unit with eccentric locking collar

Procedures for installation of the ball bearing unit with eccentric locking collar are shown below.
(1) Inspect the unit to ensure that the rigidity of the base, flatness of the mounting surface, and variation of tolerance of the shaft meet the standards. Check for bend, flaw, or birr on the shaft.
(2) Fit the bearing unit to the shaft, and place it on the specified position.
(3) Install the bearing unit to the specified position of the base, and fix it with the bolts.
Tighten the mounting bolts for the housing with the specified torque with a torque wrench.
For the tightening torque of the mounting bolt, see the **Appendix table 2** at the end of this catalogue.
(4) Fit the eccentric section of the bearing inner ring to the eccentric recessed section provided on the eccentric locking collar, turn the eccentric locking collar in the shaft turning direction, and tighten the set screw of the eccentric locking collar with the specified torque (**Fig. 14.10**).
For the tightening torque of the set screw, see the **Appendix table 3** at the end of this catalogue.

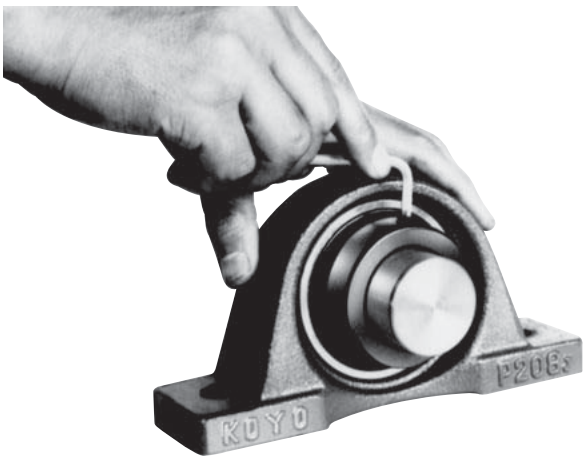

Fig. 14.10 Installing eccentric locking collar

(5) Turn the shaft with your hands. Then, fix the eccentric locking collar of another bearing unit to the bearing inner ring, and tighten the set screw of the eccentric locking collar with the specified torque.
(6) At last, turn the shaft with your hands, and check for abnormality in the rotating status of the bearing.

14.1.4 Installing unit with cover

Covers for ball bearing unit are available in two types, pressed steel and cast iron. Install both the covers at last after installation of the bearing and housing is complete.

Procedures for installation of the ball bearing unit with cover are shown below.
(1) Apply grease all around the seal lip of the cover, and pack the internal space of the cover with grease (approximately 1/3 to 1/2 of the space capacity) (**Fig. 14.11**).

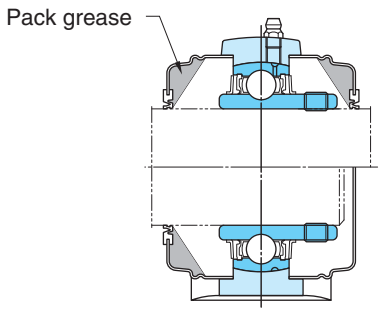

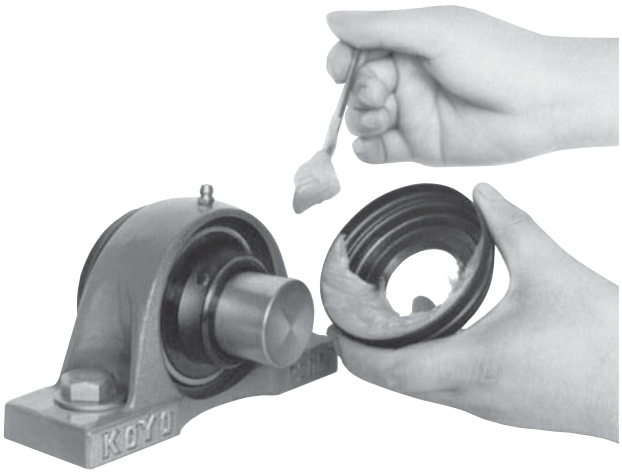

Fig. 14.11 Packing grease in internal space and seal lip of cover

(2) Put a cover through the shaft, and then, fit the bearing unit to the shaft.
(3) Fit the cover through the shaft to the cover groove on the housing, and fix it.
(4A) For the pressed steel cover, tap all around the cover evenly with a synthetic resin hammer to prevent deformation, and install it to the housing (**Fig. 14.12**).
To remove the pressed steel cover, put a screwdriver into the groove on the periphery of the cover, and slightly pry it.

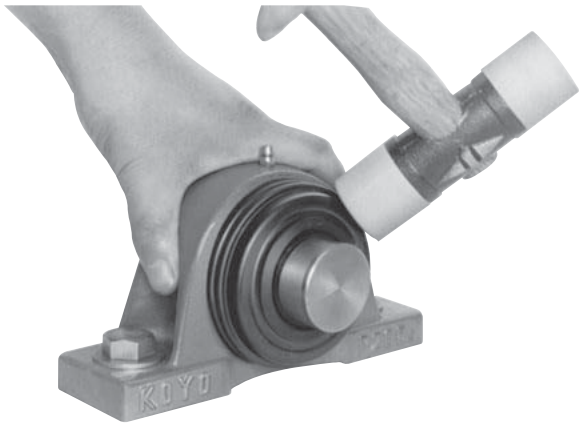

Fig. 14.12 Installing steel plate cover

(4B) When installing the cast iron cover, fit the cover to the cover groove of the housing, and fix it with the bolt.
For the tightening torque of the cast iron cover mounting bolt, see the **Appendix table 2** at the end of this catalogue.
(5) Install another cover to the housing in a similar manner.
(6) Check for abnormality of the installed cover.
(7) At last, turn the shaft with your hands, and check for abnormality in the rotating status of the bearing.

14.2 Test run inspection

After installation of the ball bearing unit is complete, execute the test run inspection to ensure that it is done appropriately.
The test run inspection should be executed by following the procedures below. Check for abnormality in the bearing unit.
(1) Turn the shaft with your hands, and make sure that the bearing is rotated smoothly.
If any jam, vibration, great rotation torque (heavy), or uneven rotation is found, the bearing is judged to be faulty.
(2) Execute power run with no load and at a low speed, and check for abnormal noise and vibration.
(3) Carry out power run under the specified conditions, and check for abnormal noise, vibration, and temperature increase.

Table 14.2 shows the main faults that may occur during the test run inspection of the ball bearing unit and causes.

Table 14.2 Main faults occurred during test run inspection and their causes

Faults	Causes
Excessively great torque, uneven rotating torque	(1) Faulty installation, leading to preload onto bearing in axial direction (2) Inappropriate handling or installation, leading to interference of oil seal with flinger (slinger) (3) Excessive tightening of locknut (adapter), leading to too small internal clearance of bearing
Abnormal noise, abnormal vibration	(1) Insufficient tightening of set screw of bearing inner ring or mounting bolt of housing (2) Excessively large internal clearance of bearing (3) Bend on shaft, deviation of shaft center of shouldered shaft (4) Faulty accuracy of shaft (5) Insufficient rigidity or faulty flatness of base
Abnormal temperature increase	(1) Excessively small internal clearance of bearing (2) Inappropriate installation, leading to preload onto bearing in axial direction (3) Great load applied (4) Allowable rotational speed is exceeded (5) Faulty flatness of base (6) Inappropriate handling or installation, leading to interference of oil seal with flinger (slinger)

14.3 Periodic inspection

Koyo Ball Bearing Units do not need to be inspected, as well as standard sealed bearings. However, for especially important purposes, periodic inspection must be executed with appropriate intervals for safe operation of the bearing unit.

Since a ball bearing unit cannot be disassembled for inspection of internal status, check the appearance and operating status as shown below, and ensure that the bearing unit is free from fault or not.

(1) Appearance
(2) Looseness of set screw of bearing inner ring or mounting bolt of housing
(3) Vibration, noise
(4) Temperature
(5) Grease supply interval, check of supplied amount

Table 14.3 shows the main faults found during the periodic inspection of ball bearing unit and their causes.

If any fault is found in the ball bearing unit during the periodic inspection, immediately provide countermeasures against them, and carry out them. If the unit is judged to be difficult to be used, replace the bearing unit. It is important to replace the bearing unit to prevent expanding damage to other parts.

Table 14.3 Main faults found during periodic inspection and their causes

Faults	Causes
Excessively great torque (heavy)	(1) Degraded grease (2) Interference of oil seal with flinger (slinger) due to excessive supply of grease (3) Deformation of flinger (slinger), leading to interference with oil seal (4) Abnormal load due to expansion of shaft
Abnormal noise, abnormal vibration	(1) Insufficient tightening of set screw of bearing inner ring or mounting bolt of housing (2) Wear on fitting surface of shaft and bearing inner ring due to creep or fretting (3) Ingress of foreign matters into bearing (4) Damage to raceway surface or rolling contact surface of rolling element by rolling fatigue (5) Dent on raceway surface or rolling contact surface of rolling element by excessive load (6) Excessive warp or bend of shaft
Abnormal temperature increase	(1) Degraded grease (2) Interference of oil seal with flinger (slinger) due to excessive supply of grease (3) Deformation of flinger (slinger), leading to interference with oil seal (4) Looseness of set screw or locknut (adapter) of bearing inner ring (5) Abnormal load due to expansion of shaft (6) Damage to raceway surface or rolling contact surface of rolling element by rolling fatigue

14.4 Supply of grease

In Koyo Ball Bearing Unit, grease of good quality is packed with high quality oil seal. Therefore, grease life is long under standard operating conditions, and use without lubrication is enabled.

If the operating temperature is high or the unit is used in the environment exposed to dusts or high humidity, grease may be degraded faster, leading to faulty lubrication in a short period.

Since Koyo Ball Bearing Units are lubricated type bearings, fresh grease must be periodically supplied to the bearings, if they are used for such purposes that premature degradation of grease is expected.

The ball bearing units can maintain normal lubricated status and longer service life by supplying fresh grease.

14.4.1 Grease life and supply intervals

Grease life of a packed grease ball bearing, like a ball bearing unit, can be found by **Formula (4. 7)** in page 30. It is recommended to supply grease with the intervals of 1/4 to 1/3 of grease life found by the calculation shown above to ball bearing units, taking peculiarity of lubricating method and safety of bearing unit into consideration.

If the bearing unit is used under severe environmental conditions, including much dust and high humidity, the greasing intervals must be further shortened, taking these influences into consideration.

If operating conditions of the ball bearing unit are not clear or the unit is operated under standard conditions, consider the greasing intervals shown in **Table 14.4** as the guideline.

14.4.2 Greasing amount

Initial greasing amount of Koyo Ball Bearing Unit is approximately 30 to 35% of the internal space capacity of the bearing. If amount of grease supplied in the bearing is excessive, agitating resistance of grease increases, leading to abnormal heat or grease leak. DO NOT exceed the initial greasing amount.

Table 14.5 shows the recommended values of greasing amount of Koyo Ball Bearing Unit.

If the unit is used at a low speed, supply grease of double amount of that shown in **Table 14.5** is recommended to increase dust preventive performance.

[Remarks] 1. For greasing amount of the UK type bearing, use this table, too.
2. For greasing amount of the triple-lip seal type, 1.5 times of the values shown in this table are recommended.
3. Values shown in this table are applicable to standard grease (specific gravity : 0.9 g/ml). If you use greases of other specific gravity, adopt values converted with the same volume.

Table 14.5 Greasing amount of ball bearing unit (recommended)

Bore dia. No.	Greasing amount, g		
	UC200	UCX00	UC300
01	1.8		
02	1.8		
03	1.8		
04	1.8	–	–
05	1.8	3.3	4.2
06	3.3	4.5	5.9
07	4.5	5.6	8.1
08	5.6	6.5	10.1
09	6.5	7.7	12.6
10	7.7	10.3	18.1
11	10.3	13.2	25
12	13.2	14.9	31
13	14.9	18.2	39
14	18.2	21	47
15	21	25	56
16	25	31	65
17	31	38	78
18	38	48	90
19	–	–	108
20		69	141
21		–	165
22			198
24			237
26			291
28			337

Table 14.4 Greasing intervals of ball bearing unit (recommended)

Operating temperature, ℃		Grease Intervals			Bearing used	Grease supplied
over	up to	Substantially clean	Much dust	Much dust and muddy water		
	50	(3 months)	(2 months)	(1 month)	(Low temperature	(Lithium)
		not necessary	1 year	4 months	D2K2)[1)]	Lithium
50	70	1 year	4 months	1 month	Standard bearing	
70	100	6 months	2 months	2 weeks		
100	120	2 months	2 weeks	5 days	High temperature	Lithium
120	150	2 weeks	5 days	2 days	D1K2	
150	180	1 week	2 days	1 day		

Note 1) Greasing intervals in parentheses are applicable to the cold resistant type (D2K2).

[Remark] Greasing intervals shown in this table are applicable to the unit to be operated for 8 to 10 hours a day. If operating hour is out of this range, find the greasing interval proportionally by this table.

14.4.3 Types of grease supplied

Though various types of greases used for ball bearing units are available, if dissimilar grease, especially grease of which soap base is different, is mixed, lubricating performance may be significantly degraded.

Therefore, the same grease to be supplied as the initially packed grease must be used, and avoid use of dissimilar grease.

It is recommended to supply the same grease to Koyo Ball Bearing Unit as the initially packed grease (see **Table 2.3**). If you have no choice but to use other greases, you have to use grease of the same type (thickener) as the initially packed grease, if not the worst.

14.4.4 Supplying grease

When supplying grease to a ball bearing unit, use the grease nipple and grease gun installed to the housing (**Fig. 14.13**).

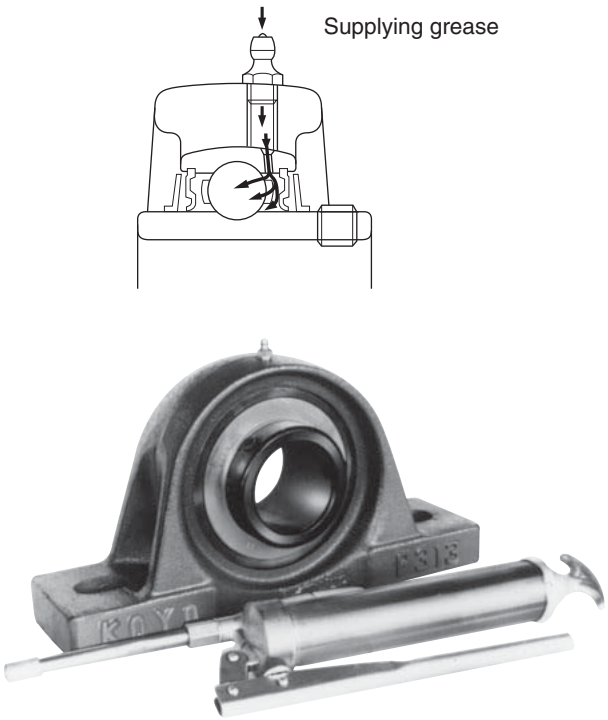

Fig. 14.13 Supplying grease to ball bearing unit

(1) Clean the grease nipple and area around it to prevent ingress of foreign matters.
(2) Clean the grease gun, and pack clean grease.
(3) Supply grease.

When supplying grease to the ball bearing unit, turning of the shaft with your hands or turning of the bearing unit at a low speed is recommended.

It allows appropriate discharge of old grease and even supply of fresh grease into the bearing.

If the grease supply with the grease nipple of the standard type (type A) is difficult because of the structure of the machine, grease nipples of the type B or type C are also available. Contact JTEKT.

Fig. 14.14 shows the types of grease nipples.

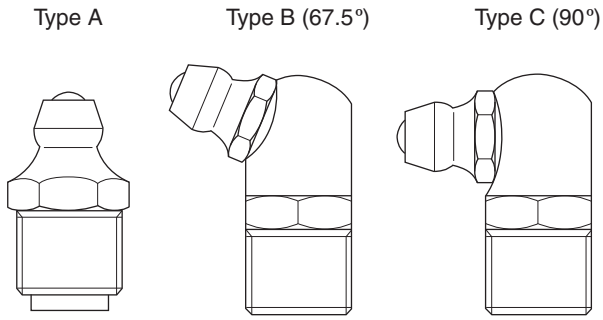

Fig. 14.14 Types of grease nipple for ball bearing unit

When supplying many ball bearing units with the centralized lubricating device, use soft grease with consistency from about 300 to 380, and provide piping appropriately so that grease of the specified amount is supplied.

Piping to the ball bearing unit should be provided with the tapped hole of the grease nipple of the housing. However, if size of the tapped hole on the housing differs from that of thread of the piping, use the reducing socket.

Fig. 14.15 shows the structure of the reducing socket for centralized lubricating.

When executing centralized lubricating, it is effective for the lubricating surface of the bearing to supply grease of the amount shown in **Table 14.5** by dividing into several times.

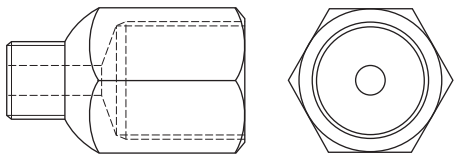

Fig. 14.15 Reducing socket for centralized lubricating

For details of grease nipples and reducing sockets, see **"16 Parts and accessory"**.

14.5 Replacing bearing

Since the bearings and the housings of Koyo ball bearing units are compatible, if a bearing is faulty, it can be replaced and used continuously.

Replacing procedures of the bearing of the ball bearing unit are shown below.

(1) Remove the bearing unit from the shaft and the base.
(2) Screw in the set screw so that the head of the set screw does not project out from the outside diameter surface of the inner ring of the bearing.
Head of the set screw may be hooked on the housing when the bearing is tilted.
(3) Turn the bearing by 90º with a handle of a hammer until the bearing is horizontal.
(4) Take out the bearing from the bearing groove of the housing.

To fit a new bearing to the housing, reverse the removing procedures.

15 Dimensional tables for ball bearing units

15 Dimensional tables for ball bearing units (contents)

UCP
Cylindrical bore (with set screws)
d 12 ~ (45) mm

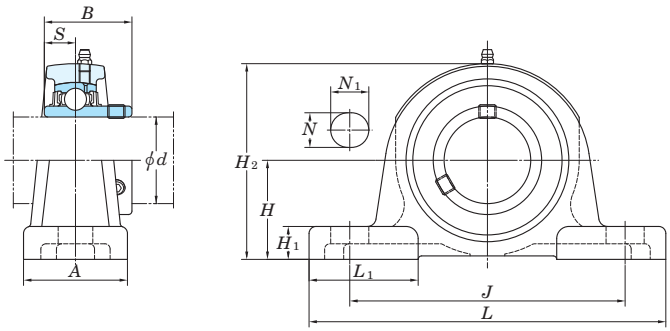

Shaft Dia. mm	Shaft Dia. inch	Dimensions inch / mm H	L	A	J	N	N1	H1	H2	L1	B	S	Bolt Size inch / mm	Standard Unit No.	Housing No.	Bearing No.
12	1/2	1 3/16	5	1 1/2	3 3/4	1/2	23/32	15/32	2 3/8	1 1/2	1.220	0.500	3/8	**UCP201**	P203	UC201
		30.2	127	38	95	13	18	12	60	38	31	12.7	M10	**UCP201-8**		UC201-8
15														**UCP202**		UC202
	5/8													**UCP202-10**		UC202-10
17														**UCP203**		UC203
20	3/4	1 5/16	5	1 1/2	3 3/4	1/2	23/32	1/2	2 17/32	1 1/2	1.220	0.500	3/8	**UCP204-12**	P204	UC204-12
		33.3	127	38	95	13	18	13	64	38	31	12.7	M10	**UCP204**		UC204
25	7/8	1 7/16	5 1/2	1 1/2	4 1/8	1/2	23/32	1/2	2 25/32	1 11/16	1.343	0.563	3/8	**UCP205-14**	P205	UC205-14
	15/16	36.5	140	38	105	13	18	13	71	43	34.1	14.3	M10	**UCP205-15**		UC205-15
														UCP205		UC205
	1													**UCP205-16**		UC205-16
		1 3/4	6 1/4	2	4 11/16	21/32	31/32	5/8	3 3/8	1 27/32	1.500	0.626	1/2	**UCPX05**	PX05	UCX05
	1	44.4	159	51	119	17	25	16	86	47	38.1	15.9	M14	**UCPX05-16**		UCX05-16
		1 49/64	6 7/8	1 3/4	5 3/16	21/32	25/32	5/8	3 11/32	2 5/32	1.496	0.591	1/2	**UCP305**	P305	UC305
	1	45	175	45	132	17	20	16	85	55	38	15	M14	**UCP305-16**		UC305-16
30	1 1/8													**UCP206-18**	P206	UC206-18
		1 11/16	6 1/2	1 7/8	4 3/4	21/32	13/16	19/32	3 5/16	2 3/32	1.500	0.626	1/2	**UCP206**		UC206
	1 3/16	42.9	165	48	121	17	21	15	84	53	38.1	15.9	M14	**UCP206-19**		UC206-19
	1 1/4													**UCP206-20**		UC206-20
		1 7/8	6 7/8	2 1/4	5	21/32	31/32	21/32	3 21/32	2 5/32	1.689	0.689	1/2	**UCPX06**	PX06	UCX06
	1 3/16	47.6	175	57	127	17	25	17	93	55	42.9	17.5	M14	**UCPX06-19**		UCX06-19
	1 1/4													**UCPX06-20**		UCX06-20
	–	1 31/32	7 3/32	1 31/32	5 1/2	21/32	25/32	21/32	3 3/4	2 3/32	1.693	0.669	1/2	**UCP306**	P306	UC306
35	1 1/4													**UCP207-20**	P207	UC207-20
	1 5/16													**UCP207-21**		UC207-21
	1 3/8	1 7/8	6 9/16	1 7/8	5	21/32	13/16	5/8	3 21/32	2	1.689	0.689	1/2	**UCP207-22**		UC207-22
		47.6	167	48	127	17	21	16	93	51	42.9	17.5	M14	**UCP207**		UC207
	1 7/16													**UCP207-23**		UC207-23
	1 3/8													**UCPX07-22**	PX07	UCX07-22
		2 1/8	8	2 1/4	5 11/16	21/32	1 3/16	3/4	4 1/8	2 17/32	1.937	0.748	1/2	**UCPX07**		UCX07
	1 7/16	54	203	57	144	17	30	19	105	64	49.2	19	M14	**UCPX07-23**		UCX07-23
	–	2 13/64	8 9/32	2 7/32	6 5/16	21/32	31/32	3/4	4 7/32	2 9/16	1.890	0.748	1/2	**UCP307**	P307	UC307
40	1 1/2													**UCP208-24**	P208	UC208-24
	1 9/16	1 15/16	7 1/4	2 1/8	5 13/32	21/32	13/16	21/32	3 27/32	2 1/4	1.937	0.748	1/2	**UCP208-25**		UC208-25
		49.2	184	54	137	17	21	17	98	57	49.2	19	M14	**UCP208**		UC208
	1 1/2	2 5/16	8 3/4	2 5/8	6 1/8	25/32	1 1/4	13/16	4 1/2	2 25/32	1.937	0.748	5/8	**UCPX08-24**	PX08	UCX08-24
		58.7	222	67	156	20	32	21	114	71	49.2	19	M16	**UCPX08**		UCX08
	1 1/2	2 23/64	8 21/32	2 3/8	6 11/16	21/32	1 1/16	3/4	4 21/32	2 9/16	2.047	0.748	1/2	**UCP308-24**	P308	UC308-24
		60	220	60	170	17	27	19	118	65	52	19	M14	**UCP308**		UC308
45	1 5/8													**UCP209-26**	P209	UC209-26
	1 11/16	2 1/8	7 15/32	2 1/8	5 3/4	21/32	13/16	21/32	4 3/16	2 3/8	1.937	0.748	1/2	**UCP209-27**		UC209-27
	1 3/4	54	190	54	146	17	21	17	106	60	49.2	19	M14	**UCP209-28**		UC209-28
														UCP209		UC209
	1 3/4	2 5/16	8 3/4	2 5/8	6 1/8	25/32	1 5/16	13/16	4 9/16	2 25/32	2.031	0.748	5/8	**UCPX09-28**	PX09	UCX09-28
		58.7	222	67	156	20	33	21	116	71	51.6	19	M16	**UCPX09**		UCX09

Remarks 1. In Part No. of unit and units with covers, fitting codes follow bore diameter numbers. (See **Table 10.5** in P.51.)
2. Part No. of applicable grease nipples are shown below.
A-1/4-28UNF ..... 201~210, X05~X09, 305~308
A-PT1/8 ..... 211~218, X10~X20, 309~328

With Pressed Steel Covers

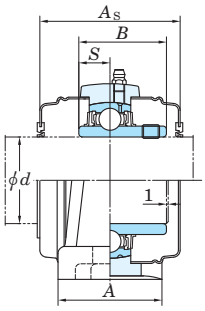

With Cast Iron Covers

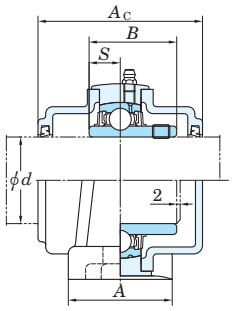

Variations of tolerance of distance from mounting bottom to center of spherical bore (Δ_{Hs})

Unit : mm

Housing No.			Δ_{Hs}
P203~P210	PX05~PX10	P305~P310	±0.15
P211~P218	PX11~PX18	P311~P318	±0.2
	PX20	P319~P328	±0.3

Forms and dimensions of H_{2c} of P204JE3 and P205JE3 (housing with cast iron covers) are shown below.

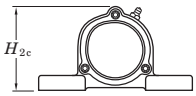

P204JE3 H_{2c} = 70 mm
P205JE3 H_{2c} = 77 mm

Mass	Basic Load Ratings kN		Factor	With Pressed Steel Covers				Mass	With Cast Iron Covers				Mass
				Unit No.		Dimension mm	inch		Unit No.		Dimension mm	inch	
kg	C_r	C_{0r}	f_0	Open Ends Type	Closed End Type	A_s		kg	Open Ends Type	Closed End Type	A_c		kg
0.63				UCP201C	UCP201CD	44	1 23/32	0.63	–	–	–	–	–
0.63				–	–	–	–	–	–	–	–	–	–
0.61	12.8	6.65	13.2	UCP202C	UCP202CD	44	1 23/32	0.61	–	–	–	–	–
0.61				–	–	–	–	–	–	–	–	–	–
0.60				UCP203C	UCP203CD	44	1 23/32	0.60	–	–	–	–	–
0.66	12.8	6.65	13.2	–	–	–	–	–	–	–	–	–	–
0.66				UCP204C	UCP204CD	44	1 23/32	0.66	UCP204FC	UCP204FCD	62	2 7/16	0.96
0.80				–	–	–	–	–	–	–	–	–	–
0.80	14.0	7.85	13.9	–	–	–	–	–	–	–	–	–	–
0.80				UCP205C	UCP205CD	48	1 7/8	0.80	UCP205FC	UCP205FCD	66	2 19/32	1.2
0.80				–	–	–	–	–	–	–	–	–	–
1.5	19.5	11.3	13.9	UCPX05C	UCPX05CD	52	2 1/16	1.5	–	–	–	–	–
1.5				–	–	–	–	–	–	–	–	–	–
1.7	21.2	10.9	12.6	–	–	–	–	–	UCP305C	UCP305CD	76	3	2.3
1.7				–	–	–	–	–	–	–	–	–	–
1.3				–	–	–	–	–	–	–	–	–	–
1.3	19.5	11.3	13.9	UCP206C	UCP206CD	52	2 1/16	1.3	UCP206FC	UCP206FCD	70	2 3/4	1.8
1.3				–	–	–	–	–	–	–	–	–	–
1.3				–	–	–	–	–	–	–	–	–	–
2.1				UCPX06C	UCPX06CD	59	2 5/16	2.1	–	–	–	–	–
2.1	25.7	15.4	13.9	–	–	–	–	–	–	–	–	–	–
2.1				–	–	–	–	–	–	–	–	–	–
2.2	26.7	15.0	13.3	–	–	–	–	–	UCP306C	UCP306CD	82	3 7/32	2.8
1.6				–	–	–	–	–	–	–	–	–	–
1.6				–	–	–	–	–	–	–	–	–	–
1.6	25.7	15.4	13.9	–	–	–	–	–	–	–	–	–	–
1.6				UCP207C	UCP207CD	59	2 5/16	1.6	UCP207FC	UCP207FCD	78	3 1/16	2.3
1.6				–	–	–	–	–	–	–	–	–	–
2.7				–	–	–	–	–	–	–	–	–	–
2.7	29.1	17.8	14.0	UCPX07C	UCPX07CD	68	2 11/16	2.7	–	–	–	–	–
2.7				–	–	–	–	–	–	–	–	–	–
3.0	33.4	19.3	13.2	–	–	–	–	–	UCP307C	UCP307CD	88	3 15/32	3.8
2.0				–	–	–	–	–	–	–	–	–	–
2.0	29.1	17.8	14.0	–	–	–	–	–	–	–	–	–	–
2.0				UCP208C	UCP208CD	68	2 11/16	2.0	UCP208FC	UCP208FCD	86	3 3/8	2.8
3.5	34.1	21.3	14.0	–	–	–	–	–	–	–	–	–	–
3.5				UCPX08C	UCPX08CD	68	2 11/16	3.5	–	–	–	–	–
3.8	40.7	24.0	13.2	–	–	–	–	–	–	–	–	–	–
3.8				–	–	–	–	–	UCP308C	UCP308CD	96	3 25/32	4.8
2.2				–	–	–	–	–	–	–	–	–	–
2.2	34.1	21.3	14.0	–	–	–	–	–	–	–	–	–	–
2.2				–	–	–	–	–	–	–	–	–	–
2.2				UCP209C	UCP209CD	68	2 11/16	2.2	UCP209FC	UCP209FCD	88	3 15/32	3.0
3.7	35.1	23.3	14.4	–	–	–	–	–	–	–	–	–	–
3.7				UCPX09C	UCPX09CD	73	2 7/8	3.7	–	–	–	–	–

3. As for the triple-lip seal type product (from 201 to 205 are the double-lip seal type products), supplementary code L3 (or L2) follows the Part No. of unit or bearing. (Example of Part No. : UCP206JL3, UC206L3)
4. For the dimensions and forms of applicable bearings, see the dimensional tables of ball bearing for unit.
5. Representative examples of the forms of housing are indicated.

UCP
Cylindrical bore (with set screws)
d (45) ~ (75) mm

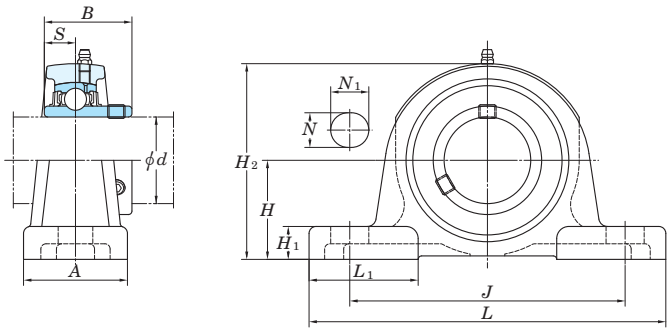

Shaft Dia. mm	Shaft Dia. inch	Dimensions inch / mm											Bolt Size inch / mm	Standard Unit No.	Standard Housing No.	Standard Bearing No.
d		H	L	A	J	N	N_1	H_1	H_2	L_1	B	S				
45	1 3/4	2 41/64	9 21/32	2 5/8	7 15/32	25/32	1 3/16	13/16	5 3/16	2 15/16	2.244	0.866	5/8	UCP309-28	P309	UC309-28
		67	245	67	190	20	30	21	132	75	57	22	M16	UCP309		UC309
50	1 7/8													UCP210-30	P210	UC210-30
	1 15/16	2 1/4	8 1/8	2 3/8	6 1/4	25/32	7/8	3/4	4 7/16	2 15/32	2.031	0.748	5/8	UCP210-31		UC210-31
		57.2	206	60	159	20	22	19	113	63	51.6	19	M16	UCP210		UC210
	2													UCP210-32		UC210-32
	1 15/16	2 1/2	9 1/2	2 7/8	6 23/32	25/32	1 13/32	7/8	4 31/32	3	2.189	0.874	5/8	UCPX10-31	PX10	UCX10-31
		63.5	241	73	171	20	36	22	126	76	55.6	22.2	M16	UCPX10		UCX10
	2													UCPX10-32		UCX10-32
	–	2 61/64	10 13/16	2 15/16	8 11/32	25/32	1 3/8	15/16	5 13/16	3 15/32	2.402	0.866	5/8	UCP310	P310	UC310
		75	275	75	212	20	35	24	148	88	61	22	M16			
55	2													UCP211-32	P211	UC211-32
	2 1/8	2 1/2	8 5/8	2 3/8	6 23/32	25/32	7/8	3/4	4 29/32	2 3/4	2.189	0.874	5/8	UCP211-34		UC211-34
		63.5	219	60	171	20	22	19	125	70	55.6	22.2	M16	UCP211		UC211
	2 3/16													UCP211-35		UC211-35
		2 3/4	10 1/4	3 1/8	7 1/4	31/32	1 13/32	1 3/32	5 15/32	3 9/32	2.563	1.000	3/4	UCPX11	PX11	UCX11
	2 3/16	69.8	260	79	184	25	36	28	139	83	65.1	25.4	M20	UCPX11-35		UCX11-35
	2 1/4													UCPX11-36		UCX11-36
	2	3 5/32	12 7/32	3 5/32	9 9/32	25/32	1 1/2	1 1/16	6 7/32	3 17/32	2.598	0.984	5/8	UCP311-32	P311	UC311-32
		80	310	80	236	20	38	27	158	90	66	25	M16	UCP311		UC311
60	2 1/4													UCP212-36	P212	UC212-36
		2 3/4	9 1/2	2 3/4	7 1/4	25/32	31/32	7/8	5 7/16	3	2.563	1.000	5/8	UCP212		UC212
	2 3/8	69.8	241	70	184	20	25	22	138	76	65.1	25.4	M16	UCP212-38		UC212-38
	2 7/16													UCP212-39		UC212-39
		3	11 1/4	3 1/4	8	31/32	1 9/16	1 3/32	5 31/32	3 15/32	2.563	1.000	3/4	UCPX12	PX12	UCX12
	2 7/16	76.2	286	83	203	25	40	28	152	88	65.1	25.4	M20	UCPX12-39		UCX12-39
	–	3 11/32	13	3 11/32	9 27/32	31/32	1 1/2	1 5/32	6 9/16	4 1/16	2.795	1.024	3/4	UCP312	P312	UC312
		85	330	85	250	25	38	29	167	103	71	26	M20			
65	2 1/2	3	10 7/16	2 3/4	8	31/32	1 3/16	31/32	5 29/32	3 1/16	2.563	1.000	3/4	UCP213-40	P213	UC213-40
		76.2	265	70	203	25	30	25	150	78	65.1	25.4	M20	UCP213		UC213
	2 1/2	3	11 1/4	3 1/4	8	31/32	1 9/16	1 3/32	6 3/32	3 15/32	2.937	1.189	3/4	UCPX13-40	PX13	UCX13-40
		76.2	286	83	203	25	40	28	155	88	74.6	30.2	M20	UCPX13		UCX13
	2 1/2	3 35/64	13 3/8	3 17/32	10 1/4	31/32	1 1/2	1 1/4	6 15/16	4 11/32	2.953	1.181	3/4	UCP313-40	P313	UC313-40
		90	340	90	260	25	38	32	176	110	75	30	M20	UCP313		UC313
70	2 3/4	3 1/8	10 15/32	2 27/32	8 9/32	31/32	1 3/16	1 3/32	6 5/32	3 1/16	2.937	1.189	3/4	UCP214-44	P214	UC214-44
		79.4	266	72	210	25	30	28	156	78	74.6	30.2	M20	UCP214		UC214
	2 3/4	3 1/2	13	3 1/2	9	1 1/16	1 31/32	1 1/4	6 23/32	3 27/32	3.063	1.331	7/8	UCPX14-44	PX14	UCX14-44
		88.9	330	89	229	27	50	32	171	98	77.8	33.3	M22	UCPX14		UCX14
	2 3/4	3 47/64	14 3/16	3 17/32	11 1/32	1 1/16	1 9/16	1 3/8	7 5/16	4 11/32	3.071	1.299	7/8	UCP314-44	P314	UC314-44
		95	360	90	280	27	40	35	186	110	78	33	M22	UCP314		UC314
75	2 15/16	3 1/4	10 13/16	2 29/32	8 17/32	31/32	1 3/16	1 3/32	6 3/8	3 5/32	3.063	1.311	3/4	UCP215-47	P215	UC215-47
		82.6	275	74	217	25	30	28	162	80	77.8	33.3	M20	UCP215		UC215
	3													UCP215-48		UC215-48
	2 15/16	3 1/2	13	3 1/2	9	1 1/16	1 31/32	1 1/4	6 7/8	3 29/32	3.252	1.311	7/8	UCPX15-47	PX15	UCX15-47
		88.9	330	89	229	27	50	32	175	99	82.6	33.3	M22	UCPX15		UCX15
	3													UCPX15-48		UCX15-48

Remarks 1. In Part No. of unit and units with covers, fitting codes follow bore diameter numbers. (See **Table 10.5** in P.51.)
2. Part No. of applicable grease nipples are shown below.
A-1/4-28UNF ..... 201~210, X05~X09, 305~308
A-PT1/8 ..... 211~218, X10~X20, 309~328

With Pressed Steel Covers

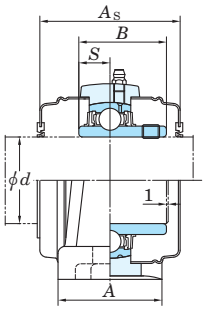

With Cast Iron Covers

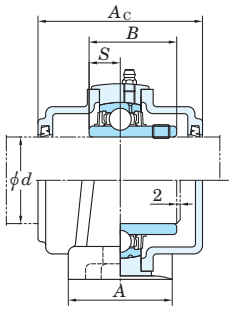

Variations of tolerance of distance from mounting bottom to center of spherical bore (Δ_{Hs})

Unit : mm

Housing No.			Δ_{Hs}
P203~P210	PX05~PX10	P305~P310	±0.15
P211~P218	PX11~PX18	P311~P318	±0.2
	PX20	P319~P328	±0.3

Forms and dimensions of H_{2c} of P204JE3 and P205JE3 (housing with cast iron covers) are shown below.

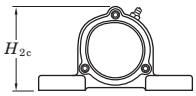

P204JE3 H_{2c} = 70 mm
P205JE3 H_{2c} = 77 mm

Mass	Basic Load Ratings kN		Factor	With Pressed Steel Covers				Mass	With Cast Iron Covers				Mass
				Unit No.		Dimension mm	inch		Unit No.		Dimension mm	inch	
kg	C_r	C_{0r}	f_0	Open Ends Type	Closed End Type	A_s		kg	Open Ends Type	Closed End Type	A_c		kg
4.9	48.9	29.5	13.3	–	–	–	–	–	–	–	–	–	–
4.9				–	–	–	–	–	UCP309C	UCP309CD	102	4 1/32	6.2
2.9	35.1	23.3	14.4	–	–	–	–	–	–	–	–	–	–
2.9				–	–	–	–	–	–	–	–	–	–
2.9				UCP210C	UCP210CD	73	2 7/8	2.9	UCP210FC	UCP210FCD	97	3 13/16	3.9
2.9				–	–	–	–	–	–	–	–	–	–
4.6	43.4	29.4	14.4	–	–	–	–	–	–	–	–	–	–
4.6				UCPX10C	UCPX10CD	75	2 15/16	4.6	–	–	–	–	–
4.6				–	–	–	–	–	–	–	–	–	–
6.6	62.0	38.3	13.2	–	–	–	–	–	UCP310C	UCP310CD	110	4 11/32	8.2
3.6	43.4	29.4	14.4	–	–	–	–	–	–	–	–	–	–
3.6				–	–	–	–	–	–	–	–	–	–
3.6				UCP211C	UCP211CD	75	2 15/16	3.6	UCP211FC	UCP211FCD	99	3 29/32	4.8
3.6				–	–	–	–	–	–	–	–	–	–
6.5	52.4	36.2	14.4	UCPX11C	UCPX11CD	88	3 15/32	6.5	–	–	–	–	–
6.5				–	–	–	–	–	–	–	–	–	–
6.5				–	–	–	–	–	–	–	–	–	–
7.9	71.6	45.0	13.2	–	–	–	–	–	–	–	–	–	–
7.9				–	–	–	–	–	UCP311C	UCP311CD	114	4 1/2	9.7
4.9	52.4	36.2	14.4	–	–	–	–	–	–	–	–	–	–
4.9				UCP212C	UCP212CD	88	3 15/32	4.9	UCP212FC	UCP212FCD	114	4 1/2	6.4
4.9				–	–	–	–	–	–	–	–	–	–
4.9				–	–	–	–	–	–	–	–	–	–
7.7	57.2	40.1	14.4	UCPX12C	UCPX12CD	88	3 15/32	7.7	–	–	–	–	–
7.7				–	–	–	–	–	–	–	–	–	–
9.5	81.9	52.2	13.2	–	–	–	–	–	UCP312C	UCP312CD	124	4 7/8	11.8
5.9	57.2	40.1	14.4	–	–	–	–	–	–	–	–	–	–
5.9				UCP213C	UCP213CD	88	3 15/32	5.9	UCP213FC	UCP213FCD	114	4 1/2	7.6
8.1	62.2	44.1	14.5	–	–	–	–	–	–	–	–	–	–
8.1				UCPX13C	UCPX13CD	98	3 27/32	8.1	–	–	–	–	–
10.7	92.7	59.9	13.2	–	–	–	–	–	–	–	–	–	–
10.7				–	–	–	–	–	UCP313C	UCP313CD	122	4 13/16	12.8
6.8	62.2	44.1	14.5	–	–	–	–	–	–	–	–	–	–
6.8				UCP214C	UCP214CD	98	3 27/32	6.8	UCP214FC	UCP214FCD	124	4 7/8	8.7
10.2	67.4	48.3	14.5	–	–	–	–	–	–	–	–	–	–
10.2				UCPX14C	UCPX14CD	98	3 27/32	10.2	–	–	–	–	–
12.4	104	68.2	13.2	–	–	–	–	–	–	–	–	–	–
12.4				–	–	–	–	–	UCP314C	UCP314CD	124	4 7/8	14.7
7.4	67.4	48.3	14.5	–	–	–	–	–	–	–	–	–	–
7.4				UCP215C	UCP215CD	98	3 27/32	7.4	UCP215FC	UCP215FCD	124	4 7/8	9.3
7.4				–	–	–	–	–	–	–	–	–	–
10.8	72.7	53.0	14.6	–	–	–	–	–	–	–	–	–	–
10.8				UCPX15C	UCPX15CD	108	4 1/4	10.8	–	–	–	–	–
10.8				–	–	–	–	–	–	–	–	–	–

3. As for the triple-lip seal type product (from 201 to 205 are the double-lip seal type products), supplementary code L3 (or L2) follows the Part No. of unit or bearing. (Example of Part No. : UCP206JL3, UC206L3)
4. For the dimensions and forms of applicable bearings, see the dimensional tables of ball bearing for unit.
5. Representative examples of the forms of housing are indicated.

UCP
Cylindrical bore (with set screws)
d (75) ~ 140 mm

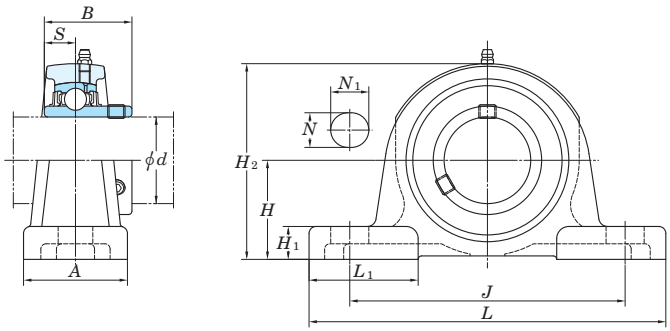

Shaft Dia. mm	Shaft Dia. inch	Dimensions inch / mm											Bolt Size inch / mm	Standard Unit No.	Standard Housing No.	Standard Bearing No.
d		H	L	A	J	N	N_1	H_1	H_2	L_1	B	S				
75	2 15/16	3 15/16	14 31/32	3 15/16	11 13/32	1 1/16	1 9/16	1 3/8	7 25/32	4 7/32	3.228	1.260	7/8	UCP315-47	P315	UC315-47
		100	380	100	290	27	40	35	198	107	82	32	M22	UCP315		UC315
	3													UCP315-48		UC315-48
80	3 1/8	3 1/2	11 1/2	3 1/16	9 1/8	31/32	1 3/8	1 1/4	6 27/32	3 3/8	3.252	1.311	3/4	UCP216-50	P216	UC216-50
		88.9	292	78	232	25	35	32	174	86	82.6	33.3	M20	UCP216		UC216
	–	4	15	4	11 1/8	1 1/16	2 9/32	1 11/32	7 11/16	4 9/16	3.374	1.343	7/8	UCPX16	PX16	UCX16
		101.6	381	102	283	27	58	34	195	116	85.7	34.1	M22			
	–	4 11/64	15 3/4	4 11/32	11 13/16	1 1/16	1 9/16	1 3/8	8 7/32	4 23/32	3.386	1.339	7/8	UCP316	P316	UC316
		106	400	110	300	27	40	35	209	120	86	34	M22			
85	3 1/4	3 3/4	12 7/32	3 9/32	9 23/32	31/32	1 9/16	1 1/4	7 9/32	3 17/32	3.374	1.343	3/4	UCP217-52	P217	UC217-52
		95.2	310	83	247	25	40	32	185	90	85.7	34.1	M20	UCP217		UC217
	3 7/16	4	15	4	11 1/8	1 1/16	2 3/8	1 11/32	7 7/8	4 9/16	3.780	1.563	7/8	UCPX17	PX17	UCX17
		101.6	381	102	283	27	60	34	200	116	96	39.7	M22	UCPX17-55		UCX17-55
	–	4 13/32	16 17/32	4 11/32	12 19/32	1 5/16	1 25/32	1 9/16	8 21/32	4 23/32	3.780	1.575	1	UCP317	P317	UC317
		112	420	110	320	33	45	40	220	120	96	40	M27			
90	3 1/2	4	12 7/8	3 15/32	10 5/16	1 1/16	1 25/32	1 11/32	7 25/32	4 3/32	3.780	1.563	7/8	UCP218-56	P218	UC218-56
		101.6	327	88	262	27	45	34	198	104	96	39.7	M22	UCP218		UC218
	–	4	15	4 3/8	11 1/8	1 1/16	2 3/8	1 1/2	8 1/32	4 9/16	4.094	1.689	7/8	UCPX18	PX18	UCX18
		101.6	381	111	283	27	60	38	204	116	104	42.9	M22			
	3 1/2	4 41/64	16 15/16	4 11/32	13	1 5/16	1 25/32	1 9/16	9 7/32	4 23/32	3.780	1.575	1	UCP318-56	P318	UC318-56
		118	430	110	330	33	45	40	234	120	96	40	M27	UCP318		UC318
95	–	4 59/64	18 1/2	4 23/32	14 3/16	1 13/32	1 31/32	1 13/16	9 3/4	4 29/32	4.055	1.614	1 1/8	UCP319	P319	UC319
		125	470	120	360	36	50	46	248	125	103	41	M30			
100	3 15/16	5	17	4 3/4	13 1/4	1 5/16	2 9/16	1 25/32	9 21/32	4 31/32	4.626	1.937	1	UCPX20	PX20	UCX20
	4	127	432	121	337	33	65	45	245	126	117.5	49.2	M27	UCPX20-63		UCX20-63
														UCPX20-64		UCX20-64
	3 15/16	5 33/64	19 9/32	4 23/32	14 31/32	1 13/32	1 31/32	1 13/16	10 3/4	5 1/2	4.252	1.654	1 1/8	UCP320	P320	UC320
	4	140	490	120	380	36	50	46	273	140	108	42	M30	UCP320-63		UC320-63
														UCP320-64		UC320-64
105	–	5 33/64	19 9/32	4 23/32	14 31/32	1 13/32	1 31/32	1 13/16	10 15/16	5 1/2	4.409	1.732	1 1/8	UCP321	P321	UC321
		140	490	120	380	36	50	46	278	140	112	44	M30			
110	–	5 29/32	20 15/32	5 1/2	15 3/4	1 9/16	2 5/32	1 31/32	11 21/32	5 29/32	4.606	1.811	1 1/4	UCP322	P322	UC322
		150	520	140	400	40	55	50	296	150	117	46	M33			
120	–	6 19/64	22 7/16	5 1/2	17 23/32	1 9/16	2 5/32	1 31/32	12 7/16	6 5/16	4.961	2.008	1 1/4	UCP324	P324	UC324
		160	570	140	450	40	55	50	316	160	126	51	M33			
130	–	7 3/32	23 5/8	5 1/2	18 29/32	1 9/16	2 5/32	1 31/32	13 21/32	7 11/16	5.315	2.126	1 1/4	UCP326	P326	UC326
		180	600	140	480	40	55	50	355	195	135	54	M33			
140	–	7 7/8	24 13/32	5 1/2	19 11/16	1 9/16	2 5/32	2 3/8	15 15/32	7 9/32	5.709	2.323	1 1/4	UCP328	P328	UC328
		200	620	140	500	40	55	60	393	185	145	59	M33			

Remarks 1. In Part No. of unit and units with covers, fitting codes follow bore diameter numbers. (See **Table 10.5** in P.51.)
2. Part No. of applicable grease nipples are shown below.
A-1/4-28UNF ..... 201~210, X05~X09, 305~308
A-PT1/8 ..... 211~218, X10~X20, 309~328

With Pressed Steel Covers

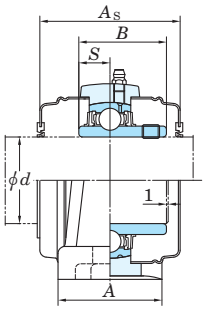

With Cast Iron Covers

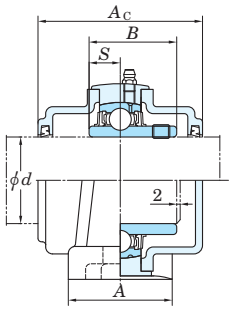

Variations of tolerance of distance from mounting bottom to center of spherical bore (Δ_{Hs})

Unit : mm

Housing No.			Δ_{Hs}
P203~P210	PX05~PX10	P305~P310	±0.15
P211~P218	PX11~PX18	P311~P318	±0.2
	PX20	P319~P328	±0.3

Forms and dimensions of H_{2c} of P204JE3 and P205JE3 (housing with cast iron covers) are shown below.

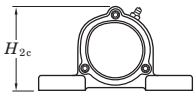

P204JE3 H_{2c} = 70 mm
P205JE3 H_{2c} = 77 mm

Mass	Basic Load Ratings kN		Factor	With Pressed Steel Covers					With Cast Iron Covers				
				Unit No.		Dimension mm	inch	Mass	Unit No.		Dimension mm	inch	Mass
kg	C_r	C_{0r}	f_0	Open Ends Type	Closed End Type	A_s		kg	Open Ends Type	Closed End Type	A_c		kg
14.8				–	–	–	–	–	–	–	–	–	–
14.8	113	77.2	13.2	–	–	–	–	–	UCP315C	UCP315CD	134	5 9/32	17.3
14.8				–	–	–	–	–	–	–	–	–	–
9.0	72.7	53.0	14.6	–	–	–	–	–	–	–	–	–	–
9.0				UCP216C	UCP216CD	108	4 1/4	9.0	UCP216FC	UCP216FCD	138	5 7/16	11.4
15.3	84.0	61.9	14.5	UCPX16C	UCPX16CD	112	4 13/32	15.3	–	–	–	–	–
18.5	123	86.7	13.3	–	–	–	–	–	UCP316C	UCP316CD	138	5 7/16	21.4
10.8	84.0	61.9	14.5	–	–	–	–	–	–	–	–	–	–
10.8				UCP217C	UCP217CD	112	4 13/32	10.8	UCP217FC	UCP217FCD	142	5 19/32	13.5
16.1	96.1	71.5	14.5	UCPX17C	UCPX17CD	122	4 13/16	16.1	–	–	–	–	–
16.1				–	–	–	–	–	–	–	–	–	–
20.3	133	96.8	13.3	–	–	–	–	–	UCP317C	UCP317CD	146	5 3/4	23.6
13.9	96.1	71.5	14.5	–	–	–	–	–	–	–	–	–	–
13.9				UCP218C	UCP218CD	122	4 13/16	13.9	UCP218FC	UCP218FCD	152	6	17.0
19.1	109	81.9	14.4	–	–	–	–	–	UCPX18C	UCPX18C	158	6 7/32	22.5
22.8	143	107	13.3	–	–	–	–	–	–	–	–	–	–
22.8				–	–	–	–	–	UCP318C	UCP318CD	150	5 29/32	26.6
29.0	153	119	13.3	–	–	–	–	–	UCP319C	UCP319CD	162	6 3/8	33.3
30.4				–	–	–	–	–	UCPX20C	UCPX20CD	186	7 5/16	34.9
30.4	133	105	14.4	–	–	–	–	–	–	–	–	–	–
30.4				–	–	–	–	–	–	–	–	–	–
35.1				–	–	–	–	–	UCP320C	UCP320CD	174	6 27/32	40.7
35.1	173	141	13.2	–	–	–	–	–	–	–	–	–	–
35.1				–	–	–	–	–	–	–	–	–	–
37.6	184	153	13.2	–	–	–	–	–	UCP321C	UCP321CD	178	7	43.6
44.0	205	180	13.2	–	–	–	–	–	UCP322C	UCP322CD	188	7 13/32	50.8
55.4	207	185	13.5	–	–	–	–	–	UCP324C	UCP324CD	196	7 23/32	64.9
72.1	229	214	13.6	–	–	–	–	–	UCP326C	UCP326CD	214	8 7/16	84.2
92.5	253	246	13.6	–	–	–	–	–	UCP328C	UCP328CD	222	8 3/4	108

3. As for the triple-lip seal type product (from 201 to 205 are the double-lip seal type products), supplementary code L3 (or L2) follows the Part No. of unit or bearing. (Example of Part No. : UCP206JL3, UC206L3)
4. For the dimensions and forms of applicable bearings, see the dimensional tables of ball bearing for unit.
5. Representative examples of the forms of housing are indicated.

NAP
Cylindrical bore
(with eccentric locking collar)
d 12 ~ 75 mm

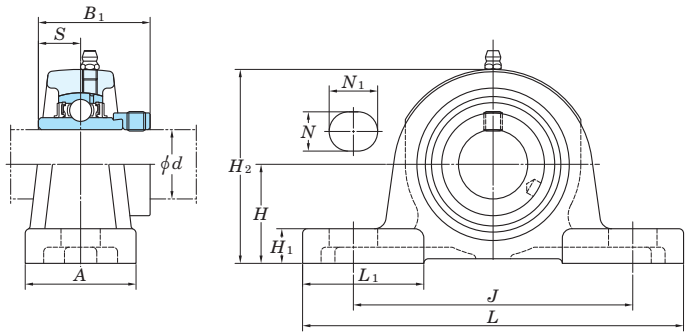

Shaft Dia. mm	Shaft Dia. inch	Dimensions inch / mm											Bolt Size inch / mm	Unit No.	Housing No.	Bearing No.
d		H	L	A	J	N	N_1	H_1	H_2	L_1	B_1	S				
12														**NAP201**		NA201
	1/2	1 3/16	5	1 1/2	3 3/4	1/2	23/32	15/32	2 3/8	1 1/2	1.720	0.673	3/8	**NAP201-8**		NA201-8
15		30.2	127	38	95	13	18	12	60	38	43.7	17.1	M10	**NAP202**	P203	NA202
	5/8													**NAP202-10**		NA202-10
17														**NAP203**		NA203
20	3/4	1 5/16	5	1 1/2	3 3/4	1/2	23/32	1/2	2 17/32	1 1/2	1.720	0.673	3/8	**NAP204-12**	P204	NA204-12
		33.3	127	38	95	13	18	13	64	38	43.7	17.1	M10	**NAP204**		NA204
	7/8													**NAP205-14**		NA205-14
25	15/16	1 7/16	5 1/2	1 1/2	4 1/8	1/2	23/32	1/2	2 25/32	1 11/16	1.748	0.689	3/8	**NAP205-15**	P205	NA205-15
		36.5	140	38	105	13	18	13	71	43	44.4	17.5	M10	**NAP205**		NA205
	1													**NAP205-16**		NA205-16
	1 1/8													**NAP206-18**		NA206-18
30		1 11/16	6 1/2	1 7/8	4 3/4	21/32	13/16	19/32	3 5/16	2 3/32	1.906	0.720	1/2	**NAP206**	P206	NA206
	1 3/16	42.9	165	48	121	17	21	15	84	53	48.4	18.3	M14	**NAP206-19**		NA206-19
	1 1/4													**NAP206-20**		NA206-20
	1 1/4													**NAP207-20**		NA207-20
	1 5/16													**NAP207-21**		NA207-21
35	1 3/8	1 7/8	6 9/16	1 7/8	5	21/32	13/16	5/8	3 21/32	2	2.012	0.740	1/2	**NAP207-22**	P207	NA207-22
		47.6	167	48	127	17	21	16	93	51	51.1	18.8	M14	**NAP207**		NA207
	1 7/16													**NAP207-23**		NA207-23
	1 1/2													**NAP208-24**		NA208-24
40	1 9/16	1 15/16	7 1/4	2 1/8	5 13/32	21/32	13/16	21/32	3 27/32	2 1/4	2.217	0.843	1/2	**NAP208-25**	P208	NA208-25
		49.2	184	54	137	17	21	17	98	57	56.3	21.4	M14	**NAP208**		NA208
	1 5/8													**NAP209-26**		NA209-26
45	1 11/16	2 1/8	7 15/32	2 1/8	5 3/4	21/32	13/16	21/32	4 3/16	2 3/8	2.217	0.843	1/2	**NAP209-27**	P209	NA209-27
	1 3/4	54	190	54	146	17	21	17	106	60	56.3	21.4	M14	**NAP209-28**		NA209-28
														NAP209		NA209
	1 7/8													**NAP210-30**		NA210-30
50	1 15/16	2 1/4	8 1/8	2 3/8	6 1/4	25/32	7/8	3/4	4 7/16	2 15/32	2.469	0.969	5/8	**NAP210-31**	P210	NA210-31
		57.2	206	60	159	20	22	19	113	63	62.7	24.6	M16	**NAP210**		NA210
	2													**NAP210-32**		NA210-32
	2													**NAP211-32**		NA211-32
55	2 1/8	2 1/2	8 5/8	2 3/8	6 23/32	25/32	7/8	3/4	4 29/32	2 3/4	2.811	1.094	5/8	**NAP211-34**	P211	NA211-34
		63.5	219	60	171	20	22	19	125	70	71.4	27.8	M16	**NAP211**		NA211
	2 3/16													**NAP211-35**		NA211-35
	2 1/4													**NAP212-36**		NA212-36
60		2 3/4	9 1/2	2 3/4	7 1/4	25/32	31/32	7/8	5 7/16	3	3.063	1.220	5/8	**NAP212**	P212	NA212
	2 3/8	69.8	241	70	184	20	25	22	138	76	77.8	31	M16	**NAP212-38**		NA212-38
	2 7/16													**NAP212-39**		NA212-39
65	2 1/2	3	10 7/16	2 3/4	8	31/32	1 3/16	31/32	5 29/32	3 1/16	3.374	1.343	3/4	**NAP213-40**	P213	NA213-40
		76.2	265	70	203	25	30	25	150	78	85.7	34.1	M20	**NAP213**		NA213
70	2 3/4	3 1/8	10 15/32	2 27/32	8 9/32	31/32	1 3/16	1 3/32	6 5/32	3 1/16	3.374	1.343	3/4	**NAP214-44**	P214	NA214-44
		79.4	266	72	210	25	30	28	156	78	85.7	34.1	M20	**NAP214**		NA214
75	2 15/16	3 1/4	10 13/16	2 29/32	8 17/32	31/32	1 3/16	1 3/32	6 3/8	3 5/32	3.626	1.469	3/4	**NAP215-47**	P215	NA215-47
		82.6	275	74	217	25	30	28	162	80	92.1	37.3	M20	**NAP215**		NA215

Remarks 1. In Part No. of unit, fitting codes follow bore diameter numbers. (See **Table 10.5** in P.51.)
2. Part No. of applicable grease nipples are shown below.
A-1/4-28UNF ..... 201~210
A-PT1/8 ..... 211~215

Variations of tolerance of distance from mounting bottom to center of spherical bore (Δ_{Hs})

Unit : mm

Housing No.	Δ_{Hs}
P203~P210	±0.15
P211~P215	±0.2

	Basic Load Ratings kN		Factor	Mass
	C_r	C_{0r}	f_0	kg
	12.8	6.65	13.2	0.71 0.69 0.66
	12.8	6.65	13.2	0.73
	14.0	7.85	13.9	0.87
	19.5	11.3	13.9	1.4
	25.7	15.4	13.9	1.8
	29.1	17.8	14.0	2.1
	34.1	21.3	14.0	2.4
	35.1	23.3	14.4	3.1
	43.4	29.4	14.4	3.9
	52.4	36.2	14.4	5.2
	57.2	40.1	14.4	6.5
	62.2	44.1	14.5	7.7
	67.4	48.3	14.5	7.9

3. As for the triple-lip seal type product (from 201 to 205 are the double-lip seal type products), supplementary code L3 (or L2) follows the Part No. of unit or bearing. (Example of Part No. : NAP206JL3, NA206L3)
4. For the dimensions and forms of applicable bearings, see the dimensional tables of ball bearing for unit.
5. Representative examples of the forms of housing are indicated.

NAPK
Cylindrical bore
(with eccentric locking collar)
d 12 ~ 75 mm

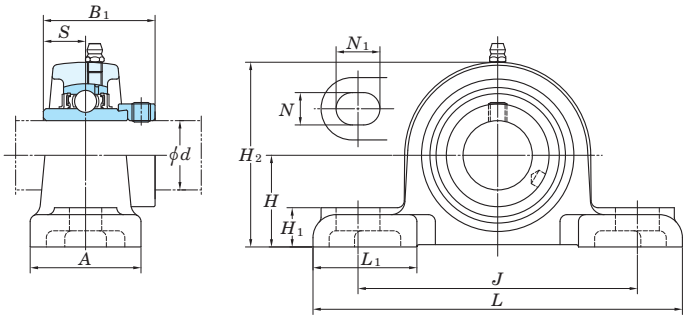

Shaft Dia mm	Shaft Dia inch	Dimensions inch / mm H	L	A	J	N	N_1	H_1	H_2	L_1	B_1	S	Bolt Size inch	Unit No.	Housing No.	Bearing No.
12														NAPK201		NA201
	1/2													NAPK201-8		NA201-8
15														NAPK202		NA202
	5/8	1 1/4	5 1/4	1 5/8	3 27/32	7/16	9/16	9/16	2 15/32	1 25/32	1.72	0.673	3/8	NAPK202-10	PK204	NA202-10
		31.8	133	41	98	11	14	14	63	45	43.7	17.1				
17														NAPK203		NA203
	3/4													NAPK204-12		NA204-12
20														NAPK204		NA204
	7/8													NAPK205-14		NA205-14
25	15/16	1 5/16	5 1/2	1 23/32	4 1/8	7/16	9/16	5/8	2 11/16	1 25/32	1.748	0.689	3/8	NAPK205-15	PK205	NA205-15
		33.3	140	44	105	11	14	16	68	45	44.4	17.5		NAPK205		NA205
	1													NAPK205-16		NA205-16
	1 1/8													NAPK206-18		NA206-18
30		1 9/16	6 5/16	1 7/8	4 3/4	9/16	3/4	21/32	3 5/32	1 25/32	1.906	0.72	1/2	NAPK206	PK206	NA206
	1 3/16	39.7	160	48	121	14	19	17	80	45	48.4	18.3		NAPK206-19		NA206-19
	1 1/4													NAPK206-20		NA206-20
	1 1/4													NAPK207-20		NA207-20
	1 5/16													NAPK207-21		NA207-21
35	1 3/8	1 13/16	6 9/16	1 7/8	5	9/16	3/4	3/4	3 5/8	1 25/32	2.012	0.74	1/2	NAPK207-22	PK207	NA207-22
		46	167	48	127	14	19	19	92	45	51.1	18.8		NAPK207		NA207
	1 7/16													NAPK207-23		NA207-23
	1 1/2													NAPK208-24		NA208-24
40	1 9/16	1 15/16	7 1/8	2 1/8	5 1/2	9/16	3/4	3/4	3 15/16	1 31/32	2.217	0.843	1/2	NAPK208-25	PK208	NA208-25
		49.2	181	54	140	14	19	19	100	50	56.3	21.4		NAPK208		NA208
	1 5/8													NAPK209-26		NA209-26
45	1 11/16	2 1/16	7 15/32	2 1/8	5 3/4	9/16	3/4	25/32	4 3/16	2 1/16	2.217	0.843	1/2	NAPK209-27	PK209	NA209-27
	1 3/4	52.4	190	54	146	14	19	20	106	52	56.3	21.4		NAPK209-28		NA209-28
														NAPK209		NA209
	1 7/8													NAPK210-30		NA210-30
50	1 15/16	2 3/16	8	2 1/4	6 1/4	9/16	3/4	7/8	4 13/32	25/32	2.469	0.969	1/2	NAPK210-31	PK210	NA210-31
		55.6	203	57	159	14	19	22	112	55	62.7	24.6		NAPK210		NA210
	2													NAPK210-32		NA210-32
	2													NAPK211-32		NA211-32
55	2 1/8	2 7/16	9 1/8	2 3/8	7 1/8	23/32	15/16	31/32	4 7/8	2 19/32	2.811	1.094	5/8	NAPK211-34	PK211	NA211-34
		61.9	232	60	181	18	24	25	124	66	71.4	27.8		NAPK211		NA211
	2 3/16													NAPK211-35		NA211-35
	2 1/4													NAPK212-36		NA212-36
60		2 11/16	9 1/2	2 17/32	7 17/32	23/32	15/16	13/32	5 11/32	2 9/16	3.063	1.22	5/8	NAPK212	PK212	NA212
	2 3/8	68.3	241	64	191	18	24	28	136	65	77.8	31		NAPK212-38		NA212-38
	2 7/16													NAPK212-39		NA212-39
75	2 15/16	3 5/16	11 31/32	3 7/32	9 1/2	7/8	1/4	1 1/2	6 1/2	3 7/16	3.626	1.469	3/4	NAPK215-47	PK215	NA215-47
		84.1	304	82	241	22	32	38	165	87	92.1	37.3		NAPK215		NA215

Remarks 1. In Part No. of unit and units with covers, fitting codes follow bore diameter numbers. (See **Table 10.5** in P.51.)
2. Part No. of applicable grease nipples are shown below.
A-1/4-28UNF ..... 201~210
A-PT1/8 ..... 211~215

Variations of tolerance of distance from mounting bottom to center of spherical bore (Δ_{Hs})

Unit : mm

Housing No.	Δ_{Hs}
PK204~PK210	±0.15
PK211~PK215	±0.2

Basic Load Ratings kN		Factor	Mass
C_r	C_{0r}	f_0	kg
12.8	6.65	13.2	0.82
14.0	7.85	13.9	1
19.5	11.3	13.9	1.4
25.7	15.4	13.9	2
29.1	17.8	14.0	2.5
34.1	21.3	14.0	2.7
35.1	23.3	14.4	3.2
43.4	29.4	14.4	4.6
52.4	36.2	14.4	5.2
67.4	48.3	14.5	9.6

3. For the dimensions and forms of applicable bearings, see the dimensional tables of ball bearing for unit.
4. Representative examples of the forms of housing are indicated.

UKP
Tapered bore (with adapter)
d_1 20 ~ (50) mm

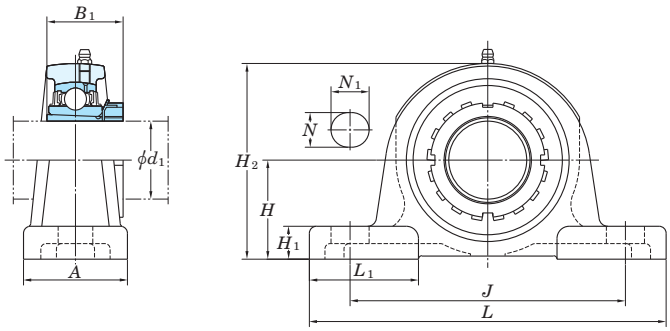

Shaft Dia. mm	Shaft Dia. inch	Dimensions inch / mm										Bolt Size inch / mm	Standard Unit No.	Housing No.	Bearing No.
d_1		H	L	A	J	N	N_1	H_1	H_2	L_1	B_1 1)				
20	3/4	1 7/16 36.5	5 1/2 140	1 1/2 38	4 1/8 105	1/2 13	23/32 18	1/2 13	2 25/32 71	1 11/16 43	1 5/32(1 3/8) 29(35)	3/8 M10	UKP205	P205	UK205
	3/4	1 3/4 44.4	6 1/4 159	2 51	4 11/16 119	21/32 17	31/32 25	5/8 16	3 3/8 86	1 27/32 47	1 3/8 35	1/2 M14	UKPX05	PX05	UKX05
	3/4	1 49/64 45	6 7/8 175	1 3/4 45	5 3/16 132	21/32 17	25/32 20	5/8 16	3 11/32 85	2 5/32 55	1 3/8 35	1/2 M14	UKP305	P305	UK305
25	1	1 11/16 42.9	6 1/2 165	1 7/8 48	4 3/4 121	21/32 17	13/16 21	19/32 15	3 5/16 84	2 3/32 53	1 7/32(1 1/2) 31(38)	1/2 M14	UKP206	P206	UK206
	1	1 7/8 47.6	6 7/8 175	2 1/4 57	5 127	21/32 17	31/32 25	21/32 17	3 21/32 93	2 5/32 55	1 1/2 38	1/2 M14	UKPX06	PX06	UKX06
	1	1 31/32 50	7 3/32 180	1 31/32 50	5 1/2 140	21/32 17	25/32 20	21/32 17	3 3/4 95	2 3/32 53	1 1/2 38	1/2 M14	UKP306	P306	UK306
30	1 1/8	1 7/8 47.6	6 9/16 167	1 7/8 48	5 127	21/32 17	13/16 21	5/8 16	3 21/32 93	2 51	1 3/8(1 11/16) 35(43)	1/2 M14	UKP207	P207	UK207
	1 1/8	2 1/8 54	8 203	2 1/4 57	5 11/16 144	21/32 17	1 3/16 30	3/4 19	4 1/8 105	2 17/32 64	1 11/16 43	1/2 M14	UKPX07	PX07	UKX07
	1 1/8	2 13/64 56	8 9/32 210	2 7/32 56	6 5/16 160	21/32 17	31/32 25	3/4 19	4 7/32 107	2 9/16 65	1 11/16 43	1/2 M14	UKP307	P307	UK307
35	1 1/4 1 3/8	1 15/16 49.2	7 1/4 184	2 1/8 54	5 13/32 137	21/32 17	13/16 21	21/32 17	3 27/32 98	2 1/4 57	1 13/32(1 13/16) 36(46)	1/2 M14	UKP208	P208	UK208
	1 1/4 1 3/8	2 5/16 58.7	8 3/4 222	2 5/8 67	6 1/8 156	25/32 20	1 1/4 32	13/16 21	4 1/2 114	2 25/32 71	1 13/16 46	5/8 M16	UKPX08	PX08	UKX08
	1 1/4 1 3/8	2 23/64 60	8 21/32 220	2 3/8 60	6 11/16 170	21/32 17	1 1/16 27	3/4 19	4 21/32 118	2 9/16 65	1 13/16 46	1/2 M14	UKP308	P308	UK308
40	1 1/2 1 5/8	2 1/8 54	7 15/32 190	2 1/8 54	5 3/4 146	21/32 17	13/16 21	21/32 17	4 3/16 106	2 3/8 60	1 17/32(1 31/32) 39(50)	1/2 M14	UKP209	P209	UK209
	1 1/2 1 5/8	2 5/16 58.7	8 3/4 222	2 5/8 67	6 1/8 156	25/32 20	1 5/16 33	13/16 21	4 9/16 116	2 25/32 71	1 31/32 50	5/8 M16	UKPX09	PX09	UKX09
	1 1/2 1 5/8	2 41/64 67	9 21/32 245	2 5/8 67	7 15/32 190	25/32 20	1 3/16 30	13/16 21	5 3/16 132	2 15/16 75	1 31/32 50	5/8 M16	UKP309	P309	UK309
45	1 3/4	2 1/4 57.2	8 1/8 206	2 3/8 60	6 1/4 159	25/32 20	7/8 22	3/4 19	4 7/16 113	2 15/32 63	1 21/32(2 5/32) 42(55)	5/8 M16	UKP210	P210	UK210
	1 3/4	2 1/2 63.5	9 1/2 241	2 7/8 73	6 23/32 171	25/32 20	1 13/32 36	7/8 22	4 31/32 126	3 76	2 5/32 55	5/8 M16	UKPX10	PX10	UKX10
	1 3/4	2 61/64 75	10 13/16 275	2 15/16 75	8 11/32 212	25/32 20	1 3/8 35	15/16 24	5 13/16 148	3 15/32 88	2 5/32 55	5/8 M16	UKP310	P310	UK310
50	1 7/8 2	2 1/2 63.5	8 5/8 219	2 3/8 60	6 23/32 171	25/32 20	7/8 22	3/4 19	4 29/32 125	2 3/4 70	1 25/32(2 5/16) 45(59)	5/8 M16	UKP211	P211	UK211

Note 1) Codes shown in parentheses indicate the dimensions and Part No. of applicable adapter (H2300X series) for UK200L3 series (triple-lip seal type).

Remarks 1. In Part No. of unit and units with covers, fitting codes follow bore diameter numbers. (See **Table 10.5** in P.51.)

2. Part No. of applicable grease nipples are shown below.
A-1/4-28UNF.....205~210, X05~X09, 305~308
A-PT1/8.....211~218, X10~X20, 309~328

With Pressed Steel Covers

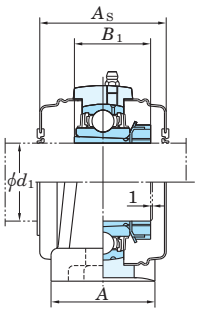

With Cast Iron Covers

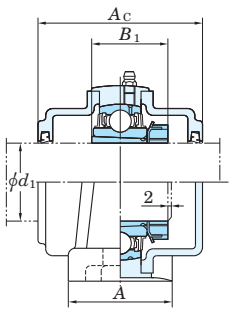

Variations of tolerance of distance from mounting bottom to center of spherical bore (Δ_{Hs})

Unit : mm

Housing No.			Δ_{Hs}
P205~P210	PX05~PX10	P305~P310	±0.15
P211~P218	PX11~PX18	P311~P318	±0.2
	PX20	P319~P328	±0.3

Forms and dimensions of H_{2c} of P205JE3 (housing with cast iron covers) are shown below.

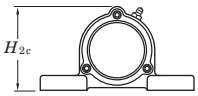

P205JE3 H_{2c} = 77 mm

Adapter[1)] assembly No.	Mass	Basic Load Ratings kN		Factor	With Pressed Steel Covers					With Cast Iron Covers				
					Unit No.		Dimension mm	inch	Mass	Unit No.		Dimension mm	inch	Mass
	kg	C_r	C_{0r}	f_0	Open Ends Type	Closed End Type	A_s		kg	Open Ends Type	Closed End Type	A_c		kg
HE305X(HE2305X)	0.84	14.0	7.85	13.9	–	–	–	–	–	–	–	–	–	–
H305X(H2305X)	0.84				UKP205C	UKP205CD	48	1 7/8	0.84	UKP205FC	UKP205FCD	66	2 19/32	1.3
HE2305X	1.5	19.5	11.3	13.9	–	–	–	–	–	–	–	–	–	–
H2305X	1.5				UKPX05C	UKPX05CD	52	2 1/16	1.5	–	–	–	–	–
HE2305X	1.7	21.2	10.9	12.6	–	–	–	–	–	–	–	–	–	–
H2305X	1.7				–	–	–	–	–	UKP305C	UKP305CD	76	3	2.3
H306X(H2306X)	1.4	19.5	11.3	13.9	UKP206C	UKP206CD	52	2 1/16	1.4	UKP206FC	UKP206FCD	70	2 3/4	1.9
HE306X(HE2306X)	1.4				–	–	–	–	–	–	–	–	–	–
H2306X	2.1	25.7	15.4	13.9	UKPX06C	UKPX06CD	59	2 5/16	2.1	–	–	–	–	–
HE2306X	2.1				–	–	–	–	–	–	–	–	–	–
H2306X	2.3	26.7	15.0	13.3	–	–	–	–	–	UKP306C	UKP306CD	82	3 7/32	2.9
HE2306X	2.3				–	–	–	–	–	–	–	–	–	–
HS307X(HS2307X)	1.7	25.7	15.4	13.9	–	–	–	–	–	–	–	–	–	–
H307X(H2307X)	1.7				UKP207C	UKP207CD	59	2 5/16	1.7	UKP207FC	UKP207FCD	78	3 1/16	2.5
HS2307X	2.7	29.1	17.8	14.0	–	–	–	–	–	–	–	–	–	–
H2307X	2.7				UKPX07C	UKPX07CD	68	2 11/16	2.7	–	–	–		–
HS2307X	3.0	33.4	19.3	13.2	–	–	–	–	–	–	–	–	–	–
H2307X	3.0				–	–	–	–	–	UKP307C	UKP307CD	88	3 15/32	3.9
HE308X(HE2308X)	2.0	29.1	17.8	14.0	–	–	–	–	–	–	–	–	–	–
HS308X(HS2308X)	2.0				–	–	–	–	–	–	–	–	–	–
H308X(H2308X)	2.0				UKP208C	UKP208CD	68	2 11/16	2.0	UKP208FC	UKP208FCD	86	3 3/8	2.9
HE2308X	3.5	34.1	21.3	14.0	–	–	–	–	–	–	–	–	–	–
HS2308X	3.5				–	–	–	–	–	–	–	–	–	–
H2308X	3.5				UKPX08C	UKPX08CD	68	2 11/16	3.5	–	–	–	–	–
HE2308X	3.8	40.7	24.0	13.2	–	–	–	–	–	–	–	–	–	–
HS2308X	3.8				–	–	–	–	–	–	–	–	–	–
H2308X	3.8				–	–	–	–	–	UKP308C	UKP308CD	96	3 25/32	5.2
HE309X(HE2309X)	2.3	34.1	21.3	14.0	–	–	–	–	–	–	–	–	–	–
H309X(H2309X)	2.3				UKP209C	UKP209CD	68	2 11/16	2.3	UKP209FC	UKP209FCD	88	3 15/32	3.2
HS309X(HS2309X)	2.3				–	–	–	–	–	–	–	–	–	–
HE2309X	3.7	35.1	23.3	14.4	–	–	–	–	–	–	–	–	–	–
H2309X	3.7				UKPX09C	UKPX09CD	73	2 7/8	3.7	–	–	–	–	–
HS2309X	3.7				–	–	–	–	–	–	–	–	–	–
HE2309X	5.0	48.9	29.5	13.3	–	–	–	–	–	–	–	–	–	–
H2309X	5.0				–	–	–	–	–	UKP309C	UKP309CD	102	4 1/32	6.3
HS2309X	5.0				–	–	–	–	–	–	–	–	–	–
HE310X(HE2310X)	3.0	35.1	23.3	14.4	–	–	–	–	–	–	–	–		–
H310X(H2310X)	3.0				UKP210C	UKP210CD	73	2 7/8	3.0	UKP210FC	UKP210FCD	97	3 13/16	4.1
HE2310X	4.6	43.4	29.4	14.4	–	–	–	–	–	–	–	–	–	–
H2310X	4.6				UKPX10C	UKPX10CD	75	2 15/16	4.6	–	–	–	–	–
HE2310X	6.7	62.0	38.3	13.2	–	–	–	–	–	–	–	–	–	–
H2310X	6.7				–	–	–	–	–	UKP310C	UKP310CD	110	4 11/32	8.4
HS311X(HS2311X)	3.7	43.4	29.4	14.4	–	–	–	–	–	–	–	–	–	–
H311X(H2311X)	3.7				UKP211C	UKP211CD	75	2 15/16	3.7	UKP211FC	UKP211FCD	99	3 29/32	5.0
HE311X(HE2311X)	3.7				–	–	–	–	–	–	–	–	–	–

3. In Part No. of unit with adapters and bearing with adapters, Part No. of applicable adapter follow the Part No. shown in the dimensional tables. (Example of Part No. : UKP206J + H306X, UK206 + H306X)
4. As for the triple-lip seal type product (205 is the double-lip seal type product), supplementary code L3 (or L2) follows the Part No. of unit or bearing.
5. For the dimensions and forms of applicable bearings and adapters, see the dimensional tables of ball bearing for unit and adapter assemblies.
6. Representative examples of the forms of housing are indicated.

UKP
Tapered bore (with adapter)
d_1 (50) ~ 85 mm

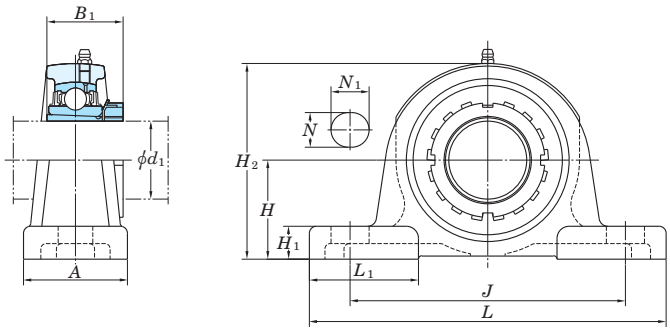

Shaft Dia. mm	Shaft Dia. inch	Dimensions inch / mm										Bolt Size inch / mm	Standard Unit No.	Standard Housing No.	Standard Bearing No.
d_1		H	L	A	J	N	N_1	H_1	H_2	L_1	B_1 1)				
50	1 7/8	2 3/4	10 1/4	3 1/8	7 1/4	31/32	1 13/32	1 3/32	5 15/32	3 9/32	2 5/16	3/4	UKPX11	PX11	UKX11
	2	69.8	260	79	184	25	36	28	139	83	59	M20			
	1 7/8	3 5/32	12 7/32	3 5/32	9 9/32	25/32	1 1/2	1 1/16	6 7/32	3 17/32	2 5/16	5/8	UKP311	P311	UK311
	2	80	310	80	236	20	38	27	158	90	59	M16			
55	2 1/8	2 3/4	9 1/2	2 3/4	7 1/4	25/32	31/32	7/8	5 7/16	3	1 27/32(2 7/16)	5/8	UKP212	P212	UK212
		69.8	241	70	184	20	25	22	138	76	47(62)	M16			
	2 1/8	3	11 1/4	3 1/4	8	31/32	1 9/16	1 3/32	5 31/32	3 15/32	2 7/16	3/4	UKPX12	PX12	UKX12
		76.2	286	83	203	25	40	28	152	88	62	M20			
	2 1/8	3 11/32	13	3 11/32	9 27/32	31/32	1 1/2	1 5/32	6 9/16	4 1/16	2 7/16	3/4	UKP312	P312	UK312
		85	330	85	250	25	38	29	167	103	62	M20			
60	2 1/4	3	10 7/16	2 3/4	8	31/32	1 3/16	31/32	5 29/32	3 1/16	1 31/32(2 9/16)	3/4	UKP213	P213	UK213
	2 3/8	76.2	265	70	203	25	30	25	150	78	50(65)	M20			
	2 1/4	3	11 1/4	3 1/4	8	31/32	1 9/16	1 3/32	6 3/32	3 15/32	2 9/16	3/4	UKPX13	PX13	UKX13
	2 3/8	76.2	286	83	203	25	40	28	155	88	65	M20			
	2 1/4	3 35/64	13 3/8	3 17/32	10 1/4	31/32	1 1/2	1 1/4	6 15/16	4 11/32	2 9/16	3/4	UKP313	P313	UK313
	2 3/8	90	340	90	260	25	38	32	176	110	65	M20			
65	2 1/2	3 1/4	10 13/16	2 29/32	8 17/32	31/32	1 3/16	1 3/32	6 3/8	3 5/32	2 5/32(2 7/8)	3/4	UKP215	P215	UK215
		82.6	275	74	217	25	30	28	162	80	55(73)	M20			
	2 1/2	3 1/2	13	3 1/2	9	1 1/16	1 31/32	1 1/4	6 7/8	3 29/32	2 7/8	7/8	UKPX15	PX15	UKX15
		88.9	330	89	229	27	50	32	175	99	73	M22			
	2 1/2	3 15/16	14 31/32	3 15/16	11 13/32	1 1/16	1 9/16	1 3/8	7 25/32	4 7/32	2 7/8	7/8	UKP315	P315	UK315
		100	380	100	290	27	40	35	198	107	73	M22			
70	2 3/4	3 1/2	11 1/2	3 1/16	9 1/8	31/32	1 3/8	1 1/4	6 27/32	3 3/8	2 5/16(3 1/16)	3/4	UKP216	P216	UK216
		88.9	292	78	232	25	35	32	174	86	59(78)	M20			
	2 3/4	4	15	4	11 1/8	1 1/16	2 9/32	1 11/32	7 11/16	4 9/16	3 1/16	7/8	UKPX16	PX16	UKX16
		101.6	381	102	283	27	58	34	195	116	78	M22			
	2 3/4	4 11/64	15 3/4	4 11/32	11 13/16	1 1/16	1 9/16	1 3/8	8 7/32	4 23/32	3 1/16	7/8	UKP316	P316	UK316
		106	400	110	300	27	40	35	209	120	78	M22			
75	3	3 3/4	12 7/32	3 9/32	9 23/32	31/32	1 9/16	1 1/4	7 9/32	3 17/32	2 15/32(3 7/32)	3/4	UKP217	P217	UK217
		95.2	310	83	247	25	40	32	185	90	63(82)	M20			
	3	4	15	4	11 1/8	1 1/16	2 3/8	1 11/32	7 7/8	4 9/16	3 7/32	7/8	UKPX17	PX17	UKX17
		101.6	381	102	283	27	60	34	200	116	82	M22			
	3	4 13/32	16 17/32	4 11/32	12 19/32	1 5/16	1 25/32	1 9/16	8 21/32	4 23/32	3 7/32	1	UKP317	P317	UK317
		112	420	110	320	33	45	40	220	120	82	M27			
80	–	4	12 7/8	3 15/32	10 5/16	1 1/16	1 25/32	1 11/32	7 25/32	4 3/32	2 9/16(3 3/8)	7/8	UKP218	P218	UK218
		101.6	327	88	262	27	45	34	198	104	65(86)	M22			
	–	4	15	4 3/8	11 1/8	1 1/16	2 3/8	1 1/2	8 1/32	4 9/16	3 3/8	7/8	UKPX18	PX18	UKX18
		101.6	381	111	283	27	60	38	204	116	86	M22			
	–	4 41/64	16 15/16	4 11/32	13	1 5/16	1 25/32	1 9/16	9 7/32	4 23/32	3 3/8	1	UKP318	P318	UK318
		118	430	110	330	33	45	40	234	120	86	M27			
85	3 1/4	4 59/64	18 1/2	4 23/32	14 3/16	1 13/32	1 31/32	1 13/16	9 3/4	4 29/32	3 17/32	1 1/8	UKP319	P319	UK319
		125	470	120	360	36	50	46	248	125	90	M30			

Note 1) Codes shown in parentheses indicate the dimensions and Part No. of applicable adapter (H2300X series) for UK200L3 series (triple-lip seal type).

Remarks 1. In Part No. of unit and units with covers, fitting codes follow bore diameter numbers. (See **Table 10.5** in P.51.)

2. Part No. of applicable grease nipples are shown below.
A-1/4-28UNF.....205~210, X05~X09, 305~308
A-PT1/8.....211~218, X10~X20, 309~328

With Pressed Steel Covers

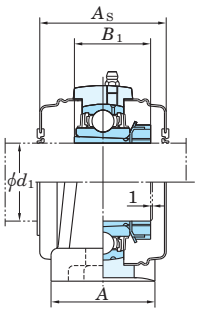

With Cast Iron Covers

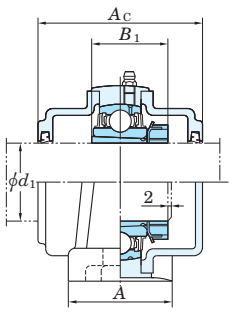

Variations of tolerance of distance from mounting bottom to center of spherical bore (Δ_{Hs})

Unit : mm

Housing No.			Δ_{Hs}
P205~P210	PX05~PX10	P305~P310	±0.15
P211~P218	PX11~PX18	P311~P318	±0.2
	PX20	P319~P328	±0.3

Forms and dimensions of H_{2c} of P205JE3 (housing with cast iron covers) are shown below.

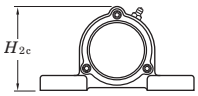

P205JE3 H_{2c} = 77 mm

Adapter[1] assembly No.	Mass	Basic Load Ratings kN		Factor	With Pressed Steel Covers					With Cast Iron Covers				
					Unit No.		Dimension mm	inch	Mass	Unit No.		Dimension mm	inch	Mass
	kg	C_r	C_{0r}	f_0	Open Ends Type	Closed End Type	A_s		kg	Open Ends Type	Closed End Type	A_c		kg
HS2311X	6.2				–	–	–	–	–	–	–	–	–	–
H2311X	6.2	52.4	36.2	14.4	UKPX11C	UKPX11CD	88	3 15/32	6.2	–	–	–	–	–
HE2311X	6.2				–	–	–	–	–	–	–	–	–	–
HS2311X	8.1				–	–	–	–	–	–	–	–	–	–
H2311X	8.1	71.6	45.0	13.2	–	–	–	–	–	UKP311C	UKP311CD	114	4 1/2	10.0
HE2311X	8.1				–	–	–	–	–	–	–	–	–	–
HS312X(HS2312X)	4.8	52.4	36.2	14.4	–	–	–	–	–	–	–	–	–	–
H312X(H2313X)	4.8				UKP212C	UKP212CD	88	3 15/32	4.8	UKP212FC	UKP212FCD	114	4 1/2	6.3
HS2312X	7.5	57.2	40.1	14.4	–	–	–	–	–	–	–	–	–	–
H2312X	7.5				UKPX12C	UKPX12CD	88	3 15/32	7.5	–	–	–	–	–
HS2312X	9.4	81.9	52.2	13.2	–	–	–	–	–	–	–	–	–	–
H2312X	9.4				–	–	–	–	–	UKP312C	UKP312CD	124	4 7/8	11.8
HE313X(HE2313X)	5.8				–	–	–	–	–	–	–	–	–	–
H313X(H2313X)	5.8	57.2	40.1	14.4	UKP213C	UKP213CD	88	3 15/32	5.8	UKP213FC	UKP213FCD	114	4 1/2	7.5
HS313X(HS2313X)	5.8				–	–	–	–	–	–	–	–	–	–
HE2313X	7.8				–	–	–	–	–	–	–	–	–	–
H2313X	7.8	62.2	44.1	14.5	UKPX13C	UKPX13CD	98	3 27/32	7.8	–	–	–	–	–
HS2313X	7.8				–	–	–	–	–	–	–	–	–	–
HE2313X	10.8				–	–	–	–	–	–	–	–	–	–
H2313X	10.8	92.7	59.9	13.2	–	–	–	–	–	UKP313C	UKP313CD	122	4 13/16	13.2
HS2313X	10.8				–	–	–	–	–	–	–	–	–	–
HE315X(HE2315X)	7.5	67.4	48.3	14.5	–	–	–	–	–	–	–	–	–	–
H315X(H2315X)	7.5				UKP215C	UKP215CD	98	3 27/32	7.5	UKP215FC	UKP215FCD	124	4 7/8	9.5
HE2315X	10.5	72.7	53.0	14.6	–	–	–	–	–	–	–	–	–	–
H2315X	10.5				UKPX15C	UKPX15CD	108	4 1/4	10.5	–	–	–	–	–
HE2315X	14.9	113	77.2	13.2	–	–	–	–	–	–	–	–	–	–
H2315X	14.9				–	–	–	–	–	UKP315C	UKP315CD	134	5 9/32	17.7
HE316X(HE2316X)	9.2	72.7	53.0	14.6	–	–	–	–	–	–	–	–	–	–
H316X(H2316X)	9.2				UKP216C	UKP216CD	108	4 1/4	9.2	UKP216FC	UKP216FCD	138	5 7/16	11.7
HE2316X	15.4	84.0	61.9	14.5	–	–	–	–	–	–	–	–	–	–
H2316X	15.4				UKPX16C	UKPX16CD	112	4 13/32	15.4	–	–	–	–	–
HE2316X	18.6	123	86.7	13.3	–	–	–	–	–	–	–	–	–	–
H2316X	18.6				–	–	–	–	–	UKP316C	UKP316CD	138	5 7/16	21.7
H317X(H2317X)	11.0	84.0	61.9	14.5	UKP217C	UKP217CD	112	4 13/32	11.0	UKP217FC	UKP217FCD	142	5 19/32	13.8
HE317X(HE2317X)	11.0				–	–	–	–	–	–	–	–	–	–
H2317X	15.8	96.1	71.5	14.5	UKPX17C	UKPX17CD	122	4 13/16	15.8	–	–	–	–	–
HE2317X	15.8				–	–	–	–	–	–	–	–	–	–
H2317X	20.2	133	96.8	13.3	–	–	–	–	–	UKP317C	UKP317CD	146	5 3/4	23.7
HE2317X	20.2				–	–	–	–	–	–	–	–	–	–
H318X(H2318X)	13.8	96.1	71.5	14.5	UKP218C	UKP218CD	122	4 13/16	13.8	UKP218FC	UKP218FCD	152	6	18.8
H2318X	18.6	109	81.9	14.4	–	–	–	–	–	UKPX18C	UKPX18CD	158	6 7/32	22.4
H2318X	22.8	143	107	13.3	–	–	–	–	–	UKP318C	UKP318CD	150	5 29/32	27.0
HE2319X	29.3	153	119	13.3	–	–	–	–	–	–	–	–	–	–
H2319X	29.3				–	–	–	–	–	UKP319C	UKP319CD	162	6 3/8	34.0

3. In Part No. of unit with adapters and bearing with adapters, Part No. of applicable adapter follow the Part No. shown in the dimensional tables. (Example of Part No. : UKP206J + H306X, UK206 + H306X)
4. As for the triple-lip seal type product (205 is the double-lip seal type product), supplementary code L3 (or L2) follows the Part No. of unit or bearing.
5. For the dimensions and forms of applicable bearings and adapters, see the dimensional tables of ball bearing for unit and adapter assemblies.
6. Representative examples of the forms of housing are indicated.

UKP
Tapered bore (with adapter)
d_1 90 ~ 125 mm

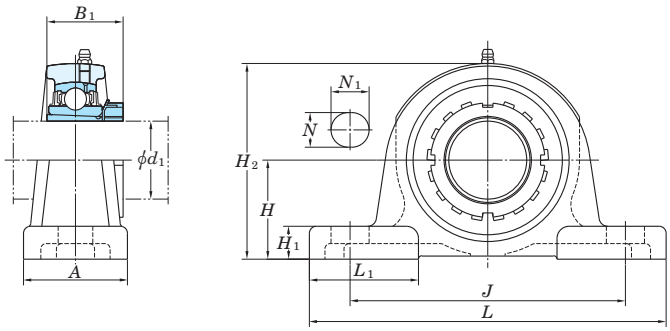

Shaft Dia. mm	Shaft Dia. inch	Dimensions inch / mm										Bolt Size inch / mm	Standard Unit No.	Housing No.	Bearing No.
d_1		H	L	A	J	N	N_1	H_1	H_2	L_1	B_1 1)				
90	3 1/2	5	17	4 3/4	13 1/4	1 5/16	2 9/16	1 25/32	9 21/32	4 31/32	3 13/16	1	UKPX20	PX20	UKX20
		127	432	121	337	33	65	45	245	126	97	M27			
	3 1/2	5 33/64	19 9/32	4 23/32	14 31/32	1 13/32	1 31/32	1 13/16	10 3/4	5 1/2	3 13/16	1 1/8	UKP320	P320	UK320
		140	490	120	380	36	50	46	273	140	97	M30			
100		5 29/32	20 15/32	5 1/2	15 3/4	1 9/16	2 5/32	1 31/32	11 21/32	5 29/32	4 1/8	1 1/4	UKP322	P322	UK322
	4	150	520	140	400	40	55	50	296	150	105	M33			
110	–	6 19/64	22 7/16	5 1/2	17 23/32	1 9/16	2 5/32	1 31/32	12 7/16	6 5/16	4 13/32	1 1/4	UKP324	P324	UK324
		160	570	140	450	40	55	50	316	160	112	M33			
115	4 1/2	7 3/32	23 5/8	5 1/2	18 29/32	1 9/16	2 5/32	1 31/32	13 21/32	7 11/16	4 3/4	1 1/4	UKP326	P326	UK326
		180	600	140	480	40	55	50	355	195	121	M33			
125	–	7 7/8	24 13/32	5 1/2	19 11/16	1 9/16	2 5/32	2 3/8	15 15/32	7 9/32	5 5/32	1 1/4	UKP328	P328	UK328
		200	620	140	500	40	55	60	393	185	131	M33			

Note 1) Codes shown in parentheses indicate the dimensions and Part No. of applicable adapter (H2300X series) for UK200L3 series (triple-lip seal type).

Remarks 1. In Part No. of unit and units with covers, fitting codes follow bore diameter numbers. (See **Table 10.5** in P.51.)

2. Part No. of applicable grease nipples are shown below.
A-1/4-28UNF.....205~210, X05~X09, 305~308
A-PT1/8.....211~218, X10~X20, 309~328

With Pressed Steel Covers

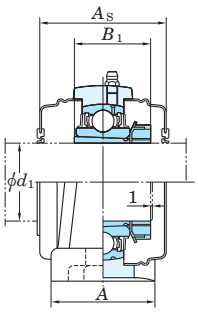

With Cast Iron Covers

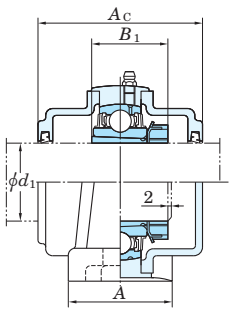

Variations of tolerance of distance from mounting bottom to center of spherical bore (Δ_{Hs})

Unit : mm

Housing No.			Δ_{Hs}
P205~P210	PX05~PX10	P305~P310	±0.15
P211~P218	PX11~PX18	P311~P318	±0.2
	PX20	P319~P328	±0.3

Forms and dimensions of H_{2c} of P205JE3 (housing with cast iron covers) are shown below.

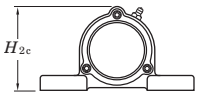

P205JE3 H_{2c} = 77 mm

Adapter[1)] assembly No.	Mass kg	Basic Load Ratings kN C_r	C_{0r}	Factor f_0	With Pressed Steel Covers Unit No. Open Ends Type	Closed End Type	Dimension mm A_s	inch	Mass kg	With Cast Iron Covers Unit No. Open Ends Type	Closed End Type	Dimension mm A_c	inch	Mass kg
HE2320X	29.3	133	105	14.4	–	–	–	–	–	–	–	–	–	–
H2320X	29.3				–	–	–	–	–	UKPX20C	UKPX20CD	186	7 5/16	34.3
HE2320X	34.8	173	141	13.2	–	–	–	–	–	–	–	–	–	–
H2320X	34.8				–	–	–	–	–	UKP320C	UKP320CD	174	6 27/32	41.0
H2322X	43.9	205	180	13.2	–	–	–	–	–	UKP322C	UKP322CD	188	7 13/32	50.8
HE2322X	43.9				–	–	–	–	–	–	–	–	–	–
H2324	55.7	207	185	13.5	–	–	–	–	–	UKP324C	UKP324CD	196	7 23/32	66.0
HE2326	71.9	229	214	13.6	–	–	–	–	–	–	–	–	–	–
H2326	71.9				–	–	–	–	–	UKP326C	UKP326CD	214	8 7/16	85.2
H2328	92.5	253	246	13.6	–	–	–	–	–	UKP328C	UKP328CD	222	8 3/4	109

3. In Part No. of unit with adapters and bearing with adapters, Part No. of applicable adapter follow the Part No. shown in the dimensional tables. (Example of Part No. : UKP206J + H306X, UK206 + H306X)
4. As for the triple-lip seal type product (205 is the double-lip seal type product), supplementary code L3 (or L2) follows the Part No. of unit or bearing.
5. For the dimensions and forms of applicable bearings and adapters, see the dimensional tables of ball bearing for unit and adapter assemblies.
6. Representative examples of the forms of housing are indicated.

UCP-SC
Cylindrical bore (with set screws), cast steel housing
d 25 ~ 70 mm

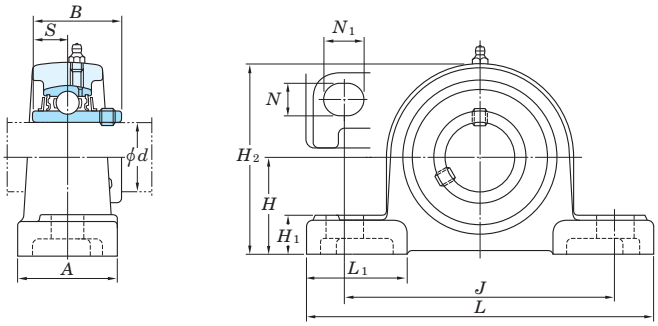

Shaft Dia. mm	Shaft Dia. inch	Dimensions inch / mm H	L	A	J	N	N1	H1	H2	L1	B	S	Bolt Size inch / mm	Standard Unit No.	Housing No.	Bearing No.
25	7/8	1 7/16	5 1/2	1 1/2	4 1/8	1/2	23/32	5/8	2 25/32	1 11/16	1.343	0.563	3/8	**UCP205-14SC**	P205SC	UC205-14
	15/16	36.5	140	38	105	13	18	16	71	43	34.1	14.3	M10	**UCP205-15SC**		UC205-15
														UCP205SC		UC205
	1													**UCP205-16SC**		UC205-16
30	1 1/8	1 11/16	6 1/2	1 7/8	4 3/4	21/32	13/16	23/32	3 3/8	2 3/32	1.500	0.626	1/2	**UCP206-18SC**	P206SC	UC206-18
		42.9	165	48	121	17	21	18	86	53	38.1	15.9	M14	**UCP206SC**		UC206
	1 3/16													**UCP206-19SC**		UC206-19
	1 1/4													**UCP206-20SC**		UC206-20
35	1 1/4	1 7/8	6 9/16	1 7/8	5	21/32	13/16	3/4	3 25/32	2	1.689	0.689	1/2	**UCP207-20SC**	P207SC	UC207-20
	1 5/16	47.6	167	48	127	17	21	19	96	51	42.9	17.5	M14	**UCP207-21SC**		UC207-21
	1 3/8													**UCP207-22SC**		UC207-22
														UCP207SC		UC207
	1 7/16													**UCP207-23SC**		UC207-23
40	1 1/2	1 15/16	7 1/4	2 1/8	5 13/32	21/32	13/16	3/4	3 15/16	2 1/4	1.937	0.748	1/2	**UCP208-24SC**	P208SC	UC208-24
	1 9/16	49.2	184	54	137	17	21	19	100	57	49.2	19	M14	**UCP208-25SC**		UC208-25
														UCP208SC		UC208
45	1 5/8	2 1/8	7 15/32	2 1/8	5 3/4	21/32	13/16	25/32	4 1/4	2 3/8	1.937	0.748	1/2	**UCP209-26SC**	P209SC	UC209-26
	1 11/16	54	190	54	146	17	21	20	108	60	49.2	19	M14	**UCP209-27SC**		UC209-27
	1 3/4													**UCP209-28SC**		UC209-28
														UCP209SC		UC209
50	1 7/8	2 1/4	8 1/8	2 3/8	6 1/4	25/32	7/8	7/8	4 17/32	2 15/32	2.031	0.748	5/8	**UCP210-30SC**	P210SC	UC210-30
	1 15/16	57.2	206	60	159	20	22	22	115	63	51.6	19	M16	**UCP210-31SC**		UC210-31
														UCP210SC		UC210
	2													**UCP210-32SC**		UC210-32
	–	2 61/64	10 13/16	2 15/16	8 11/32	25/32	1 3/8	1 1/16	5 13/16	3 15/32	2.402	0.866	5/8	**UCP310SC**	P310SC	UC310
		75	275	75	212	20	35	27	148	88	61	22	M16			
55	2	2 1/2	8 5/8	2 3/8	6 23/32	25/32	7/8	15/16	5	2 3/4	2.189	0.874	5/8	**UCP211-32SC**	P211SC	UC211-32
	2 1/8	63.5	219	60	171	20	22	24	127	70	55.6	22.2	M16	**UCP211-34SC**		UC211-34
														UCP211SC		UC211
	2 3/16													**UCP211-35SC**		UC211-35
	2	3 5/32	12 7/32	3 5/32	9 9/32	25/32	1 1/2	1 3/16	6 7/32	3 17/32	2.598	0.984	5/8	**UCP311-32SC**	P311SC	UC311-32
		80	310	80	236	20	38	30	158	90	66	25	M16	**UCP311SC**		UC311
60	2 1/4	2 3/4	9 1/2	2 3/4	7 1/4	25/32	31/32	31/32	5 15/32	3	2.563	1.000	5/8	**UCP212-36SC**	P212SC	UC212-36
		69.8	241	70	184	20	25	25	139	76	65.1	25.4	M16	**UCP212SC**		UC212
	2 3/8													**UCP212-38SC**		UC212-38
	2 7/16													**UCP212-39SC**		UC212-39
	–	3 11/32	13	3 11/32	9 27/32	31/32	1 1/2	1 1/4	6 5/8	4 1/16	2.795	1.024	3/4	**UCP312SC**	P312SC	UC312
		85	330	85	250	25	38	32	168	103	71	26	M20			
65	2 1/2	3	10 7/16	2 3/4	8	31/32	1 3/16	1 3/32	5 15/16	3 1/16	2.563	1.000	3/4	**UCP213-40SC**	P213SC	UC213-40
		76.2	265	70	203	25	30	28	151	78	65.1	25.4	M20	**UCP213SC**		UC213
	2 1/2	3 35/64	13 3/8	3 17/32	10 1/4	31/32	1 1/2	1 3/8	7	4 11/32	2.953	1.181	3/4	**UCP313-40SC**	P313SC	UC313-40
		90	340	90	260	25	38	35	178	110	75	30	M20	**UCP313SC**		UC313
70	2 3/4	3 1/8	10 15/32	2 27/32	8 9/32	31/32	1 3/16	1 3/32	6 3/16	3 1/16	2.937	1.189	3/4	**UCP214-44SC**	P214SC	UC214-44
		79.4	266	72	210	25	30	28	157	78	74.6	30.2	M20	**UCP214SC**		UC214
	2 3/4	3 47/64	14 3/16	3 17/32	11 1/32	1 1/16	1 9/16	1 1/2	7 13/32	4 11/32	3.071	1.299	7/8	**UCP314-44SC**	P314SC	UC314-44
		95	360	90	280	27	40	38	188	110	78	33	M22	**UCP314SC**		UC314

Remarks 1. In Part No. of unit and units with covers, fitting codes follow bore diameter numbers. (See **Table 10.5** in P.51.)
2. Part No. of applicable grease nipples are shown below.
A-1/4-28UNF ..... 205~210
A-PT1/8 ..... 211~218, 310~328

With Cast Iron Covers

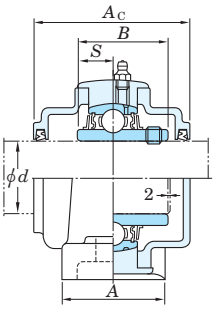

Variations of tolerance of distance from mounting bottom to center of spherical bore (Δ_{Hs})

Unit : mm

Housing No.		Δ_{Hs}
P205SC~P210SC	P310SC	±0.15
P211SC~P218SC	P311SC~P318SC	±0.2
	P319SC~P328SC	±0.3

Mass	Basic Load Ratings kN		Factor	With Cast Iron Covers Unit No.		Dimension mm	inch	Mass
kg	C_r	C_{0r}	f_0	Open Ends Type	Closed End Type	A_c		kg
0.90	14.0	7.85	13.9	–	–	–	–	–
0.90				–	–	–	–	–
0.90				–	–	–	–	–
0.90				–	–	–	–	–
1.5	19.5	11.3	13.9	–	–	–	–	–
1.5				UCP206SCFC	UCP206SCFCD	70	2 3/4	2.0
1.5				–	–	–	–	–
1.5				–	–	–	–	–
1.9	25.7	15.4	13.9	–	–	–	–	–
1.9				–	–	–	–	–
1.9				–	–	–	–	–
1.9				UCP207SCFC	UCP207SCFCD	78	3 1/16	2.6
1.9				–	–	–	–	–
2.3	29.1	17.8	14.0	–	–	–	–	–
2.3				–	–	–	–	–
2.3				UCP208SCFC	UCP208SCFCD	86	3 3/8	3.1
2.5	34.1	21.3	14.0	–	–	–	–	–
2.5				–	–	–	–	–
2.5				–	–	–	–	–
2.5				UCP209SCFC	UCP209SCFCD	88	3 15/32	3.3
3.2	35.1	23.3	14.4	–	–	–	–	–
3.2				–	–	–	–	–
3.2				UCP210SCFC	UCP210SCFCD	97	3 13/16	4.2
3.2				–	–	–	–	–
9.2	62.0	38.3	13.2	UCP310SCC	UCP310SCCD	110	4 11/32	10.8
4.0	43.4	29.4	14.4	–	–	–	–	–
4.0				–	–	–	–	–
4.0				UCP211SCFC	UCP211SCFCD	99	3 29/32	5.2
4.0				–	–	–	–	–
10.9	71.6	45.0	13.2	–	–	–	–	–
10.9				UCP311SCC	UCP311SCCD	114	4 1/2	12.7
5.2	52.4	36.2	14.4	–	–	–	–	–
5.2				UCP212SCFC	UCP212SCFCD	114	4 1/2	6.7
5.2				–	–	–	–	–
5.2				–	–	–	–	–
12.6	81.9	52.2	13.2	UCP312SCC	UCP312SCCD	124	4 7/8	14.9
6.4	57.2	40.1	14.4	–	–	–	–	–
6.4				UCP213SCFC	UCP213SCFCD	114	4 1/2	8.1
14.2	92.7	59.9	13.2	–	–	–	–	–
14.2				UCP313SCC	UCP313SCCD	122	4 13/16	16.3
7.1	62.2	44.1	14.5	–	–	–	–	–
7.1				UCP214SCFC	UCP214SCFCD	124	4 7/8	9.0
14.9	104	68.2	13.2	–	–	–	–	–
14.9				UCP314SCC	UCP314SCCD	124	4 7/8	17.2

3. As for the triple-lip seal type product (205 is the double-lip seal type product), supplementary code L3 (or L2) follows the Part No. of unit or bearing.
(Example of Part No. : UCP206JSCL3, UC206L3)
4. For the dimensions and forms of applicable bearings, see the dimensional tables of ball bearing for unit.

UCP-SC
Cylindrical bore (with set screws), cast steel housing
d 75 ~ 140 mm

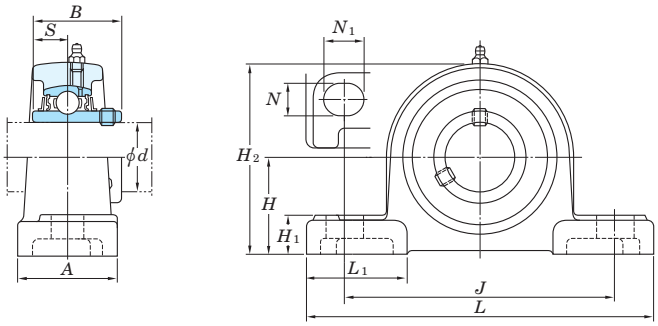

Shaft Dia. mm	Shaft Dia. inch	Dimensions inch / mm H	L	A	J	N	N1	H1	H2	L1	B	S	Bolt Size inch / mm	Standard Unit No.	Housing No.	Bearing No.
75	2 15/16	3 1/4	10 13/16	2 29/32	8 17/32	31/32	1 3/16	1 5/32	6 15/32	3 5/32	3.063	1.311	3/4	UCP215-47SC	P215SC	UC215-47
		82.6	275	74	217	25	30	29	164	80	77.8	33.3	M20	UCP215SC		UC215
	3													UCP215-48SC		UC215-48
	2 15/16	3 15/16	14 31/32	3 15/16	11 13/32	1 1/16	1 9/16	1 1/2	7 7/8	4 7/32	3.228	1.260	7/8	UCP315-47SC	P315SC	UC315-47
		100	380	100	290	27	40	38	200	107	82	32	M22	UCP315SC		UC315
	3													UCP315-48SC		UC315-48
80	3 1/8	3 1/2	11 1/2	3 1/16	9 1/8	31/32	1 3/8	1 7/32	6 15/16	3 3/8	3.252	1.311	3/4	UCP216-50SC	P216SC	UC216-50
		88.9	292	78	232	25	35	31	176	86	82.6	33.3	M20	UCP216SC		UC216
	–	4 11/64	15 3/4	4 11/32	11 13/16	1 1/16	1 9/16	1 1/2	8 5/16	4 23/32	3.386	1.339	7/8	UCP316SC	P316SC	UC316
		106	400	110	300	27	40	38	211	120	86	34	M22			
85	3 1/4	3 3/4	12 7/32	3 9/32	9 23/32	31/32	1 9/16	1 5/16	7 13/32	3 17/32	3.374	1.343	3/4	UCP217-52SC	P217SC	UC217-52
		95.2	310	83	247	25	40	33	188	90	85.7	34.1	M20	UCP217SC		UC217
	–	4 13/32	16 17/32	4 11/32	12 19/32	1 5/16	1 25/32	1 25/32	8 3/4	4 23/32	3.780	1.575	1	UCP317SC	P317SC	UC317
		112	420	110	320	33	45	45	222	120	96	40	M27			
90	3 1/2	4	12 7/8	3 15/32	10 5/16	1 1/16	1 25/32	1 3/8	7 7/8	4 3/32	3.780	1.563	7/8	UCP218-56SC	P218SC	UC218-56
		101.6	327	88	262	27	45	35	200	104	96	39.7	M22	UCP218SC		UC218
	3 1/2	4 41/64	16 15/16	4 11/32	13	1 5/16	1 25/32	1 25/32	9 7/32	4 23/32	3.780	1.575	1	UCP318-56SC	P318SC	UC318-56
		118	430	110	330	33	45	45	234	120	96	40	M27	UCP318SC		UC318
95	–	4 59/64	18 1/2	4 23/32	14 3/16	1 13/32	1 31/32	2	9 3/4	4 29/32	4.055	1.614	1 1/8	UCP319SC	P319SC	UC319
		125	470	120	360	36	50	51	248	125	103	41	M30			
100	3 15/16	5 33/64	19 9/32	4 23/32	14 31/32	1 13/32	1 31/32	2	10 3/4	5 1/2	4.252	1.654	1 1/8	UCP320SC	P320SC	UC320
		140	490	120	380	36	50	51	273	140	108	42	M30	UCP320-63SC		UC320-63
	4													UCP320-64SC		UC320-64
110	–	5 29/32	20 15/32	5 1/2	15 3/4	1 9/16	2 5/32	2 1/4	11 21/32	5 29/32	4.606	1.811	1 1/4	UCP322SC	P322SC	UC322
		150	520	140	400	40	55	57	296	150	117	46	M33			
120	–	6 19/64	22 7/16	5 1/2	17 23/32	1 9/16	2 5/32	2 1/4	12 7/16	6 5/16	4.961	2.008	1 1/4	UCP324SC	P324SC	UC324
		160	570	140	450	40	55	57	316	160	126	51	M33			
130	–	7 3/32	23 5/8	5 1/2	18 29/32	1 9/16	2 5/32	2 1/4	13 21/32	7 11/16	5.315	2.126	1 1/4	UCP326SC	P326SC	UC326
		180	600	140	480	40	55	57	355	195	135	54	M33			
140	–	7 7/8	24 13/32	5 1/2	19 11/16	1 9/16	2 5/32	2 3/4	15 15/32	7 9/32	5.709	2.323	1 1/4	UCP328SC	P328SC	UC328
		200	620	140	500	40	55	70	393	185	145	59	M33			

Remarks 1. In Part No. of unit and units with covers, fitting codes follow bore diameter numbers. (See **Table 10.5** in P.51.)
2. Part No. of applicable grease nipples are shown below.
A-1/4-28UNF ..... 205~210
A-PT1/8 ..... 211~218, 310~328

With Cast Iron Covers

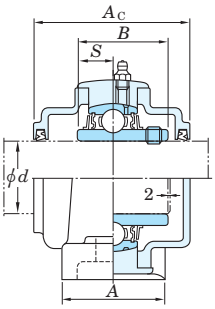

Variations of tolerance of distance from mounting bottom to center of spherical bore (Δ_{Hs})

Unit : mm

Housing No.		Δ_{Hs}
P205SC~P210SC	P310SC	±0.15
P211SC~P218SC	P311SC~P318SC	±0.2
	P319SC~P328SC	±0.3

Mass	Basic Load Ratings kN		Factor	With Cast Iron Covers Unit No.		Dimension mm	inch	Mass
				Open Ends Type	Closed End Type	A_c		
kg	C_r	C_{0r}	f_0					kg
7.7				–	–	–	–	–
7.7	67.4	48.3	14.5	UCP215SCFC	UCP215SCFCD	124	4 7/8	9.6
7.7				–	–	–	–	–
20.7				–	–	–	–	–
20.7	113	77.2	13.2	UCP315SCC	UCP315SCCD	134	5 9/32	23.2
20.7				–	–	–	–	–
9.3	72.7	53.0	14.6	–	–	–	–	–
9.3				UCP216SCFC	UCP216SCFCD	138	5 7/16	11.7
24.2	123	86.7	13.3	UCP316SCC	UCP316SCCD	138	5 7/16	27.1
11.7	84.0	61.9	14.5	–	–	–	–	–
11.7				UCP217SCFC	UCP217SCFCD	142	5 19/32	14.4
28.4	133	96.8	13.3	UCP317SCC	UCP317SCCD	146	5 3/4	31.7
13.5	96.1	71.5	14.5	–	–	–	–	–
13.5				UCP218SCFC	UCP218SCFCD	152	6	16.6
30.9	143	107	13.3	–	–	–	–	–
30.9				UCP318SCC	UCP318SCCD	150	5 29/32	34.7
37.9	153	119	13.3	UCP319SCC	UCP319SCCD	162	6 3/8	42.2
45.2				UCP320SCC	UCP320SCCD	174	6 27/32	50.8
45.2	173	141	13.2	–	–	–	–	–
45.2				–	–	–	–	–
53.1	205	180	13.2	UCP322SCC	UCP322SCCD	188	7 13/32	59.9
69.0	207	185	13.5	UCP324SCC	UCP324SCCD	196	7 23/32	78.5
85.6	229	214	13.6	UCP326SCC	UCP326SCCD	214	8 7/16	97.7
114	253	246	13.6	UCP328SCC	UCP328SCCD	222	8 3/4	129

3. As for the triple-lip seal type product (205 is the double-lip seal type product), supplementary code L3 (or L2) follows the Part No. of unit or bearing.
(Example of Part No. : UCP206JSCL3, UC206L3)
4. For the dimensions and forms of applicable bearings, see the dimensional tables of ball bearing for unit.

UKP-SC
Tapered bore (with adapter), cast steel housing
d_1 20 ~ 75 mm

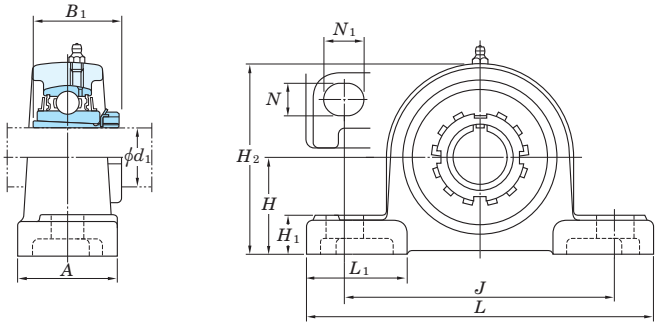

Shaft Dia. mm	Shaft Dia. inch	Dimensions inch / mm										Bolt Size inch / mm	Standard Unit No.	Standard Housing No.	Standard Bearing No.
d_1		H	L	A	J	N	N_1	H_1	H_2	L_1	B_1 1)				
20	3/4	1 7/16 36.5	5 1/2 140	1 1/2 38	4 1/8 105	1/2 13	23/32 18	5/8 16	2 25/32 71	1 11/16 43	1 5/32(1 3/8) 29(35)	3/8 M10	UKP205SC	P205SC	UK205
25	1	1 11/16 42.9	6 1/2 165	1 7/8 48	4 3/4 121	21/32 17	13/16 21	23/32 18	3 3/8 86	2 3/32 53	1 7/32(1 1/2) 31(38)	1/2 M14	UKP206SC	P206SC	UK206
30	1 1/8	1 7/8 47.6	6 9/16 167	1 7/8 48	5 127	21/32 17	13/16 21	3/4 19	3 25/32 96	2 51	1 3/8(1 11/16) 35(43)	1/2 M14	UKP207SC	P207SC	UK207
35	1 1/4 1 3/8	1 15/16 49.2	7 1/4 184	2 1/8 54	5 13/32 137	21/32 17	13/16 21	3/4 19	3 15/16 100	2 1/4 57	1 13/32(1 13/16) 36(46)	1/2 M14	UKP208SC	P208SC	UK208
40	1 1/2 1 5/8	2 1/8 54	7 15/32 190	2 1/8 54	5 3/4 146	21/32 17	13/16 21	25/32 20	4 1/4 108	2 3/8 60	1 17/32(1 31/32) 39(50)	1/2 M14	UKP209SC	P209SC	UK209
45	1 3/4	2 1/4 57.2	8 1/8 206	2 3/8 60	6 1/4 159	25/32 20	7/8 22	7/8 22	4 17/32 115	2 15/32 63	1 21/32(2 5/32) 42(55)	5/8 M16	UKP210SC	P210SC	UK210
	1 3/4	2 61/64 75	10 13/16 275	2 15/16 75	8 11/32 212	25/32 20	1 3/8 35	1 1/16 27	5 13/16 148	3 15/32 88	2 5/32 55	5/8 M16	UKP310SC	P310SC	UK310
50	1 7/8 2	2 1/2 63.5	8 5/8 219	2 3/8 60	6 23/32 171	25/32 20	7/8 22	15/16 24	5 127	2 3/4 70	1 25/32(2 5/16) 45(59)	5/8 M16	UKP211SC	P211SC	UK211
	1 7/8 2	3 5/32 80	12 7/32 310	3 5/32 80	9 9/32 236	25/32 20	1 1/2 38	1 3/16 30	6 7/32 158	3 17/32 90	2 5/16 59	5/8 M16	UKP311SC	P311SC	UK311
55	2 1/8	2 3/4 69.8	9 1/2 241	2 3/4 70	7 1/4 184	25/32 20	31/32 25	31/32 25	5 15/32 139	3 76	1 27/32(2 7/16) 47(62)	5/8 M16	UKP212SC	P212SC	UK212
	2 1/8	3 11/32 85	13 330	3 11/32 85	9 27/32 250	31/32 25	1 1/2 38	1 1/4 32	6 5/8 168	4 1/16 103	2 7/16 62	3/4 M20	UKP312SC	P312SC	UK312
60	2 1/4 2 3/8	3 76.2	10 7/16 265	2 3/4 70	8 203	31/32 25	1 3/16 30	1 3/32 28	5 15/16 151	3 1/16 78	1 31/32(2 9/16) 50(65)	3/4 M20	UKP213SC	P213SC	UK213
	2 1/4 2 3/8	3 35/64 90	13 3/8 340	3 17/32 90	10 1/4 260	31/32 25	1 1/2 38	1 3/8 35	7 178	4 11/32 110	2 9/16 65	3/4 M20	UKP313SC	P313SC	UK313
65	2 1/2	3 1/4 82.6	10 13/16 275	2 29/32 74	8 17/32 217	31/32 25	1 3/16 30	1 5/32 29	6 15/32 164	3 5/32 80	2 5/32(2 7/8) 55(73)	3/4 M20	UKP215SC	P215SC	UK215
	2 1/2	3 15/16 100	14 31/32 380	3 15/16 100	11 13/32 290	1 1/16 27	1 9/16 40	1 1/2 38	7 7/8 200	4 7/32 107	2 7/8 73	7/8 M22	UKP315SC	P315SC	UK315
70	2 3/4	3 1/2 88.9	11 1/2 292	3 1/16 78	9 1/8 232	31/32 25	1 3/8 35	1 7/32 31	6 15/16 176	3 3/8 86	2 5/16(3 1/16) 59(78)	3/4 M20	UKP216SC	P216SC	UK216
	2 3/4	4 11/64 106	15 3/4 400	4 11/32 110	11 13/16 300	1 1/16 27	1 9/16 40	1 1/2 38	8 5/16 211	4 23/32 120	3 1/16 78	7/8 M22	UKP316SC	P316SC	UK316
75	3	3 3/4 95.2	12 7/32 310	3 9/32 83	9 23/32 247	31/32 25	1 9/16 40	1 5/16 33	7 13/16 188	3 17/32 90	2 15/32(3 7/32) 63(82)	3/4 M20	UKP217SC	P217SC	UK217
	3	4 13/32 112	16 17/32 420	4 11/32 110	12 19/32 320	1 5/16 33	1 25/32 45	1 25/32 45	8 3/4 222	4 23/32 120	3 7/32 82	1 M27	UKP317SC	P317SC	UK317

Note 1) Codes shown in parentheses indicate the dimensions and Part No. of applicable adapter (H2300X series) for UK200L3 series (triple-lip seal type).

Remarks 1. In Part No. of unit and units with covers, fitting codes follow bore diameter numbers. (See **Table 10.5** in P.51.)

2. Part No. of applicable grease nipples are shown below.
A-1/4-28UNF.....205~210
A-PT1/8.....211~218, 310~328

With Cast Iron Covers

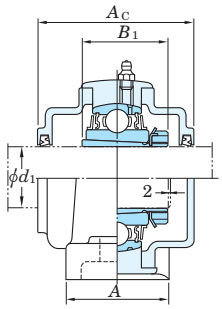

Variations of tolerance of distance from mounting bottom to center of spherical bore (Δ_{Hs})

Unit : mm

Housing No.		Δ_{Hs}
P205SC~P210SC	P310SC	±0.15
P211SC~P218SC	P311SC~P318SC	±0.2
	P319SC~P328SC	±0.3

Adapter[1] assembly No.	Mass kg	Basic Load Ratings kN C_r	C_{0r}	Factor f_0	With Cast Iron Covers Unit No. Open Ends Type	Closed End Type	Dimension mm A_c	inch	Mass kg
HE305X(HE2305X)	1.0	14.0	7.85	13.9	–	–	–	–	–
H305X(H2305X)	1.0				–	–	–	–	–
H306X(H2306X)	1.6	19.5	11.3	13.9	UKP206SCFC	UKP206SCFCD	70	2 3/4	2.1
HE306X(HE2306X)	1.6				–	–	–	–	–
HS307X(HS2307X)	2.1	25.7	15.4	13.9	–	–	–	–	–
H307X(H2307X)	2.1				UKP207SCFC	UKP207SCFCD	78	3 1/16	2.8
HE308X(HE2308X)	2.4				–	–	–	–	–
HS308X(HS2308X)	2.4	29.1	17.8	14.0	–	–	–	–	–
H308X(H2308X)	2.4				UKP208SCFC	UKP208SCFCD	86	3 3/8	3.2
HE309X(HE2309X)	2.7				–	–	–	–	–
H309X(H2309X)	2.7	34.1	21.3	14.0	UKP209SCFC	UKP209SCFCD	88	3 15/32	3.5
HS309X(HS2309X)	2.7				–	–	–	–	–
HE310X(HE2310X)	3.3	35.1	23.3	14.4	–	–	–	–	–
H310X(H2310X)	3.3				UKP210SCFC	UKP210SCFCD	97	3 13/16	4.3
HE2310X	9.3	62.0	38.3	13.2	–	–	–	–	–
H2310X	9.3				UKP310SCC	UKP310SCCD	110	4 11/32	11.0
HS311X(HS2311X)	4.2				–	–	–	–	–
H311X(H2311X)	4.2	43.4	29.4	14.4	UKP211SCFC	UKP211SCFCD	99	3 29/32	5.4
HE311X(HE2311X)	4.2				–	–	–	–	–
HS2311X	11.2				–	–	–	–	–
H2311X	11.2	71.6	45.0	13.2	UKP311SCC	UKP311SCCD	114	4 1/2	13.1
HE2311X	11.2				–	–	–	–	–
HS312X(HS2312X)	5.1	52.4	36.2	14.4	–	–	–	–	–
H312X(H2313X)	5.1				UKP212SCFC	UKP212SCFCD	114	4 1/2	6.6
HS2312X	12.5	81.9	52.2	13.2	–	–	–	–	–
H2312X					UKP312SCC	UKP312SCCD	124	4 7/8	14.9
HE313X(HE2313X)	6.3				–	–	–	–	–
H313X(H2313X)	6.3	57.2	40.1	14.4	UKP213SCFC	UKP213SCFCD	114	4 1/2	8.0
HS313X(HS2313X)	6.3				–	–	–	–	–
HE2313X	14.3				–	–	–	–	–
H2313X	14.3	92.7	59.9	13.2	UKP313SCC	UKP313SCCD	122	4 13/16	16.5
HS2313X	14.3				–	–	–	–	–
HE315X(HE2315X)	7.9	67.4	48.3	14.5	–	–	–	–	–
H315X(H2315X)	7.9				UKP215SCFC	UKP215SCFCD	124	4 7/8	9.8
HE2315X	20.9	113	77.2	13.2	–	–	–	–	–
H2315X	20.9				UKP315SCC	UKP315SCCD	134	5 9/32	23.7
HE316X(HE2316X)	9.6	72.7	53.0	14.6	–	–	–	–	–
H316X(H2316X)	9.6				UKP216SCFC	UKP216SCFCD	138	5 7/16	12.0
HE2316X	24.2	123	86.7	13.3	–	–	–	–	–
H2316X	24.2				UKP316SCC	UKP316SCCD	138	5 7/16	27.3
H317X(H2317X)	12.0	84.0	61.9	14.5	UKP217SCFC	UKP217SCFCD	142	5 19/32	14.7
HE317X(HE2317X)	12.0				–	–	–	–	–
H2317X	28.3	133	96.8	13.3	UKP317SCC	UKP317SCCD	146	5 3/4	31.8
HE2317X	28.3				–	–	–	–	–

3. In Part No. of unit with adapters and bearing with adapters, Part No. of applicable adapter follow the Part No. shown in the dimensional tables.
   (Example of Part No. : UKP206JSC + H306X, UK206 + H306X)
4. As for the triple-lip seal type product (205 is the double-lip seal type product), supplementary code L3 (or L2) follows the Part No. of unit or bearing.
   (Example of Part No. : UKP206JSCL3 + H2306X, UK206L3 + H2306X)
5. For the dimensions and forms of applicable bearings and adapters, see the dimensional tables of ball bearing for unit and adapter assemblies.

UKP-SC
Tapered bore (with adapter), cast steel housing
d_1 80 ~ 125 mm

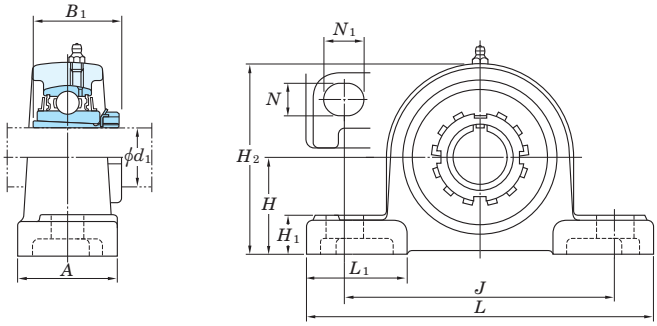

Shaft Dia. mm	Shaft Dia. inch	Dimensions inch / mm										Bolt Size inch / mm	Standard Unit No.	Standard Housing No.	Standard Bearing No.
d_1		H	L	A	J	N	N_1	H_1	H_2	L_1	B_1 1)				
80	–	4 101.6	12 7/8 327	3 15/32 88	10 5/16 262	1 1/16 27	1 25/32 45	1 3/8 35	7 7/8 200	4 3/32 104	2 9/16(3 3/8) 65(86)	7/8 M22	UKP218SC	P218SC	UK218
	–	4 41/64 118	16 15/16 430	4 11/32 110	13 330	1 5/16 33	1 25/32 45	1 25/32 45	9 7/32 234	4 23/32 120	3 3/8 86	1 M27	UKP318SC	P318SC	UK318
85	3 1/4	4 59/64 125	18 1/2 470	4 23/32 120	14 3/16 360	1 13/32 36	1 31/32 50	2 51	9 3/4 248	4 29/32 125	3 17/32 90	1 1/8 M30	UKP319SC	P319SC	UK319
90	3 1/2	5 33/64 140	19 9/32 490	4 23/32 120	14 31/32 380	1 13/32 36	1 31/32 50	2 51	10 3/4 273	5 1/2 140	3 13/16 97	1 1/8 M30	UKP320SC	P320SC	UK320
100	4	5 29/32 150	20 15/32 520	5 1/2 140	15 3/4 400	1 9/16 40	2 5/32 55	2 1/4 57	11 21/32 296	5 29/32 150	4 1/8 105	1 1/4 M33	UKP322SC	P322SC	UK322
110	–	6 19/64 160	22 7/16 570	5 1/2 140	17 23/32 450	1 9/16 40	2 5/32 55	2 1/4 57	12 7/16 316	6 5/16 160	4 13/32 112	1 1/4 M33	UKP324SC	P324SC	UK324
115	4 1/2	7 3/32 180	23 5/8 600	5 1/2 140	18 29/32 480	1 9/16 40	2 5/32 55	2 1/4 57	13 21/32 355	7 11/16 195	4 3/4 121	1 1/4 M33	UKP326SC	P326SC	UK326
125	–	7 7/8 200	24 13/32 620	5 1/2 140	19 11/16 500	1 9/16 40	2 5/32 55	2 3/4 70	15 15/32 393	7 9/32 185	5 5/32 131	1 1/4 M33	UKP328SC	P328SC	UK328

Note 1) Codes shown in parentheses indicate the dimensions and Part No. of applicable adapter (H2300X series) for UK200L3 series (triple-lip seal type).

Remarks 1. In Part No. of unit and units with covers, fitting codes follow bore diameter numbers. (See **Table 10.5** in P.51.)

2. Part No. of applicable grease nipples are shown below.
A-1/4-28UNF.....205~210
A-PT1/8.....211~218, 310~328

With Cast Iron Covers

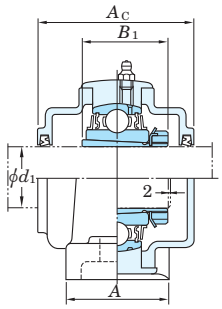

Variations of tolerance of distance from mounting bottom to center of spherical bore (Δ_{Hs})

Unit : mm

Housing No.		Δ_{Hs}
P205SC~P210SC	P310SC	±0.15
P211SC~P218SC	P311SC~P318SC	±0.2
	P319SC~P328SC	±0.3

Adapter[1] assembly No.	Mass kg	Basic Load Ratings kN C_r	C_{0r}	Factor f_0	With Cast Iron Covers Unit No. Open Ends Type	Closed End Type	Dimension mm A_c	inch	Mass kg
H318X(H2318X)	15.3	96.1	71.5	14.5	UKP218SCFC	UKP218SCFCD	152	6	18.4
H2318X	31.0	143	107	13.3	UKP318SCC	UKP318SCCD	150	5 29/32	35.2
HE2319X	38.2	153	119	13.3	–	–	–	–	–
H2319X	38.2				UKP319SCC	UKP319SCCD	162	6 3/8	42.9
HE2320X	44.9	173	141	13.2	–	–	–	–	–
H2320X	44.9				UKP320SCC	UKP320SCCD	174	6 27/32	51.1
H2322X	53.0	205	180	13.2	UKP322SCC	UKP322SCCD	188	7 13/32	59.9
HE2322X	53.0				–	–	–	–	–
H2324	69.3	207	185	13.5	UKP324SCC	UKP324SCCD	196	7 23/32	79.6
HE2326	85.4	229	214	13.6	–	–	–	–	–
H2326	85.4				UKP326SCC	UKP326SCCD	214	8 7/16	98.7
H2328	114	253	246	13.6	UKP328SCC	UKP328SCCD	222	8 3/4	131

3. In Part No. of unit with adapters and bearing with adapters, Part No. of applicable adapter follow the Part No. shown in the dimensional tables.
   (Example of Part No. : UKP206JSC + H306X, UK206 + H306X)
4. As for the triple-lip seal type product (205 is the double-lip seal type product), supplementary code L3 (or L2) follows the Part No. of unit or bearing.
   (Example of Part No. : UKP206JSCL3 + H2306X, UK206L3 + H2306X)
5. For the dimensions and forms of applicable bearings and adapters, see the dimensional tables of ball bearing for unit and adapter assemblies.

UCIP
Cylindrical bore (with set screws)
d 40 ~ 140 mm

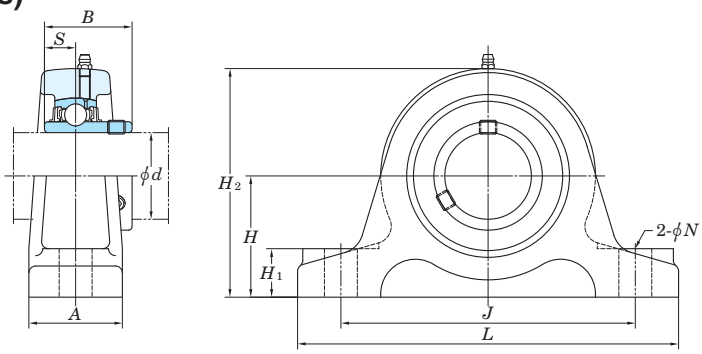

Shaft Dia. mm	Shaft Dia. inch	Dimensions inch / mm									Bolt Size inch / mm	Standard Unit No.	Standard Housing No.	Standard Bearing No.
d		H	L	A	J	N	H_1	H_2	B	S				
40	1 1/2	2 23/64	7 7/8	2 3/8	5 29/32	3/4	31/32	4 17/32	1.937	0.748	5/8	UCIP208-24	IP208	UC208-24
	1 9/16	60	200	60	150	19	25	115	49.2	19	M16	UCIP208-25		UC208-25
												UCIP208		UC208
45	1 5/8	2 3/4	8 9/32	2 3/8	6 19/64	3/4	31/32	5 1/32	1.937	0.748	5/8	UCIP209-26	IP209	UC209-26
	1 11/16	70	210	60	160	19	25	128	49.2	19	M16	UCIP209-27		UC209-27
	1 3/4											UCIP209-28		UC209-28
												UCIP209		UC209
50	1 7/8	2 3/4	8 21/32	2 3/8	6 11/16	3/4	1 3/32	5 3/16	2.031	0.748	5/8	UCIP210-30	IP210	UC210-30
	1 15/16	70	220	60	170	19	28	132	51.6	19	M16	UCIP210-31		UC210-31
												UCIP210		UC210
	2											UCIP210-32		UC210-32
55	2	3 5/32	9 1/16	2 3/8	7 3/32	3/4	1 3/32	5 13/16	2.189	0.874	5/8	UCIP211-32	IP211	UC211-32
	2 1/8	80	230	60	180	19	28	148	55.6	22.2	M16	UCIP211-34		UC211-34
												UCIP211		UC211
	2 3/16											UCIP211-35		UC211-35
60	2 1/4	3 5/32	10 1/4	2 3/4	7 7/8	7/8	1 3/16	6 3/32	2.563	1.000	3/4	UCIP212-36	IP212	UC212-36
		80	260	70	200	22	30	155	65.1	25.4	M20	UCIP212		UC212
	2 3/8											UCIP212-38		UC212-38
	2 7/16											UCIP212-39		UC212-39
65	2 1/2	3 35/64	11 1/32	2 3/4	8 21/32	7/8	1 3/16	6 25/32	2.563	1.000	3/4	UCIP213-40	IP213	UC213-40
		90	280	70	220	22	30	172	65.1	25.4	M20	UCIP213		UC213
	2 1/2	4 21/64	12 7/32	2 3/4	9 27/32	7/8	1 3/16	8 3/16	2.953	1.181	3/4	UCIP313-40	IP313	UC313-40
		110	310	70	250	22	30	208	75	30	M20	UCIP313		UC313
70	2 3/4	4 21/64	13	2 15/16	10 5/8	31/32	1 3/8	8 15/32	3.071	1.299	7/8	UCIP314-44	IP314	UC314-44
		110	330	75	270	25	35	215	78	33	M22	UCIP314		UC314
75	2 15/16	4 23/32	13 3/8	2 15/16	11 1/32	31/32	1 3/8	9 1/16	3.228	1.260	7/8	UCIP315-47	IP315	UC315-47
		120	340	75	280	25	35	230	82	32	M22	UCIP315		UC315
	3											UCIP315-48		UC315-48
80	–	4 23/32	13 25/32	3 11/32	11 27/64	31/32	1 9/16	9 1/4	3.386	1.339	7/8	UCIP316	IP316	UC316
		120	350	85	290	25	40	235	86	34	M22			
85	–	5 1/8	14 9/16	3 11/32	12 13/64	31/32	1 9/16	10 1/32	3.780	1.575	7/8	UCIP317	IP317	UC317
		130	370	85	310	25	40	255	96	40	M22			
90	3 1/2	5 1/8	15 3/4	3 11/32	13	1 5/32	1 25/32	10 1/4	3.780	1.575	1	UCIP318-56	IP318	UC318-56
		130	400	85	330	29	45	260	96	40	M27	UCIP318		UC318
95	–	5 29/32	16 5/32	3 11/32	13 25/64	1 5/32	1 25/32	11 7/32	4.055	1.614	1	UCIP319	IP319	UC319
		150	410	85	340	29	45	285	103	41	M27			
100	3 15/16	5 29/32	16 15/16	3 11/32	14 11/64	1 5/32	1 25/32	11 5/8	4.252	1.654	1	UCIP320	IP320	UC320
		150	430	85	360	29	45	295	108	42	M27	UCIP320-63		UC320-63
	4											UCIP320-64		UC320-64
110	–	6 11/16	19 9/32	3 15/16	16 9/64	1 1/4	1 31/32	13 3/16	4.606	1.811	1 1/8	UCIP322	IP322	UC322
		170	490	100	410	32	50	335	117	46	M30			
120	–	6 11/16	20 3/32	3 15/16	16 59/64	1 1/4	1 31/32	13 19/32	4.961	2.008	1 1/8	UCIP324	IP324	UC324
		170	510	100	430	32	50	345	126	51	M30			
130	–	7 7/8	21 21/32	4 11/32	18 1/2	1 1/4	1 31/32	15 11/32	5.315	2.126	1 1/8	UCIP326	IP326	UC326
		200	550	110	470	32	50	390	135	54	M30			
140	–	7 7/8	23 7/32	4 11/32	19 11/16	1 3/8	2 5/32	15 3/4	5.709	2.323	1 1/4	UCIP328	IP328	UC328
		200	590	110	500	35	55	400	145	59	M33			

Remarks 1. In Part No. of unit and units with covers, fitting codes follow bore diameter numbers. (See **Table 10.5** in P.51.)
2. Part No. of applicable grease nipples are shown below.
A-1/4-28UNF ..... 208~210
A-PT1/8 ..... 211~213, 313~328

With Pressed Steel Covers

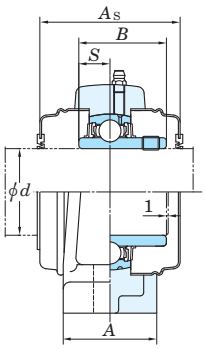

With Cast Iron Covers

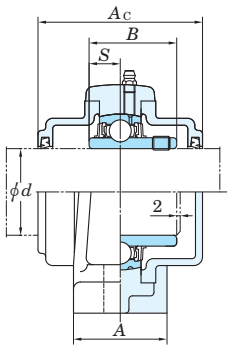

Variations of tolerance of distance from mounting bottom to center of spherical bore (Δ_{Hs}) and variations of tolerance of distance between centers of bolt holes (Δ_{Js})

Unit : mm

Housing No.		Δ_{Hs}	Δ_{Js}
IP208~IP210		±0.15	±0.5
IP211~IP213	IP313~IP318	±0.2	±0.7
	IP319~IP328	±0.3	

Mass	Basic Load Ratings kN		Factor	With Pressed Steel Covers					With Cast Iron Covers				
				Unit No.		Dimension mm	inch	Mass	Unit No.		Dimension mm	inch	Mass
kg	C_r	C_{0r}	f_0	Open Ends Type	Closed End Type	A_s		kg	Open Ends Type	Closed End Type	A_c		kg
3.4				–	–	–	–	–	–	–	–	–	–
3.4	29.1	17.8	14.0	–	–	–	–	–	–	–	–	–	–
3.4				UCIP208C	UCIP208CD	68	2 11/16	3.4	UCIP208FC	UCIP208FCD	86	3 3/8	4.2
3.9				–	–	–	–	–	–	–	–	–	–
3.9	34.1	21.3	14.0	–	–	–	–	–	–	–	–	–	–
3.9				–	–	–	–	–	–	–	–	–	–
3.9				UCIP209C	UCIP209CD	68	2 11/16	3.9	UCIP209FC	UCIP209FCD	88	3 15/32	4.7
4.8				–	–	–	–	–	–	–	–	–	–
4.8	35.1	23.3	14.4	–	–	–	–	–	–	–	–	–	–
4.8				UCIP210C	UCIP210CD	73	2 7/8	4.8	UCIP210FC	UCIP210FCD	97	3 13/16	5.8
4.8				–	–	–	–	–	–	–	–	–	–
5.3				–	–	–	–	–	–	–	–	–	–
5.3	43.4	29.4	14.4	–	–	–	–	–	–	–	–	–	–
5.3				UCIP211C	UCIP211CD	75	2 15/16	5.3	UCIP211FC	UCIP211FCD	99	3 29/32	6.3
5.3				–	–	–	–	–	–	–	–	–	–
7.2				–	–	–	–	–	–	–	–	–	–
7.2	52.4	36.2	14.4	UCIP212C	UCIP212CD	88	3 15/32	7.2	UCIP212FC	UCIP212FCD	114	4 1/2	8.7
7.2				–	–	–	–	–	–	–	–	–	–
7.2				–	–	–	–	–	–	–	–	–	–
8.8	57.2	40.1	14.4	–	–	–	–	–	–	–	–	–	–
8.8				UCIP213C	UCIP213CD	88	3 15/32	8.8	UCIP213FC	UCIP213FCD	114	4 1/2	10.5
13.4	92.7	59.9	13.2	–	–	–	–	–	–	–	–	–	–
13.4				–	–	–	–	–	UCIP313C	UCIP313CD	122	4 13/16	15.5
15.3	104	68.2	13.2	–	–	–	–	–	–	–	–	–	–
15.3				–	–	–	–	–	UCIP314C	UCIP314CD	124	4 7/8	17.6
17.6				–	–	–	–	–	–	–	–	–	–
17.6	113	77.2	13.2	–	–	–	–	–	UCIP315C	UCIP315CD	134	5 9/32	20.1
17.6				–	–	–	–	–	–	–	–	–	–
20.3	123	86.7	13.3	–	–	–	–	–	UCIP316C	UCIP316CD	138	5 7/16	23.2
25.9	133	96.8	13.3	–	–	–	–	–	UCIP317C	UCIP317CD	146	5 3/4	29.2
28.6	143	107	13.3	–	–	–	–	–	–	–	–	–	–
28.6				–	–	–	–	–	UCIP318C	UCIP318CD	150	5 29/32	32.4
31.7	153	119	13.3	–	–	–	–	–	UCIP319C	UCIP319CD	162	6 3/8	36.0
36.9				–	–	–	–	–	UCIP320C	UCIP320CD	174	6 27/32	42.5
36.9	173	141	13.2	–	–	–	–	–	–	–	–	–	–
36.9				–	–	–	–	–	–	–	–	–	–
52.4	205	180	13.2	–	–	–	–	–	UCIP322C	UCIP322CD	188	7 13/32	59.2
58.7	207	185	13.5	–	–	–	–	–	UCIP324C	UCIP324CD	196	7 23/32	68.2
76.2	229	214	13.6	–	–	–	–	–	UCIP326C	UCIP326CD	214	8 7/16	88.3
87.0	253	246	13.6	–	–	–	–	–	UCIP328C	UCIP328CD	222	8 3/4	102

3. As for the triple-lip seal type product, supplementary code L3 follows the Part No. of unit or bearing.
   (Example of Part No. : UCIP208JL3, UC208L3)
4. As for the dimensions and forms of applicable bearings, see the dimensional tables of ball bearing for unit.

UKIP
Tapered bore (with adapter)
d_1 35 ~ 125 mm

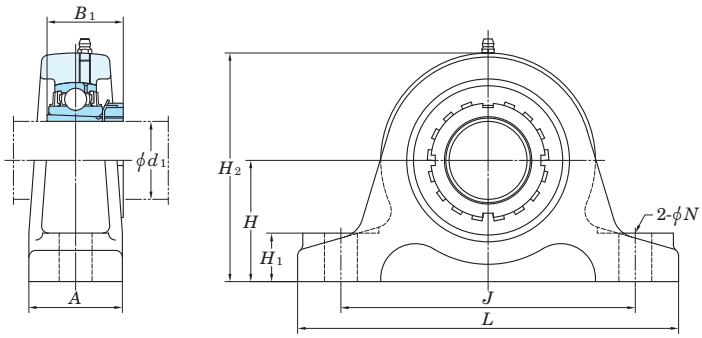

Shaft Dia. mm	Shaft Dia. inch	Dimensions inch / mm								Bolt Size inch / mm	Standard Unit No.	Housing No.	Bearing No.	Adapter 1) assembly No.
d_1		H	L	A	J	N	H_1	H_2	B_1 1)					
35	1 1/4 1 3/8	2 23/64 60	7 7/8 200	2 3/8 60	5 29/32 150	3/4 19	31/32 25	4 17/32 115	1 13/32(1 13/16) 36(46)	5/8 M16	**UKIP208**	IP208	UK208	HE308X(HE2308X) HS308X(HS2308X) H308X(H2308X)
40	1 1/2 1 5/8	2 3/4 70	8 9/32 210	2 3/8 60	6 19/64 160	3/4 19	31/32 25	5 1/32 128	1 17/32(1 31/32) 39(50)	5/8 M16	**UKIP209**	IP209	UK209	HE309X(HE2309X) H309X(H2309X) HS309X(HS2309X)
45	1 3/4	2 3/4 70	8 21/32 220	2 3/8 60	6 11/16 170	3/4 19	1 3/32 28	5 3/16 132	1 21/32(2 5/32) 42(55)	5/8 M16	**UKIP210**	IP210	UK210	HE310X(HE2310X) H310X(H2310X)
50	1 7/8 2	3 5/32 80	9 1/16 230	2 3/8 60	7 3/32 180	3/4 19	1 3/32 28	5 13/16 148	1 25/32(2 5/16) 45(59)	5/8 M16	**UKIP211**	IP211	UK211	HS311X(HS2311X) H311X(H2311X) HE311X(HE2311X)
55	2 1/8	3 5/32 80	10 1/4 260	2 3/4 70	7 7/8 200	7/8 22	1 3/16 30	6 3/32 155	1 27/32(2 7/16) 47(62)	3/4 M20	**UKIP212**	IP212	UK212	HS312X(HS2312X) H312X(H2313X)
60	2 1/4 2 3/8	3 35/64 90	11 1/32 280	2 3/4 70	8 21/32 220	7/8 22	1 3/16 30	6 25/32 172	1 31/32(2 9/16) 50(65)	3/4 M20	**UKIP213**	IP213	UK213	HE313X(HE2313X) H313X(H2313X) HS313X(HS2313X)
	2 1/4 2 3/8	4 21/64 110	12 7/32 310	2 3/4 70	9 27/32 250	7/8 22	1 3/16 30	8 3/16 208	2 9/16 65	3/4 M20	**UKIP313**	IP313	UK313	HE2313X H2313X HS2313X
65	2 1/2	4 23/32 120	13 3/8 340	2 15/16 75	11 1/32 280	31/32 25	1 3/8 35	9 1/16 230	2 7/8 73	7/8 M22	**UKIP315**	IP315	UK315	HE2315X H2315X
70	2 3/4	4 23/32 120	13 25/32 350	3 11/32 85	11 27/64 290	31/32 25	1 9/16 40	9 1/4 235	3 1/16 78	7/8 M22	**UKIP316**	IP316	UK316	HE2316X H2316X
75	3	5 1/8 130	14 9/16 370	3 11/32 85	12 13/64 310	31/32 25	1 9/16 40	10 1/32 255	3 7/32 82	7/8 M22	**UKIP317**	IP317	UK317	H2317X HE2317X
80	–	5 1/8 130	15 3/4 400	3 11/32 85	13 330	1 5/32 29	1 25/32 45	10 1/4 260	3 3/8 86	1 M27	**UKIP318**	IP318	UK318	H2318X
85	3 1/4	5 29/32 150	16 5/32 410	3 11/32 85	13 25/64 340	1 5/32 29	1 25/32 45	11 7/32 285	3 17/32 90	1 M27	**UKIP319**	IP319	UK319	HE2319X H2319X
90	3 1/2	5 29/32 150	16 15/16 430	3 11/32 85	14 11/64 360	1 5/32 29	1 25/32 45	11 5/8 295	3 13/16 97	1 M27	**UKIP320**	IP320	UK320	HE2320X H2320X
100	4	6 11/16 170	19 9/32 490	3 15/16 100	16 9/64 410	1 1/4 32	1 31/32 50	13 3/16 335	4 1/8 105	1 1/8 M30	**UKIP322**	IP322	UK322	H2322X HE2322X
110	–	6 11/16 170	20 3/32 510	3 15/16 100	16 59/64 430	1 1/4 32	1 31/32 50	13 19/32 345	4 13/32 112	1 1/8 M30	**UKIP324**	IP324	UK324	H2324
115	4 1/2	7 7/8 200	21 21/32 550	4 11/32 110	18 1/2 470	1 1/4 32	1 31/32 50	15 11/32 390	4 3/4 121	1 1/8 M30	**UKIP326**	IP326	UK326	HE2326 H2326
125	–	7 7/8 200	23 7/32 590	4 11/32 110	19 11/16 500	1 3/8 35	2 5/32 55	15 3/4 400	4 5/32 131	1 1/4 M33	**UKIP328**	IP328	UK328	H2328

Note 1) Codes shown in parentheses indicate the dimensions and Part No. of applicable adapter (H2300X series) for UK200L3 series (triple-lip seal type).

Remarks 1. In Part No. of unit and units with covers, fitting codes follow bore diameter numbers. (See **Table 10.5** in P.51.)

2. Part No. of applicable grease nipples are shown below.
A-1/4-28UNF.....208~210
A-PT1/8.....211~213, 313~328

With Pressed Steel Covers

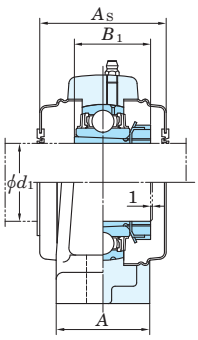

With Cast Iron Covers

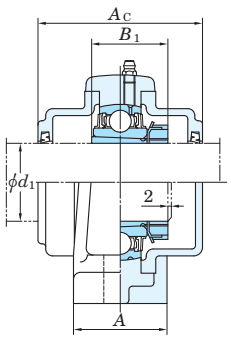

Variations of tolerance of distance from mounting bottom to center of spherical bore (Δ_{Hs}) and variations of tolerance of distance between centers of bolt holes (Δ_{Js})

Unit : mm

Housing No.		Δ_{Hs}	Δ_{Js}
IP208~IP210		±0.15	±0.5
IP211~IP213	IP313~IP318	±0.2	±0.7
	IP319~IP328	±0.3	

Mass	Basic Load Ratings kN		Factor	With Pressed Steel Covers				Mass	With Cast Iron Covers				Mass
				Unit No.		Dimension mm	inch		Unit No.		Dimension mm	inch	
kg	C_r	C_{0r}	f_0	Open Ends Type	Closed End Type	A_s		kg	Open Ends Type	Closed End Type	A_c		kg
3.5				–	–	–	–	–	–	–	–	–	–
3.5	29.1	17.8	14.0	–	–	–	–	–	–	–	–	–	–
3.5				UKIP208C	UKIP208CD	68	2 11/16	3.5	UKIP208FC	UKIP208FCD	86	3 3/8	4.4
4.0				–	–	–	–	–	–	–	–	–	–
4.0	34.1	21.3	14.0	UKIP209C	UKIP209CD	68	2 11/16	4.0	UKIP209FC	UKIP209FCD	88	3 15/32	4.9
4.0				–	–	–	–	–	–	–	–	–	–
4.8	35.1	23.3	14.4	–	–	–	–	–	–	–	–	–	–
4.8				UKIP210C	UKIP210CD	73	2 7/8	4.8	UKIP210FC	UKIP210FCD	97	3 13/16	5.8
5.3				–	–	–	–	–	–	–	–	–	–
5.3	43.4	29.4	14.4	UKIP211C	UKIP211CD	75	2 15/16	5.3	UKIP211FC	UKIP211FCD	99	3 29/32	5.9
5.3				–	–	–	–	–	–	–	–	–	–
7.1	52.4	36.2	14.4	–	–	–	–	–	–	–	–	–	–
7.1				UKIP212C	UKIP212CD	88	3 15/32	7.1	UKIP212FC	UKIP212FCD	114	4 1/2	8.6
8.7				–	–	–	–	–	–	–	–	–	–
8.7	57.2	40.1	14.4	UKIP213C	UKIP213CD	88	3 15/32	8.7	UKIP213FC	UKIP213FCD	114	4 1/2	10.4
8.7				–	–	–	–	–	–	–	–	–	–
13.5				–	–	–	–	–	–	–	–	–	–
13.5	92.7	59.9	13.2	–	–	–	–	–	UKIP313C	UKIP313CD	122	4 13/16	15.7
13.5				–	–	–	–	–	–	–	–	–	–
17.7	113	77.2	13.2	–	–	–	–	–	–	–	–	–	–
17.7				–	–	–	–	–	UKIP315C	UKIP315CD	134	5 9/32	20.5
20.4	123	86.7	13.3	–	–	–	–	–	–	–	–	–	–
20.4				–	–	–	–	–	UKIP316C	UKIP316CD	138	5 7/16	23.5
25.7	133	96.8	13.3	–	–	–	–	–	UKIP317C	UKIP317CD	146	5 3/4	29.2
25.7				–	–	–	–	–	–	–	–	–	–
28.7	143	107	13.3	–	–	–	–	–	UKIP318C	UKIP318CD	150	5 29/32	32.9
32.0	153	119	13.3	–	–	–	–	–	–	–	–	–	–
32.0				–	–	–	–	–	UKIP319C	UKIP319CD	162	6 3/8	36.7
36.6	173	141	13.2	–	–	–	–	–	–	–	–	–	–
36.6				–	–	–	–	–	UKIP320C	UKIP320CD	174	6 27/32	42.8
52.2	205	180	13.2	–	–	–	–	–	UKIP322C	UKIP322CD	188	7 13/32	59.1
52.2				–	–	–	–	–	–	–	–	–	–
59.0	207	185	13.5	–	–	–	–	–	UKIP324C	UKIP324CD	196	7 23/32	69.3
76.0	229	214	13.6	–	–	–	–	–	–	–	–	–	–
76.0				–	–	–	–	–	UKIP326C	UKIP326CD	214	8 7/16	89.3
87.0	253	246	13.6	–	–	–	–	–	UKIP328C	UKIP328CD	222	8 3/4	104

3. In Part No. of unit with adapters and bearing with adapters, Part No. of applicable adapter follow the Part No. shown in the dimensional tables. (Example of Part No. : UKIP208J + H308X, UK208 + H308X)
4. As for the triple-lip seal type product, supplementary code L3 follows the Part No. of unit or bearing. (Example of Part No. : UKIP208JL3 + H2308X, UK208L3 + H2308X)
5. For the dimensions and forms of applicable bearings and adapters, see the dimensional tables of ball bearing for unit and adapter assemblies.

UCPA
Cylindrical bore (with set screws)
d 12 ~ 50 mm

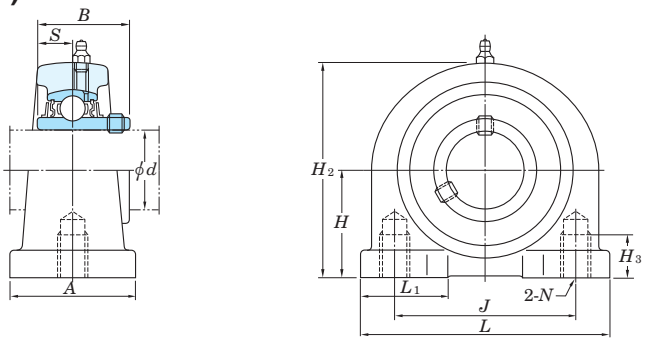

Shaft Dia. mm	Shaft Dia. inch	Dimensions inch / mm										Unit No.	Housing No.	Bearing No.
d		H	L	A	J	N	H_2	H_3	L_1	B	S			
12												UCPA201		UC201
	1/2											UCPA201-8		UC201-8
15												UCPA202		UC202
	5/8	1 3/16	3	1 9/16	2 3/64		2 3/8	1/2	1 1/16	1.220	0.500	UCPA202-10	PA204	UC202-10
		30.2	76	40	52	M10×1.5	60	13	27	31	12.7			
17												UCPA203		UC203
	3/4											UCPA204-12		UC204-12
20												UCPA204		UC204
	7/8											UCPA205-14		UC205-14
25	15/16	1 7/16	3 5/16	1 25/32	2 13/64		2 25/32	1/2	1 3/16	1.343	0.563	UCPA205-15	PA205	UC205-15
		36.5	84	45	56	M10×1.5	71	13	30	34.1	14.3	UCPA205		UC205
	1											UCPA205-16		UC205-16
	1 1/8											UCPA206-18		UC206-18
30		1 11/16	3 11/16	1 31/32	2 19/32		3 5/16	23/32	1 13/32	1.500	0.626	UCPA206	PA206	UC206
	1 3/16	42.9	94	50	66	M14×2	84	18	36	38.1	15.9	UCPA206-19		UC206-19
	1 1/4											UCPA206-20		UC206-20
	1 1/4											UCPA207-20		UC207-20
	1 5/16											UCPA207-21		UC207-21
35	1 3/8	1 7/8	3 11/32	2 5/32	3 5/32		3 21/32	25/32	1 5/8	1.689	0.689	UCPA207-22	PA207	UC207-22
		47.6	110	55	80	M14×2	93	20	41	42.9	17.5	UCPA207		UC207
	1 7/16											UCPA207-23		UC207-23
	1 1/2											UCPA208-24		UC208-24
40	1 9/16	1 15/16	4 9/16	2 9/32	3 5/16		3 15/16	25/32	1 5/8	1.937	0.748	UCPA208-25	PA208	UC208-25
		49.2	116	58	84	M14×2	100	20	41	49.2	19	UCPA208		UC208
	1 5/8											UCPA209-26		UC209-26
45	1 11/16	2 9/64	4 23/32	2 3/8	3 35/64		4 3/16	31/32	1 21/32	1.937	0.748	UCPA209-27	PA209	UC209-27
	1 3/4	54.2	120	60	90	M14×2	106	25	42	49.2	19	UCPA209-28		UC209-28
												UCPA209		UC209
	1 7/8											UCPA210-30		UC210-30
50	1 15/16	2 1/4	5 1/8	2 17/32	3 45/64		4 7/16	31/32	1 27/32	2.031	0.748	UCPA210-31	PA210	UC210-31
		57.2	130	64	94	M16×2	113	25	47	51.6	19	UCPA210		UC210
	2											UCPA210-32		UC210-32

Remarks 1. In Part No. of unit, fitting codes follow bore diameter codes. (See **Table 10.5** in P.51.)
2. Part No. of the applicable grease nipple is A-1/4-28UNF.
3. As for the triple-lip seal type product (from 201 to 205 are the double-lip seal type products), supplementary code L3 (or L2) follows Part No. of unit or bearing. (Example of Part No. : UCPA206JL3, UC206L3)

Variations of tolerance of distance from mounting bottom to center of spherical bore (Δ_{Hs}) and variations of tolerance of distance between centers of bolt holes (Δ_{Js})

Unit : mm

Housing No.	Δ_{Hs}	Δ_{Js}
PA204~PA210	±0.15	±0.5

	Basic Load Ratings kN		Factor	Mass
	C_r	C_{0r}	f_0	kg
	12.8	6.65	13.2	0.64 0.62 0.61 0.59
	14.0	7.85	13.9	0.83
	19.5	11.3	13.9	1.2
	25.7	15.4	13.9	1.7
	29.1	17.8	14.0	2.0
	34.1	21.3	14.0	2.2
	35.1	23.3	14.4	2.8

4. As for the dimensions and forms of applicable bearings, see the dimensional tables of ball bearing for unit.
5. Tapered bore (with adapter) type products are also available. (Example of Part No. : UKPA205J + H305X, UK205 + H305X)

UCPH
Cylindrical bore (with set screws)
d 12 ~ 50 mm

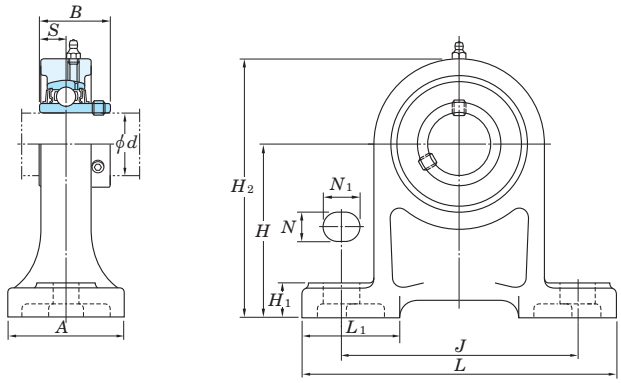

Shaft Dia. mm	Shaft Dia. inch	Dimensions inch / mm											Bolt Size inch / mm	Unit No.	Housing No.	Bearing No.
d		H	L	A	J	N	N_1	H_1	H_2	L_1	B	S				
12														**UCPH201**		UC201
	1/2													**UCPH201-8**		UC201-8
15														**UCPH202**		UC202
	5/8	2 3/4	5	1 9/16	3 3/4	1/2	3/4	19/32	3 21/32	1 13/16	1.220	0.500	3/8	**UCPH202-10**	PH204	UC202-10
17		70	127	40	95	13	19	15	101	46	31	12.7	M10	**UCPH203**		UC203
	3/4													**UCPH204-12**		UC204-12
20														**UCPH204**		UC204
	7/8													**UCPH205-14**		UC205-14
25	15/16	3 5/32	5 1/2	1 31/32	4 1/8	1/2	3/4	5/8	3 1/2	1 15/16	1.343	0.563	3/8	**UCPH205-15**	PH205	UC205-15
		80	140	50	105	13	19	16	114	49	34.1	14.3	M10	**UCPH205**		UC205
	1													**UCPH205-16**		UC205-16
	1 1/8													**UCPH206-18**		UC206-18
30		3 35/64	6 1/2	1 31/32	4 3/4	21/32	13/16	23/32	5 1/8	1 7/32	1.500	0.626	1/2	**UCPH206**	PH206	UC206
	1 3/16	90	165	50	121	17	21	18	130	56	38.1	15.9	M14	**UCPH206-19**		UC206-19
	1 1/4													**UCPH206-20**		UC206-20
	1 1/4													**UCPH207-20**		UC207-20
	1 5/16	3 47/64	6 9/16	2 3/8	5	21/32	13/16	23/32	5 1/2	1 1/8	1.689	0.689	1/2	**UCPH207-21**		UC207-21
35	1 3/8	95	167	60	127	17	21	18	140	54	42.9	17.5	M14	**UCPH207-22**	PH207	UC207-22
														UCPH207		UC207
	1 7/16													**UCPH207-23**		UC207-23
	1 1/2													**UCPH208-24**		UC208-24
40	1 9/16	3 15/16	7 1/4	2 3/4	5 13/32	21/32	13/16	25/32	5 29/32	2 1/4	1.937	0.748	1/2	**UCPH208-25**	PH208	UC208-25
		100	184	70	137	17	21	20	150	57	49.2	19	M14	**UCPH208**		UC208
	1 5/8													**UCPH209-26**		UC209-26
45	1 11/16	4 9/64	7 15/32	2 3/4	5 3/4	21/32	13/16	25/32	6 7/32	2 9/32	1.937	0.748	1/2	**UCPH209-27**	PH209	UC209-27
	1 3/4	105	190	70	146	17	21	20	158	58	49.2	19	M14	**UCPH209-28**		UC209-28
														UCPH209		UC209
	1 7/8													**UCPH210-30**		UC210-30
50	1 15/16	4 21/64	8 1/8	2 3/4	6 1/4	25/32	7/8	7/8	6 1/2	2 9/16	2.031	0.748	5/8	**UCPH210-31**	PH210	UC210-31
		110	206	70	159	20	22	22	165	65	51.6	19	M16	**UCPH210**		UC210
	2													**UCPH210-32**		UC210-32

Remarks 1. In Part No. of unit, fitting codes follow bore diameter codes. (See **Table 10.5** in P.51.)
2. Part No. of the applicable grease nipple is A-1/4-28UNF.
3. As for the triple-lip seal type product (from 201 to 205 are the double-lip seal type products), supplementary code L3 (or L2) follows Part No. of unit or bearing. (Example of Part No. : UCPH206JL3, UC206L3)

Variations of tolerance of distance from mounting bottom to center of spherical bore (Δ_{Hs})

Unit : mm

Housing No.	Δ_{Hs}
PH204~PH210	±0.15

	Basic Load Ratings kN		Factor	Mass
	C_r	C_{0r}	f_0	kg
	12.8	6.65	13.2	0.96 0.94 0.93 0.91
	14.0	7.85	13.9	1.2
	19.5	11.3	13.9	1.6
	25.7	15.4	13.9	2.0
	29.1	17.8	14.0	2.7
	34.1	21.3	14.0	3.0
	35.1	23.3	14.4	3.5

4. As for the dimensions and forms of applicable bearings, see the dimensional tables of ball bearing for unit.
5. Tapered bore (with adapter) type products are also available. (Example of Part No. : UKPH205J + H305X, UK205 + H305X)

BLP
Cylindrical bore
(with set screws)
ALP
Cylindrical bore
(with eccentric locking collar)
d 12 ~ 40 mm

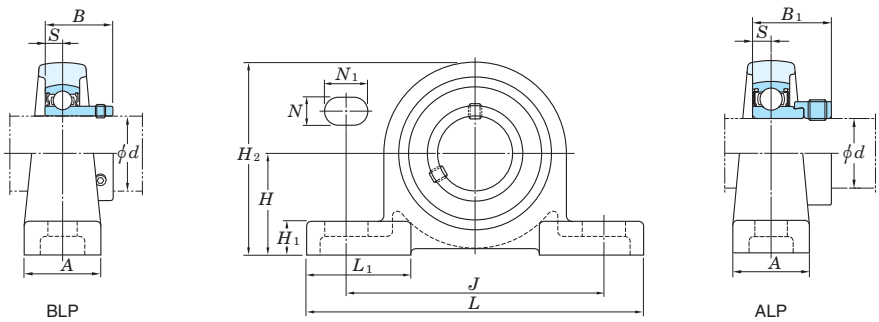

Shaft Dia. mm	Shaft Dia. inch	Dimensions inch / mm												Bolt Size inch / mm	Unit No.	Bearing No.
d		H	L	A	J	N	N_1	H_1	H_2	L_1	S	BLP B	ALP B_1			
12															BLP201	SB201
	1/2														BLP201-8	SB201-8
15		1 3/16	4 1/2	31/32	3 7/16	7/16	5/8	15/32	2 1/4	1 3/8	0.236	0.866	1.122	3/8	BLP202	SB202
	5/8	30.2	114	25	87	11	16	12	57	35	6	22	28.5	M10	BLP202-10	SB202-10
17															BLP203	SB203
20	3/4	1 5/16	4 29/32	1 1/16	3 13/16	7/16	5/8	1/2	2 9/16	1 1/2	0.276	0.984	1.161	3/8	BLP204-12	SB204-12
		33.3	125	27	97	11	16	13	65	38	7	25	29.5	M10	BLP204	SB204
	7/8														BLP205-14	SB205-14
25	15/16	1 7/16	5 1/8	1 5/32	3 15/16	7/16	5/8	1/2	2 25/32	1 17/32	0.295	1.063	1.201	3/8	BLP205-15	SB205-15
		36.5	130	29	100	11	16	13	71	39	7.5	27	30.5	M10	BLP205	SB205
	1														BLP205-16	SB205-16
	1 1/8														BLP206-18	SB206-18
30		1 11/16	6 5/32	1 5/16	4 23/32	9/16	13/16	9/16	3 9/32	1 27/32	0.315	1.181	1.335	1/2	BLP206	SB206
	1 3/16	42.9	156	33	120	14	21	14	83	47	8	30	33.9	M12	BLP206-19	SB206-19
	1 1/4														BLP206-20	SB206-20
	1 1/4														BLP207-20	SB207-20
	1 5/16															
35	1 3/8	1 7/8	6 1/2	1 3/8	5	9/16	13/16	5/8	3 21/32	1 31/32	0.335	1.260	1.437	1/2	BLP207-22	SB207-22
		47.6	165	35	127	14	21	16	93	50	8.5	32	36.5	M12	BLP207	SB207
	1 7/16														BLP207-23	SB207-23
	1 1/2														BLP208-24	SB208-24
40	1 9/16	2	7 1/4	1 15/32	5 1/2	9/16	7/8	23/32	4 1/32	2 5/32	0.354	1.339	1.595	1/2		
		50.8	184	37	140	14	22	18	102	55	9	34	40.5	M12	BLP208	SB208

Remarks 1. In Part No. of unit, fitting codes follow bore diameter codes. (See **Table 10.5** in P.51.)
2. Allowable load to housing in radial direction is approximately half of basic load rating of bearing, C_r (when safety factor is 4).
3. For the dimensions and forms of applicable bearings, see the dimensional tables of ball bearing for unit.

Variations of tolerance of distance from mounting bottom to center of spherical bore (Δ_{Hs})

Unit : mm

Housing No.	Δ_{Hs}
LP203~LP208	±0.15

Unit No.	Bearing No.	Housing No.	Basic Load Ratings kN C_r	C_{0r}	Factor f_0	Mass kg BLP	ALP
ALP201	SA201	LP203	9.55	4.80	13.2	0.36	0.39
ALP201-8	SA201-8						
ALP202	SA202						
ALP202-10	SA202-10						
ALP203	SA203						
ALP204-12	SA204-12	LP204	12.8	6.65	13.2	0.51	0.51
ALP204	SA204						
ALP205-14	SA205-14	LP205	14.0	7.85	13.9	0.57	0.61
ALP205-15	SA205-15						
ALP205	SA205						
ALP205-16	SA205-16						
ALP206-18	SA206-18	LP206	19.5	11.3	13.9	0.69	0.72
ALP206	SA206						
ALP206-19	SA206-19						
ALP206-20	SA206-20						
ALP207-20	SA207-20	LP207	25.7	15.4	13.9	0.94	1.0
ALP207-21	SA207-21						
ALP207-22	SA207-22						
ALP207	SA207						
ALP207-23	SA207-23						
ALP208-24	SA208-24	LP208	29.1	17.8	14.0	1.8	1.9
ALP208-25	SA208-25						
ALP208	SA208						

UP
Cylindrical bore (with set screws)
d 10 ~ 30 mm

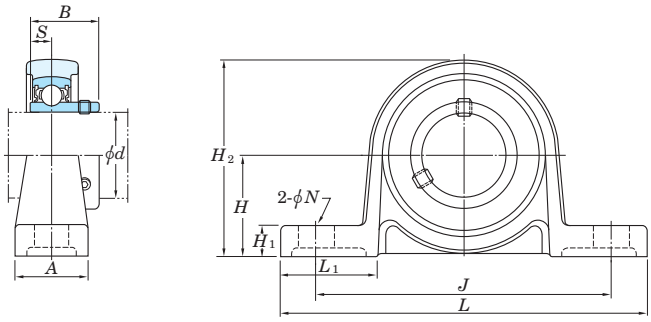

Shaft Dia. mm d	Dimensions inch / mm H	L	A	J	N	H_1	H_2	L_1	B	S	Bolt Size inch / mm	Standard Unit No.	Housing No.	Bearing No.
10	45/64 18	2 5/8 67	5/8 16	2 3/32 53	9/32 7	1/4 6	1 3/8 35	23/32 18	0.591 15	0.197 5	1/4 M6	**UP000**	P000	SU000
12	3/4 19	2 25/32 71	5/8 16	2 13/64 56	9/32 7	1/4 6	1 1/2 38	3/4 19	0.591 15	0.197 5	1/4 M6	**UP001**	P001	SU001
15	55/64 22	3 5/32 80	5/8 16	2 31/64 63	9/32 7	9/32 7	1 11/16 43	13/16 21	0.650 16.5	0.217 5.5	1/4 M6	**UP002**	P002	SU002
17	15/16 24	3 11/32 85	23/32 18	2 41/64 67	9/32 7	9/32 7	1 27/32 47	13/16 21	0.689 17.5	0.236 6	1/4 M6	**UP003**	P003	SU003
20	1 7/64 28	3 15/16 100	25/32 20	3 5/32 80	13/32 10	11/32 9	2 5/32 55	31/32 25	0.827 21	0.276 7	5/16 M8	**UP004**	P004	SU004
25	1 17/64 32	4 13/32 112	25/32 20	3 35/64 90	13/32 10	13/32 10	2 7/16 62	1 3/32 28	0.866 22	0.276 7	5/16 M8	**UP005**	P005	SU005
30	1 27/64 36	5 3/16 132	1 1/32 26	4 11/64 106	1/2 13	7/16 11	2 3/4 70	1 11/32 34	0.965 24.5	0.295 7.5	3/8 M10	**UP006**	P006	SU006

Remarks 1. In Part No. of unit and units with covers, fitting codes follow bore diameter codes. (See **Table 10.5** in P.51.)
2. Housing is made from special light alloy.
3. For the dimensions and forms of applicable bearings, see the dimensional tables of ball bearing for unit.

Open Ends Type

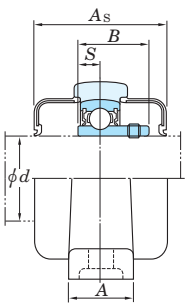

Closed End Type

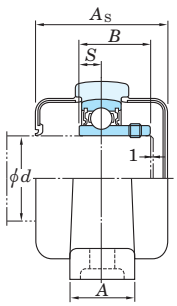

Variations of tolerance of distance from mounting bottom to center of spherical bore (Δ_{Hs}) and variations of tolerance of distance between centers of bolt holes (Δ_{Js})

Unit : mm

Housing No.	Δ_{Hs}	Δ_{Js}
P000~P006	±0.15	±0.3

Mass	Basic Load Ratings kN		Factor	With Rubber Coated Covers Unit No.		Dimension mm	inch	Mass
kg	C_r	C_{0r}	f_0	Open Ends Type	Closed End Type	A_s		kg
0.070	4.55	1.95	12.3	UP000C	UP000CD	29	1 5/32	0.070
0.090	5.10	2.40	13.2	UP001C	UP001CD	29	1 5/32	0.090
0.11	5.60	2.85	13.9	UP002C	UP002CD	31	1 7/32	0.11
0.15	6.00	3.25	14.4	UP003C	UP003CD	33	1 5/16	0.15
0.23	9.40	5.05	13.9	UP004C	UP004CD	38	1 1/2	0.23
0.28	10.1	5.85	14.5	UP005C	UP005CD	40	1 9/16	0.28
0.42	13.2	8.25	14.7	UP006C	UP006CD	44	1 23/32	0.42

UCSP-H1S6
Cylindrical bore (with set screws)
d 20 ~ 50 mm

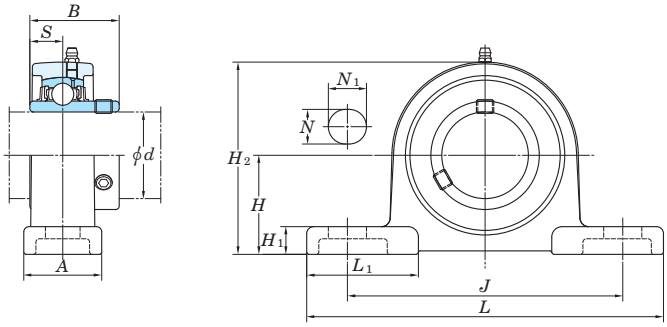

Shaft Dia. mm d	Dimensions inch / mm H	L	A	J	N	N_1	H_1	H_2	L_1	B	S	Bolt Size inch / mm	Standard Unit No.	Housing No.	Bearing No.
20	1 5/16 33.3	5 127	1 3/16 30	3 3/4 95	1/2 13	23/32 18	7/16 11	2 15/32 63	1 21/32 42	1.220 31	0.500 12.7	3/8 M10	**UCSP204H1S6**	SP204H1	UC204S6
25	1 7/16 36.5	5 1/2 140	1 3/16 30	4 1/8 105	1/2 13	3/4 19	15/32 12	2 23/32 69	1 13/16 46	1.343 34.1	0.563 14.3	3/8 M10	**UCSP205H1S6**	SP205H1	UC205S6
30	1 11/16 42.9	6 1/2 165	1 13/32 36	4 3/4 121	21/32 17	13/16 21	1/2 13	3 3/16 81	2 1/8 54	1.500 38.1	0.626 15.9	1/2 M14	**UCSP206H1S6**	SP206H1	UC206S6
35	1 7/8 47.6	6 9/16 167	1 1/2 38	5 127	21/32 17	13/16 21	9/16 14	3 19/32 91	2 51	1.689 42.9	0.689 17.5	1/2 M14	**UCSP207H1S6**	SP207H1	UC207S6
40	1 15/16 49.2	7 1/4 184	1 9/16 40	5 13/32 137	21/32 17	13/16 21	9/16 14	3 13/16 97	2 3/8 60	1.937 49.2	0.748 19	1/2 M14	**UCSP208H1S6**	SP208H1	UC208S6
45	2 1/8 54	7 15/32 190	1 9/16 40	5 3/4 146	21/32 17	13/16 21	19/32 15	4 3/32 104	2 13/32 61	1.937 49.2	0.748 19	1/2 M14	**UCSP209H1S6**	SP209H1	UC209S6
50	2 1/4 57.2	8 1/8 206	1 25/32 45	6 1/4 159	25/32 20	7/8 22	5/8 16	4 3/8 111	2 9/16 65	2.031 51.6	0.748 19	5/8 M16	**UCSP210H1S6**	SP210H1	UC210S6

Remarks 1. In Part No. of unit and units with covers, fitting codes follow bore diameter codes. (See **Table 10.5** in P.51.)
2. Part No. of the applicable grease nipple is A-1/4-28UNFN12.
3. For the dimensions and forms of applicable bearings, see the dimensional tables of ball bearing for unit.

With Pressed Stainless Steel Covers

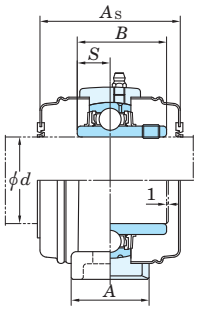

Variations of tolerance of distance from mounting bottom to center of spherical bore (Δ_{Hs}) and variations of tolerance of distance between centers of bolt holes (Δ_{Js})

Unit : mm

Housing No.	Δ_{Hs}	Δ_{Js}
SP204H1~SP210H1	±0.15	±0.3

Mass	Basic Load Ratings kN		Factor	With Pressed Stainless Steel Covers Unit No.		Dimension mm	inch	Mass
kg	C_r	C_{0r}	f_0	Open Ends Type	Closed End Type	A_s		kg
0.54	10.9	5.35	13.2	UCSP204H1CS6	UCSP204H1CDS6	45	1 25/32	0.54
0.70	11.9	6.3	13.9	UCSP205H1CS6	UCSP205H1CDS6	49	1 15/16	0.70
1.0	16.5	9.05	13.9	UCSP206H1CS6	UCSP206H1CDS6	53	2 3/32	1.0
1.4	21.8	12.3	13.9	UCSP207H1CS6	UCSP207H1CDS6	60	2 3/8	1.4
1.7	24.8	14.3	14.0	UCSP208H1CS6	UCSP208H1CDS6	69	2 23/32	1.7
1.8	27.8	16.2	14.0	UCSP209H1CS6	UCSP209H1CDS6	69	2 23/32	1.8
2.3	29.8	18.6	14.4	UCSP210H1CS6	UCSP210H1CDS6	74	2 29/32	2.3

UCSPA-H1S6
Cylindrical bore (with set screws)
d 20 ~ 40 mm

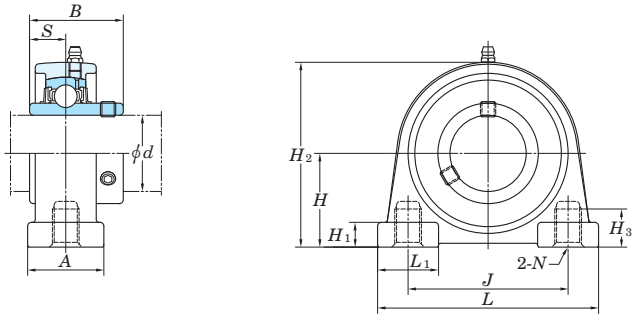

Shaft Dia. mm	Dimensions inch / mm											Standard		
												Unit No.	Housing No.	Bearing No.
d	H	L	A	J	N	H_1	H_2	H_3	L_1	B	S			
20	1 3/16	3	1 3/16	2 3/64		13/32	2 3/8	1/2	7/8	1.220	0.500	**UCSPA204H1S6**	SPA204H1	UC204S6
	30.2	76	30	52	M10×1.5	10	60	13	22	31	12.7			
25	1 7/16	3 5/16	1 3/16	2 13/64		15/32	2 23/32	1/2	15/16	1.343	0.563	**UCSPA205H1S6**	SPA205H1	UC205S6
	36.5	84	30	56	M10×1.5	12	69	13	24	34.1	14.3			
30	1 11/16	3 11/16	1 13/32	2 19/32		15/32	3 3/16	23/32	1 3/32	1.500	0.626	**UCSPA206H1S6**	SPA206H1	UC206S6
	42.9	94	36	66	M14×2	12	81	18	28	38.1	15.9			
35	1 7/8	3 11/32	1 1/2	3 5/32		1/2	3 19/32	25/32	1 3/16	1.689	0.689	**UCSPA207H1S6**	SPA207H1	UC207S6
	47.6	110	38	80	M14×2	13	91	20	30	42.9	17.5			
40	1 15/16	4 9/16	1 9/16	3 5/16		1/2	3 13/16	25/32	1 1/4	1.937	0.748	**UCSPA208H1S6**	SPA208H1	UC208S6
	49.2	116	40	84	M14×2	13	97	20	32	49.2	19			

Remarks 1. In Part No. of unit and units with covers, fitting codes follow bore diameter codes. (See **Table 10.5** in P.51.)
2. Part No. of the applicable grease nipple is A-1/4-28UNFN12.
3. For the dimensions and forms of applicable bearings, see the dimensional tables of ball bearing for unit.

With Pressed Stainless Steel Covers

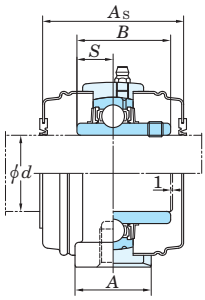

Variations of tolerance of distance from mounting bottom to center of spherical bore (Δ_{Hs}) and variations of tolerance of distance between centers of bolt holes (Δ_{Js})

Unit : mm

Housing No.	Δ_{Hs}	Δ_{Js}
SPA204H1~SPA208H1	±0.15	±0.5

Mass	Basic Load Ratings kN		Factor	With Pressed Stainless Steel Covers Unit No.		Dimension mm	inch	Mass
				Open Ends Type	Closed End Type	A_s		
kg	C_r	C_{0r}	f_0					kg
0.46	10.9	5.35	13.2	UCSPA204H1CS6	UCSPA204H1CDS6	45	1 25/32	0.46
0.63	11.9	6.3	13.9	UCSPA205H1CS6	UCSPA205H1CDS6	49	1 15/16	0.63
0.91	16.5	9.05	13.9	UCSPA206H1CS6	UCSPA206H1CDS6	53	2 3/32	0.91
1.3	21.8	12.3	13.9	UCSPA207H1CS6	UCSPA207H1CDS6	60	2 3/8	1.3
1.5	24.8	14.3	14.0	UCSPA208H1CS6	UCSPA208H1CDS6	69	2 23/32	1.5

USP-S6
Cylindrical bore (with set screws)
d 10 ~ 30 mm

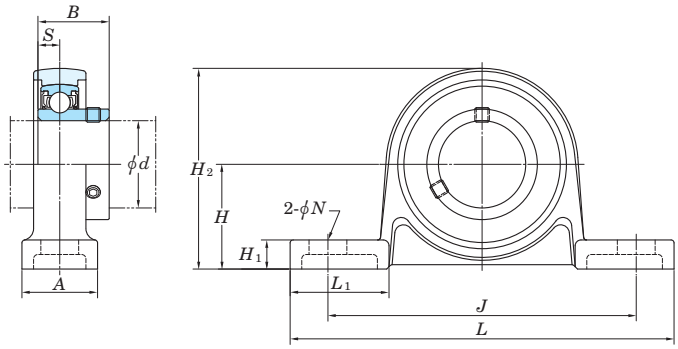

Shaft Dia. mm	Dimensions inch / mm										Bolt Size inch	Standard		
d	H	L	A	J	N	H_1	H_2	L_1	B	S	mm	Unit No.	Housing No.	Bearing No.
10	45/64 18	2 5/8 67	5/8 16	2 3/32 53	9/32 7	3/16 5	1 3/8 35	23/32 18	0.591 15	0.197 5	1/4 M6	**USP000S6**	SP000	SU000S6
12	3/4 19	2 25/32 71	5/8 16	2 7/32 56	9/32 7	3/16 5	1 15/32 37	23/32 18.5	0.591 15	0.197 5	1/4 M6	**USP001S6**	SP001	SU001S6
15	55/64 22	3 5/32 80	5/8 16	2 15/32 63	9/32 7	1/4 6	1 11/16 42.5	13/16 20.5	0.650 16.5	0.217 5.5	1/4 M6	**USP002S6**	SP002	SU002S6
17	15/16 24	3 11/32 85	23/32 18	2 5/8 67	9/32 7	1/4 6	1 13/16 46	13/16 21	0.689 17.5	0.236 6	1/4 M6	**USP003S6**	SP003	SU003S6
20	1 7/64 28	3 15/16 100	25/32 20	3 5/32 80	13/32 10	5/16 8	2 5/32 54.5	31/32 25	0.827 21	0.276 7	5/16 M8	**USP004S6**	SP004	SU004S6
25	1 17/64 32	4 13/32 112	25/32 20	3 17/32 90	13/32 10	11/32 9	2 13/32 61	1 3/32 27.5	0.866 22	0.276 7	5/16 M8	**USP005S6**	SP005	SU005S6
30	1 27/64 36	5 3/16 132	1 1/32 26	4 3/16 106	1/2 13	13/32 10	2 23/32 69	1 11/32 34	0.965 24.5	0.295 7.5	3/8 M10	**USP006S6**	SP006	SU006S6

Remarks 1. In Part No. of unit and units with covers, fitting codes follow bore diameter codes. (See **Table 10.5** in P.51.)
2. For the dimensions and forms of applicable bearings, see the dimensional tables of ball bearing for unit.

Open Ends Type

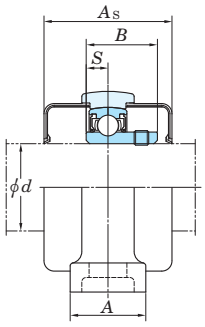

Closed End Type

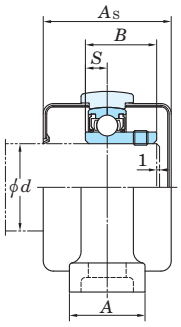

Variations of tolerance of distance from mounting bottom to center of spherical bore (Δ_{Hs}) and variations of tolerance of distance between centers of bolt holes (Δ_{Js})

Unit : mm

Housing No.	Δ_{Hs}	Δ_{Js}
SP000~SP006	±0.15	±0.3

Mass	Basic Load Ratings kN		Factor	With Rubber Coated Covers Unit No.		Dimension mm	inch	Mass
kg	C_r	C_{0r}	f_0	Open Ends Type	Closed End Type	A_s		kg
0.076	4.55	3.9	1.55	USP000CS6	USP000CDS6	29	1 5/32	0.076
0.08	5.10	4.3	1.9	USP001CS6	USP001CDS6	29	1 5/32	0.08
0.11	5.60	4.7	2.25	USP002CS6	USP002CDS6	31	1 7/32	0.11
0.14	6.00	5.1	2.6	USP003CS6	USP003CDS6	33	1 5/16	0.14
0.23	9.40	7.9	4	USP004CS6	USP004CDS6	38	1 1/2	0.23
0.28	10.1	8.5	4.65	USP005CS6	USP005CDS6	40	1 9/16	0.28
0.43	13.2	11.2	6.6	USP006CS6	USP006CDS6	44	1 23/32	0.43

SBPP
Cylindrical bore
(with set screws)
SAPP
Cylindrical bore
(with eccentric locking collar)
d 12 ~ 30 mm

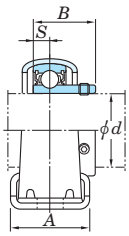

SBPP

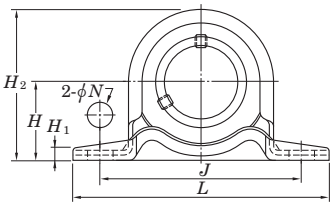

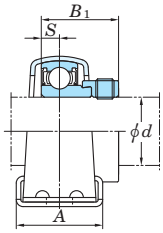

SAPP

Shaft Dia mm	Shaft Dia inch	Dimensions inch / mm										Bolt Size inch / mm	Unit No.	Bearing No.
d		H	L	A	J	N	H_1	H_2	S	SBPP B	SAPP B_1			
12													**SBPP201**	SB201
	1/2	7/8	3 3/8	31/32	2 43/64	3/8	1/8	1 23/32	0.236	0.866	1.122	5/16	**SBPP201-8**	SB201-8
15		22.2	86	25	68	9.5	3.2	43.8	6	22	28.5	M8	**SBPP202**	SB202
	5/8												**SBPP202-10**	SB202-10
17													**SBPP203**	SB203
20	3/4	1	3 27/32	1 1/4	2 63/64	3/8	1/8	2	0.276	0.984	1.161	5/16	**SBPP204-12**	SB204-12
		25.4	98	32	76	9.5	3.2	50.5	7	25	29.5	M8	**SBPP204**	SB204
	7/8												**SBPP205-14**	SB205-14
25	15/16	1 1/8	4 1/4	1 1/4	3 25/64	29/64	5/32	27/32	0.295	1.063	1.201	3/8	**SBPP205-15**	SB205-15
		28.6	108	32	86	11.5	4	56.6	7.5	27	30.5	M10	**SBPP205**	SB205
	1												**SBPP205-16**	SB205-16
	1 1/8												**SBPP206-18**	SB206-18
30		15/16	4 19/32	1 1/2	3 3/4	29/64	5/32	2 5/8	0.315	1.181	1.335	3/8	**SBPP206**	SB206
	13/16	33.3	117	38	95	11.5	4	66.3	8	30	33.9	M10	**SBPP206-19**	SB206-19
	1 1/4												**SBPP206-20**	SB206-20

Remark For the dimensions and forms of applicable bearings, see the dimensional tables of ball bearing for unit.

Variations of tolerance of distance between centers of bolt holes (Δ_{Js}) and variations of tolerance of bolt hole diameter (Δ_{Ns})

Unit : mm

Housing No.	Δ_{Js}	Δ_{Ns}
PP203~PP206	±0.4	±0.5

Unit No.	Bearing No.	Housing No.	Basic Load Ratings kN C_r	C_{0r}	Factor f_0	Mass kg SBPP	SAPP
SAPP201	SA201	PP203	9.55	4.80	13.2	0.16	0.19
SAPP201-8	SA201-8						
SAPP202	SA202						
SAPP202-10	SA202-10						
SAPP203	SA203						
SAPP204-12	SA204-12	PP204	12.8	6.65	13.2	0.23	0.23
SAPP204	SA204						
SAPP205-14	SA205-14	PP205	14.0	7.85	13.9	0.28	0.32
SAPP205-15	SA205-15						
SAPP205	SA205						
SAPP205-16	SA205-16						
SAPP206-18	SA206-18	PP206	19.5	11.3	13.9	0.47	0.50
SAPP206	SA206						
SAPP206-19	SA206-19						
SAPP206-20	SA206-20						

UCF
Cylindrical bore (with set screws)
d 12 ~ (45) mm

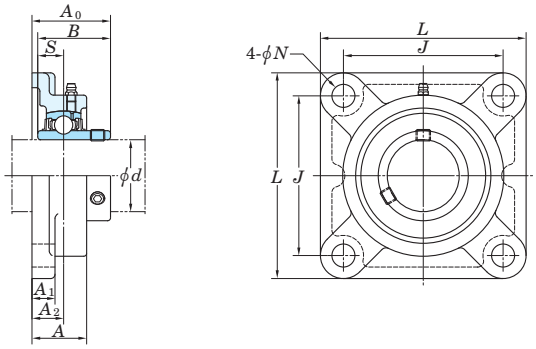

Shaft Dia. mm	Shaft Dia. inch	Dimensions inch / mm L	A	J	N	A_1	A_2	A_0	B	S	Bolt Size inch / mm	Standard Unit No.	Housing No.	Bearing No.
12	1/2	3 3/8	1	2 33/64	15/32	7/16	19/32	1 5/16	1.220	0.500	3/8	UCF201	F204	UC201
		86	25.5	64	12	11	15	33.3	31	12.7	M10	UCF201-8		UC201-8
15	5/8											UCF202		UC202
												UCF202-10		UC202-10
17	3/4											UCF203		UC203
												UCF204-12		UC204-12
20												UCF204		UC204
25	7/8	3 3/4	1 1/16	2 3/4	15/32	1/2	5/8	1 13/32	1.343	0.563	3/8	UCF205-14	F205	UC205-14
	15/16	95	27	70	12	13	16	35.8	34.1	14.3	M10	UCF205-15		UC205-15
	1											UCF205		UC205
												UCF205-16		UC205-16
	1	4 1/4	1 3/16	3 17/64	15/32	1/2	45/64	1 19/32	1.500	0.626	3/8	UCFX05	FX05	UCX05
		108	30	83	12	13	18	40.2	38.1	15.9	M10	UCFX05-16		UCX05-16
	1	4 11/32	1 5/32	3 5/32	5/8	1/2	5/8	1 17/32	1.496	0.591	1/2	UCF305	F305	UC305
		110	29	80	16	13	16	39	38	15	M14	UCF305-16		UC305-16
30	1 1/8	4 1/4	1 7/32	3 17/64	15/32	1/2	45/64	1 19/32	1.500	0.626	3/8	UCF206-18	F206	UC206-18
		108	31	83	12	13	18	40.2	38.1	15.9	M10	UCF206		UC206
	1 3/16											UCF206-19		UC206-19
	1 1/4											UCF206-20		UC206-20
	1 3/16	4 19/32	1 11/32	3 5/8	5/8	9/16	3/4	1 3/4	1.689	0.689	1/2	UCFX06	FX06	UCX06
		117	34	92	16	14	19	44.4	42.9	17.5	M14	UCFX06-19		UCX06-19
	1 1/4											UCFX06-20		UCX06-20
	–	4 29/32	1 1/4	3 47/64	5/8	19/32	45/64	1 23/32	1.693	0.669	1/2	UCF306	F306	UC306
		125	32	95	16	15	18	44	43	17	M14			
35	1 1/4	4 19/32	1 11/32	3 5/8	35/64	19/32	3/4	1 3/4	1.689	0.689	7/16	UCF207-20	F207	UC207-20
	1 5/16	117	34	92	14	15	19	44.4	42.9	17.5	M12	UCF207-21		UC207-21
	1 3/8											UCF207-22		UC207-22
												UCF207		UC207
	1 7/16											UCF207-23		UC207-23
	1 3/8	5 1/8	1 1/2	4 1/64	5/8	9/16	53/64	2 1/32	1.937	0.748	1/2	UCFX07-22	FX07	UCX07-22
		130	38	102	16	14	21	51.2	49.2	19	M14	UCFX07		UCX07
	1 7/16											UCFX07-23		UCX07-23
	–	5 5/16	1 13/32	3 15/16	3/4	5/8	25/32	1 15/16	1.890	0.748	5/8	UCF307	F307	UC307
		135	36	100	19	16	20	49	48	19	M16			
40	1 1/2	5 1/8	1 13/32	4 1/64	5/8	19/32	53/64	2 1/32	1.937	0.748	1/2	UCF208-24	F208	UC208-24
	1 9/16	130	36	102	16	15	21	51.2	49.2	19	M14	UCF208-25		UC208-25
												UCF208		UC208
	1 1/2	5 13/32	1 9/16	4 9/64	3/4	9/16	55/64	2 1/16	1.937	0.748	5/8	UCFX08-24	FX08	UCX08-24
		137	40	105	19	14	22	52.2	49.2	19	M16	UCFX08		UCX08
	1 1/2	5 29/32	1 9/16	4 13/32	3/4	21/32	29/32	2 7/32	2.047	0.748	5/8	UCF308-24	F308	UC308-24
		150	40	112	19	17	23	56	52	19	M16	UCF308		UC308
45	1 5/8	5 13/32	1 1/2	4 9/64	5/8	5/8	55/64	2 1/16	1.937	0.748	1/2	UCF209-26	F209	UC209-26
	1 11/16	137	38	105	16	16	22	52.2	49.2	19	M14	UCF209-27		UC209-27
	1 3/4											UCF209-28		UC209-28
												UCF209		UC209
	1 3/4	5 5/8	1 9/16	4 3/8	3/4	9/16	29/32	2 3/16	2.031	0.748	5/8	UCFX09-28	FX09	UCX09-28
		143	40	111	19	14	23	55.6	51.6	19	M16	UCFX09		UCX09

Remarks 1. In Part No. of unit and units with covers, fitting codes follow bore diameter numbers. (See **Table 10.5** in P.51.)
2. Part No. of applicable grease nipples are shown below.
A-1/4-28UNF ..... 201~210, X05~X09, 305~308
A-PT1/8 ..... 211~218, X10~X20, 309~328

With Pressed Steel Cover

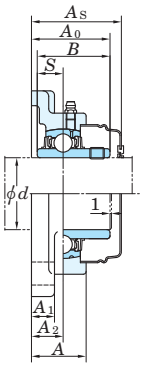

With Cast Iron Cover

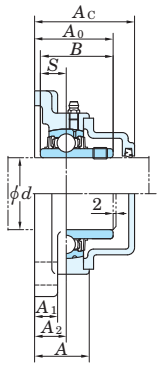

Variations of tolerance of distance from mounting surface to center of spherical bore (Δ_{A2s}) and tolerance of position of bolt hole (X)

Unit : mm

Housing No.			Δ_{A2s}	X
F204~F210	FX05~FX10	F305~F310	±0.5	0.7
F211~F218	FX11~FX20	F311~F328	±0.8	1

Variations of tolerance of bolt hole diameter (Δ_{Ns})

Unit : mm

Housing No.			Δ_{Ns}
F204~F218	FX05~FX18	F305~F315	±0.2
	FX20	F316~F328	±0.3

Mass	Basic Load Ratings kN		Factor	With Pressed Steel Cover					With Cast Iron Cover				
				Unit No.		Dimension mm	inch	Mass	Unit No.		Dimension mm	inch	Mass
kg	C_r	C_{0r}	f_0	Open End Type	Closed End Type	A_s		kg	Open End Type	Closed End Type	A_c		kg
0.64				UCF201C	UCF201D	37	1 15/32	0.64	–	–	–	–	–
0.64				–	–	–	–	–	–	–	–	–	–
0.62				UCF202C	UCF202D	37	1 15/32	0.62	–	–	–	–	–
0.62	12.8	6.65	13.2	–	–	–	–	–	–	–	–	–	–
0.61				UCF203C	UCF203D	37	1 15/32	0.61	–	–	–	–	–
0.61				–	–	–	–	–	–	–	–	–	–
0.59				UCF204C	UCF204D	37	1 15/32	0.59	UCF204FC	UCF204FD	46	1 13/16	0.74
0.83				–	–	–	–	–	–	–	–	–	–
0.83	14.0	7.85	13.9	–	–	–	–	–	–	–	–	–	–
0.83				UCF205C	UCF205D	40	1 9/16	0.83	UCF205FC	UCF205FD	49	1 15/16	1.0
0.83				–	–	–	–	–	–	–	–	–	–
1.2	19.5	11.3	13.9	UCFX05C	UCFX05D	44	1 23/32	1.2	–	–	–	–	–
1.2				–	–	–	–	–	–	–	–	–	–
1.3	21.2	10.9	12.6	–	–	–	–	–	UCF305C	UCF305D	54	2 1/8	1.6
1.3				–	–	–	–	–	–	–	–	–	–
1.1				–	–	–	–	–	–	–	–	–	–
1.1	19.5	11.3	13.9	UCF206C	UCF206D	44	1 23/32	1.1	UCF206FC	UCF206FD	53	2 3/32	1.4
1.1				–	–	–	–	–	–	–	–	–	–
1.1				–	–	–	–	–	–	–	–	–	–
1.6				UCFX06C	UCFX06D	49	1 15/16	1.6	–	–	–	–	–
1.6	25.7	15.4	13.9	–	–	–	–	–	–	–	–	–	–
1.6				–	–	–	–	–	–	–	–	–	–
1.9	26.7	15.0	13.3	–	–	–	–	–	UCF306C	UCF306D	59	2 5/16	2.2
1.5				–	–	–	–	–	–	–	–	–	–
1.5				–	–	–	–	–	–	–	–	–	–
1.5	25.7	15.4	13.9	–	–	–	–	–	–	–	–	–	–
1.5				UCF207C	UCF207D	49	1 15/16	1.5	UCF207FC	UCF207FD	58	2 9/32	1.9
1.5				–	–	–	–	–	–	–	–	–	–
2.0				–	–	–	–	–	–	–	–	–	–
2.0	29.1	17.8	14.0	UCFX07C	UCFX07D	55	2 5/32	2.0	–	–	–	–	–
2.0				–	–	–	–	–	–	–	–	–	–
2.3	33.4	19.3	13.2	–	–	–	–	–	UCF307C	UCF307D	64	2 17/32	2.7
1.9				–	–	–	–	–	–	–	–	–	–
1.9	29.1	17.8	14.0	–	–	–	–	–	–	–	–	–	–
1.9				UCF208C	UCF208D	55	2 5/32	1.9	UCF208FC	UCF208FD	64	2 17/32	2.3
2.4	34.1	21.3	14.0	–	–	–	–	–	–	–	–	–	–
2.4				UCFX08C	UCFX08D	56	2 7/32	2.4	–	–	–	–	–
3.1	40.7	24.0	13.2	–	–	–	–	–	–	–	–	–	–
3.1				–	–	–	–	–	UCF308C	UCF308D	71	2 25/32	3.6
2.2				–	–	–	–	–	–	–	–	–	–
2.2	34.1	21.3	14.0	–	–	–	–	–	–	–	–	–	–
2.2				–	–	–	–	–	–	–	–	–	–
2.2				UCF209C	UCF209D	56	2 7/32	2.2	UCF209FC	UCF209FD	66	2 19/32	2.6
2.7	35.1	23.3	14.4	–	–	–	–	–	–	–	–	–	–
2.7				UCFX09C	UCFX09D	60	2 3/8	2.7	–	–	–	–	–

3. As for the triple-lip seal type product (from 201 to 205 are the double-lip seal type products), supplementary code L3 (L2) follows the Part No. of unit or bearing. (Example of Part No. : UCF206JL3, UC206L3)
4. For the dimensions and forms of applicable bearings, see the dimensional tables of ball bearing for unit.

UCF
Cylindrical bore (with set screws)
d (45) ~ (75) mm

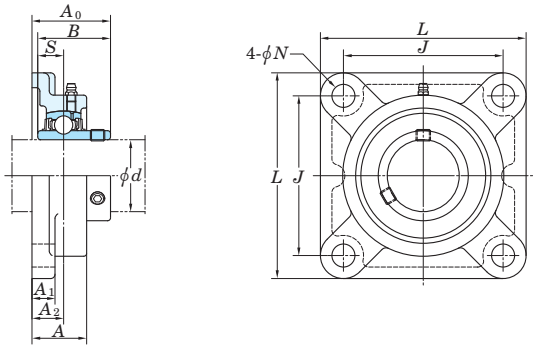

Shaft Dia. mm	Shaft Dia. inch	Dimensions inch / mm L	A	J	N	A1	A2	A0	B	S	Bolt Size inch / mm	Standard Unit No.	Housing No.	Bearing No.
45	1 3/4	6 5/16	1 23/32	4 59/64	3/4	23/32	63/64	2 3/8	2.244	0.866	5/8	UCF309-28	F309	UC309-28
		160	44	125	19	18	25	60	57	22	M16	UCF309		UC309
50	1 7/8											UCF210-30	F210	UC210-30
	1 15/16	5 5/8	1 9/16	4 3/8	5/8	5/8	55/64	2 5/32	2.031	0.748	1/2	UCF210-31		UC210-31
		143	40	111	16	16	22	54.6	51.6	19	M14	UCF210		UC210
	2											UCF210-32		UC210-32
	1 15/16	6 3/8	1 23/32	5 1/8	3/4	25/32	1 1/32	2 11/32	2.189	0.874	5/8	UCFX10-31	FX10	UCX10-31
		162	44	130	19	20	26	59.4	55.6	22.2	M16	UCFX10		UCX10
	2											UCFX10-32		UCX10-32
	–	6 7/8	1 7/8	5 13/64	29/32	3/4	1 7/64	2 5/8	2.402	0.866	3/4	UCF310	F310	UC310
		175	48	132	23	19	28	67	61	22	M20			
55	2											UCF211-32	F211	UC211-32
	2 1/8	6 3/8	1 11/16	5 1/8	3/4	23/32	63/64	2 5/16	2.189	0.874	5/8	UCF211-34		UC211-34
		162	43	130	19	18	25	58.4	55.6	22.2	M16	UCF211		UC211
	2 3/16											UCF211-35		UC211-35
		6 7/8	1 15/16	5 5/8	3/4	25/32	1 9/64	2 23/32	2.563	1.000	5/8	UCFX11	FX11	UCX11
	2 3/16	175	49	143	19	20	29	68.7	65.1	25.4	M16	UCFX11-35		UCX11-35
	2 1/4											UXPX11-36		UCX11-36
	2	7 9/32	2 1/16	5 33/64	29/32	25/32	1 3/16	2 25/32	2.598	0.984	3/4	UCF311-32	F311	UC311-32
		185	52	140	23	20	30	71	66	25	M20	UCF311		UC311
60	2 1/4											UCF212-36	F212	UC212-36
		6 7/8	1 7/8	5 5/8	3/4	23/32	1 9/64	2 23/32	2.563	1.000	5/8	UCF212		UC212
	2 3/8	175	48	143	19	18	29	68.7	65.1	25.4	M16	UCF212-38		UC212-38
	2 7/16											UCF212-39		UC212-39
		7 3/8	2 5/16	5 55/64	3/4	13/16	1 11/32	2 29/32	2.563	1.000	5/8	UCFX12	FX12	UCX12
	2 7/16	187	59	149	19	21	34	73.7	65.1	25.4	M16	UCFX12-39		UCX12-39
	–	7 11/16	2 7/32	5 29/32	29/32	7/8	1 19/64	3 1/16	2.795	1.024	3/4	UCF312	F312	UC312
		195	56	150	23	22	33	78	71	26	M20			
65	2 1/2	7 3/8	1 31/32	5 55/64	3/4	7/8	1 3/16	2 3/4	2.563	1.000	5/8	UCF213-40	F213	UC213-40
		187	50	149	19	22	30	69.7	65.1	25.4	M16	UCF213		UC213
	2 1/2	7 3/8	2 5/16	5 55/64	3/4	13/16	1 11/32	3 3/32	2.937	1.189	5/8	UCFX13-40	FX13	UCX13-40
		187	59	149	19	21	34	78.4	74.6	30.2	M16	UCFX13		UCX13
	2 1/2	8 3/16	2 9/32	6 17/32	29/32	7/8	1 19/64	3 1/16	2.953	1.181	3/4	UCF313-40	F313	UC313-40
		208	58	166	23	22	33	78	75	30	M20	UCF313		UC313
70	2 3/4	7 19/32	2 1/8	5 63/64	3/4	7/8	1 7/32	2 31/32	2.937	1.189	5/8	UCF214-44	F214	UC214-44
		193	54	152	19	22	31	75.4	74.6	30.2	M16	UCF214		UC214
	2 3/4	7 3/4	2 3/8	5 63/64	29/32	7/8	1 29/64	3 7/32	3.063	1.331	3/4	UCFX14-44	FX14	UCX14-44
		197	60	152	23	22	37	81.5	77.8	33.3	M20	UCFX14		UCX14
	2 3/4	8 29/32	2 13/32	7 1/64	63/64	31/32	1 27/64	3 3/16	3.071	1.299	7/8	UCF314-44	F314	UC314-44
		226	61	178	25	25	36	81	78	33	M22	UCF314		UC314
75	2 15/16	7 7/8	2 7/32	6 17/64	3/4	7/8	1 11/32	3 3/32	3.063	1.311	5/8	UCF215-47	F215	UC215-47
		200	56	159	19	22	34	78.5	77.8	33.3	M16	UCF215		UC215
	3											UCF215-48		UC215-48
	2 15/16	7 3/4	2 11/16	5 63/64	29/32	15/16	1 9/16	3 17/32	3.252	1.311	3/4	UCFX15-47	FX15	UCX15-47
		197	68	152	23	24	40	89.3	82.6	33.3	M20	UCFX15		UCX15
	3											UCFX15-48		UCX15-48

Remarks 1. In Part No. of unit and units with covers, fitting codes follow bore diameter numbers. (See **Table 10.5** in P.51.)
2. Part No. of applicable grease nipples are shown below.
A-1/4-28UNF ..... 201~210, X05~X09, 305~308
A-PT1/8 ..... 211~218, X10~X20, 309~328

With Pressed Steel Cover

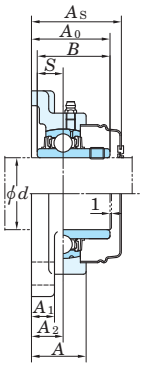

With Cast Iron Cover

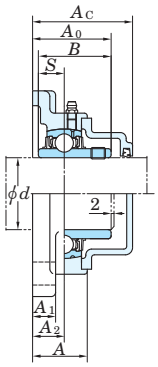

Variations of tolerance of distance from mounting surface to center of spherical bore (Δ_{A2s}) and tolerance of position of bolt hole (X)

Unit : mm

Housing No.			Δ_{A2s}	X
F204~F210	FX05~FX10	F305~F310	±0.5	0.7
F211~F218	FX11~FX20	F311~F328	±0.8	1

Variations of tolerance of bolt hole diameter (Δ_{Ns})

Unit : mm

Housing No.			Δ_{Ns}
F204~F218	FX05~FX18	F305~F315	±0.2
	FX20	F316~F328	±0.3

Mass	Basic Load Ratings kN		Factor	With Pressed Steel Cover					With Cast Iron Cover				
				Unit No.		Dimension mm	inch	Mass	Unit No.		Dimension mm	inch	Mass
kg	C_r	C_{0r}	f_0	Open End Type	Closed End Type	A_s		kg	Open End Type	Closed End Type	A_c		kg
4.0	48.9	29.5	13.3	–	–	–	–	–	–	–	–	–	–
4.0				–	–	–	–	–	UCF309C	UCF309D	76	3	4.6
2.5	35.1	23.3	14.4	–	–	–	–	–	–	–	–	–	–
2.5				–	–	–	–	–	–	–	–	–	–
2.5				UCF210C	UCF210D	59	2 5/16	2.5	UCF210FC	UCF210FD	70.5	2 25/32	3.0
2.5				–	–	–	–	–	–	–	–	–	–
3.7	43.4	29.4	14.4	–	–	–	–	–	–	–	–	–	–
3.7				UCFX10C	UCFX10D	64	2 17/32	3.7	–	–	–	–	–
3.7				–	–	–	–	–	–	–	–	–	–
5.1	62.0	38.3	13.2	–	–	–	–	–	UCF310C	UCF310D	83	3 9/32	5.9
3.4	43.4	29.4	14.4	–	–	–	–	–	–	–	–	–	–
3.4				–	–	–	–	–	–	–	–	–	–
3.4				UCF211C	UCF211D	63	2 15/32	3.4	UCF211FC	UCF211FD	74.5	2 15/16	4.0
3.4				–	–	–	–	–	–	–	–	–	–
4.9	52.4	36.2	14.4	UCFX11C	UCFX11D	73	2 7/8	4.9	–	–	–	–	–
4.9				–	–	–	–	–	–	–	–	–	–
4.9				–	–	–	–	–	–	–	–	–	–
5.6	71.6	45.0	13.2	–	–	–	–	–	–	–	–	–	–
5.6				–	–	–	–	–	UCF311C	UCF311D	87	3 7/16	6.5
4.2	52.4	36.2	14.4	–	–	–	–	–	–	–	–		–
4.2				UCF212C	UCF212D	73	2 7/8	4.2	UCF212FC	UCF212FD	86	3 3/8	5.0
4.2				–	–	–	–	–	–	–	–	–	–
4.2				–	–	–	–	–	–	–	–	–	–
5.7	57.2	40.1	14.4	UCFX12C	UCFX12D	78	3 1/16	5.7	–	–	–	–	–
5.7				–	–	–	–	–	–	–	–	–	–
6.9	81.9	52.2	13.2	–	–	–	–	–	UCF312C	UCF312D	95	3 3/4	8.1
5.2	57.2	40.1	14.4	–	–	–	–	–	–	–	–	–	–
5.2				UCF213C	UCF213D	74	2 29/32	5.2	UCF213FC	UCF213FD	87	3 7/16	6.0
6.3	62.2	44.1	14.5	–	–	–	–	–	–	–	–	–	–
6.3				UCFX13C	UCFX13D	83	3 9/32	6.3	–	–	–	–	–
7.8	92.7	59.9	13.2	–	–	–	–	–	–	–	–	–	–
7.8				–	–	–	–	–	UCF313C	UCF313D	94	3 11/16	8.9
5.9	62.2	44.1	14.5	–	–	–	–	–	–	–	–		–
5.9				UCF214C	UCF214D	80	3 5/32	5.9	UCF214FC	UCF214FD	93	3 21/32	6.8
7.0	67.4	48.3	14.5	–	–	–	–	–	–	–	–	–	–
7.0				UCFX14C	UCFX14D	86	3 3/8	7.0	–	–	–	–	–
10.1	104	68.2	13.2	–	–	–	–	–	–	–	–	–	–
10.1				–	–	–	–	–	UCF314C	UCF314D	98	3 27/32	11.2
6.4	67.4	48.3	14.5	–	–	–	–	–	–	–	–	–	–
6.4				UCF215C	UCF215D	83	3 9/32	6.4	UCF215FC	UCF215FD	96	3 25/32	7.4
6.4				–	–	–	–	–	–	–	–	–	–
8.4	72.7	53.0	14.6	–	–	–	–	–	–	–	–	–	–
8.4				UCFX15C	UCFX15D	94	3 11/16	8.4	–	–	–	–	–
8.4				–	–	–	–	–	–	–	–	–	–

3. As for the triple-lip seal type product (from 201 to 205 are the double-lip seal type products), supplementary code L3 (L2) follows the Part No. of unit or bearing. (Example of Part No. : UCF206JL3, UC206L3)
4. For the dimensions and forms of applicable bearings, see the dimensional tables of ball bearing for unit.

UCF
Cylindrical bore (with set screws)
d (75) ~ 140 mm

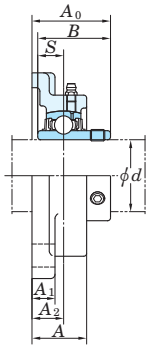

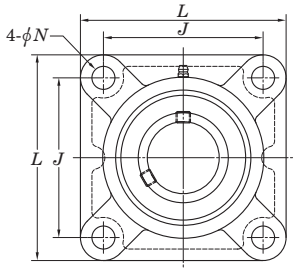

Shaft Dia. mm	Shaft Dia. inch	Dimensions inch / mm L	A	J	N	A_1	A_2	A_0	B	S	Bolt Size inch / mm	Standard Unit No.	Housing No.	Bearing No.
75	2 15/16	9 9/32	2 19/32	7 1/4	63/64	31/32	1 17/32	3 1/2	3.228	1.260	7/8	UCF315-47	F315	UC315-47
		236	66	184	25	25	39	89	82	32	M22	UCF315		UC315
	3											UCF315-48		UC315-48
80	3 1/8	8 3/16	2 9/32	6 1/2	29/32	7/8	1 11/32	3 9/32	3.252	1.311	3/4	UCF216-50	F216	UC216-50
		208	58	165	23	22	34	83.3	82.6	33.3	M20	UCF216		UC216
	–	8 7/16	2 3/4	6 47/64	29/32	15/16	1 9/16	3 19/32	3.374	1.343	3/4	UCFX16	FX16	UCX16
		214	70	171	23	24	40	91.6	85.7	34.1	M20			
	–	9 27/32	2 11/16	7 23/32	1 7/32	1 1/16	1 1/2	3 17/32	3.386	1.339	1	UCF316	F316	UC316
		250	68	196	31	27	38	90	86	34	M27			
85	3 1/4	8 21/32	2 15/32	6 57/64	29/32	15/16	1 13/32	3 7/16	3.374	1.343	3/4	UCF217-52	F217	UC217-52
		220	63	175	23	24	36	87.6	85.7	34.1	M20	UCF217		UC217
	3 7/16	8 7/16	2 3/4	6 47/64	29/32	15/16	1 9/16	3 25/32	3.780	1.563	3/4	UCFX17	FX17	UCX17
		214	70	171	23	24	40	96.3	96	39.7	M20	UCFX17-55		UCX17-55
	–	10 1/4	2 29/32	8 1/32	1 7/32	1 1/16	1 47/64	3 15/16	3.780	1.575	1	UCF317	F317	UC317
		260	74	204	31	27	44	100	96	40	M27			
90	3 1/2	9 1/4	2 11/16	7 23/64	29/32	31/32	1 9/16	3 25/32	3.780	1.563	3/4	UCF218-56	F218	UC218-56
		235	68	187	23	25	40	96.3	96	39.7	M20	UCF218		UC218
	–	8 7/16	3	6 47/64	29/32	15/16	1 49/64	4 3/16	4.094	1.689	3/4	UCFX18	FX18	UCX18
		214	76	171	23	24	45	106.1	104	42.9	M20			
	3 1/2	11 1/32	3	8 1/2	1 3/8	1 3/16	1 47/64	3 15/16	3.780	1.575	1 1/8	UCF318-56	F318	UC318-56
		280	76	216	35	30	44	100	96	40	M30	UCF318		UC318
95	–	11 13/32	3 11/16	8 31/32	1 3/8	1 3/16	2 21/64	4 3/4	4.055	1.614	1 1/8	UCF319	F319	UC319
		290	94	228	35	30	59	121	103	41	M30			
100	3 15/16	10 9/16	3 13/16	8 5/16	1 7/32	1 3/32	2 21/64	5	4.626	1.937	1	UCFX20	FX20	UCX20
		268	97	211	31	28	59	127.3	117.5	49.2	M27	UCFX20-63		UCX20-63
	4											UCFX20-64		UCX20-64
	3 15/16	12 7/32	3 11/16	9 17/32	1 1/2	1 1/4	2 21/64	4 29/32	4.252	1.654	1 1/4	UCF320	F320	UC320
		310	94	242	38	32	59	125	108	42	M33	UCF320-63		UC320-63
	4											UCF320-64		UC320-64
105	–	12 7/32	3 11/16	9 17/32	1 1/2	1 1/4	2 21/64	5	4.409	1.732	1 1/4	UCF321	F321	UC321
		310	94	242	38	32	59	127	112	44	M33			
110	–	13 3/8	3 25/32	10 15/32	1 39/64	1 3/8	2 23/64	5 5/32	4.606	1.811	1 3/8	UCF322	F322	UC322
		340	96	266	41	35	60	131	117	46	M36			
120	–	14 9/16	4 11/32	11 27/64	1 39/64	1 9/16	2 9/16	5 1/2	4.961	2.008	1 3/8	UCF324	F324	UC324
		370	110	290	41	40	65	140	126	51	M36			
130	–	16 5/32	4 17/32	12 19/32	1 39/64	1 25/32	2 9/16	5 3/4	5.315	2.126	1 3/8	UCF326	F326	UC326
		410	115	320	41	45	65	146	135	54	M36			
140	–	17 23/32	4 29/32	13 25/32	1 39/64	2 5/32	2 61/64	6 11/32	5.709	2.323	1 3/8	UCF328	F328	UC328
		450	125	350	41	55	75	161	145	59	M36			

Remarks 1. In Part No. of unit and units with covers, fitting codes follow bore diameter numbers. (See **Table 10.5** in P.51.)
2. Part No. of applicable grease nipples are shown below.
A-1/4-28UNF ..... 201~210, X05~X09, 305~308
A-PT1/8 ..... 211~218, X10~X20, 309~328

With Pressed Steel Cover

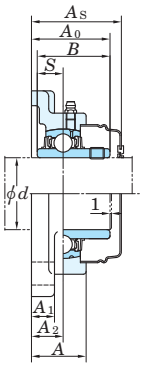

With Cast Iron Cover

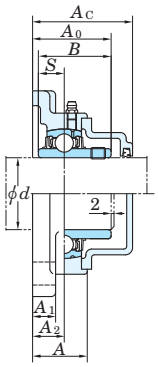

Variations of tolerance of distance from mounting surface to center of spherical bore (Δ_{A2s}) and tolerance of position of bolt hole (X)

Unit : mm

Housing No.			Δ_{A2s}	X
F204~F210	FX05~FX10	F305~F310	±0.5	0.7
F211~F218	FX11~FX20	F311~F328	±0.8	1

Variations of tolerance of bolt hole diameter (Δ_{Ns})

Unit : mm

Housing No.			Δ_{Ns}
F204~F218	FX05~FX18	F305~F315	±0.2
	FX20	F316~F328	±0.3

Mass	Basic Load Ratings kN		Factor	With Pressed Steel Cover					With Cast Iron Cover				
				Unit No.		Dimension mm	inch	Mass	Unit No.		Dimension mm	inch	Mass
kg	C_r	C_{0r}	f_0	Open End Type	Closed End Type	A_s		kg	Open End Type	Closed End Type	A_c		kg
11.6				–	–	–	–	–	–	–	–	–	–
11.6	113	77.2	13.2	–	–	–	–	–	UCF315C	UCF315D	106	4 3/16	12.9
11.6				–	–	–	–	–	–	–	–	–	–
7.3	72.7	53.0	14.6	–	–	–	–	–	–	–	–	–	–
7.3				UCF216C	UCF216D	88	3 15/32	7.3	UCF216FC	UCF216FD	103	4 1/16	8.5
9.4	84.0	61.9	14.5	UCFX16C	UCFX16D	96	3 25/32	9.4	–	–	–	–	–
12.8	123	86.7	13.3	–	–	–	–	–	UCF316C	UCF316D	107	4 7/32	14.2
8.9	84.0	61.9	14.5	–	–	–	–	–	–	–	–	–	–
8.9				UCF217C	UCF217D	92	3 5/8	8.9	UCF217FC	UCF217FD	107	4 7/32	10.3
10.8	96.1	71.5	14.5	UCFX17C	UCFX17D	101	3 31/32	10.8	–	–	–	–	–
10.8				–	–	–	–	–	–	–	–	–	–
15.3	133	96.8	13.3	–	–	–	–	–	UCF317C	UCF317D	117	4 19/32	16.9
11.4	96.1	71.5	14.5	–	–	–	–	–	–	–	–	–	–
11.4				UCF218C	UCF218D	101	3 31/32	11.4	UCF218FC	UCF218FD	116	4 9/16	12.9
11.9	109	81.9	14.4	–	–	–	–	–	UCFX18C	UCFX18C	124	4 7/8	13.6
18.9	143	107	13.3	–	–	–	–	–	–	–	–	–	–
18.9				–	–	–	–	–	UCF318C	UCF318D	119	4 11/16	20.8
21.6	153	119	13.3	–	–	–	–	–	UCF319C	UCF319D	140	5 1/2	23.8
19.4				–	–	–	–	–	UCFX20C	UCFX20D	152	5 31/32	21.6
19.4	133	105	14.4	–	–	–	–	–	–	–	–	–	–
19.4				–	–	–	–	–	–	–	–	–	–
25.8				–	–	–	–	–	UCF320C	UCF320D	146	5 3/4	28.6
25.8	173	141	13.2	–	–	–	–	–	–	–	–	–	–
25.8				–	–	–	–	–	–	–	–	–	–
30.2	184	153	13.2	–	–	–	–	–	UCF321C	UCF321D	148	5 13/16	33.2
35.3	205	180	13.2	–	–	–	–	–	UCF322C	UCF322D	154	6 1/16	41.7
47.3	207	185	13.5	–	–	–	–	–	UCF324C	UCF324D	163	6 13/32	52.1
65.5	229	214	13.6	–	–	–	–	–	UCF326C	UCF326D	172	6 25/32	71.6
93.4	253	246	13.6	–	–	–	–	–	UCF328C	UCF328D	186	7 5/16	101

3. As for the triple-lip seal type product (from 201 to 205 are the double-lip seal type products), supplementary code L3 (L2) follows the Part No. of unit or bearing. (Example of Part No. : UCF206JL3, UC206L3)
4. For the dimensions and forms of applicable bearings, see the dimensional tables of ball bearing for unit.

UCF-E
Cylindrical bore (with set screws)
d 12 ~ 55 mm

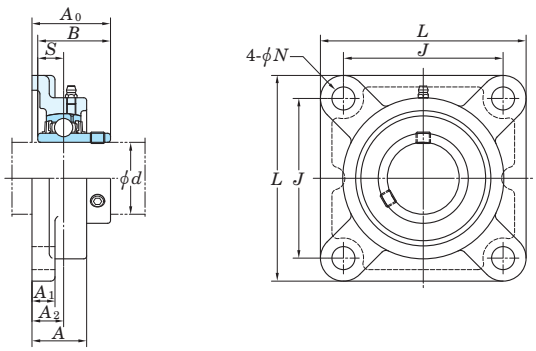

Shaft Dia. mm	Shaft Dia. inch	Dimensions inch / mm L	A	J	N	A1	A2	A0	B	S	Bolt Size inch	Unit No.	Housing No.	Bearing No.
12	1/2	3 3/8 86	1 25.5	2 33/64 64	7/16 11	7/16 11	19/32 15	1 5/16 33.3	1.220 31	0.500 12.7	3/8	UCF201E UCF201-8E	F204E	UC201 UC201-8
15	5/8											UCF202E UCF202-10E		UC202 UC202-10
17	3/4											UCF203E UCF204-12E		UC203 UC204-12
20												UCF204E		UC204
25	7/8	3 3/4 95	1 1/16 27	2 3/4 70	29/64 11.5	1/2 13	5/8 16	1 13/32 35.8	1.343 34.1	0.563 14.3	3/8	UCF205-14E UCF205-15E	F205E	UC205-14 UC205-15
	15/16											UCF205E		UC205
	1											UCF205-16E		UC205-16
	1	4 1/4 108	1 3/16 30	3 17/64 83	29/64 11.5	1/2 13	45/64 18	1 19/32 40.2	1.500 38.1	0.626 15.9	3/8	UCFX05E UCFX05-16E	FX05E	UCX05 UCX05-16
30	1 1/8	4 1/4 108	1 7/32 31	3 17/64 83	33/64 13	1/2 13	45/64 18	1 19/32 40.2	1.500 38.1	0.626 15.9	7/16	UCF206-18E UCF206E	F206E	UC206-18 UC206
	1 3/16											UCF206-19E		UC206-19
	1 1/4											UCF206-20E		UC206-20
	1 3/16 1 1/4	4 19/32 117	1 11/32 34	3 5/8 92	33/64 13	9/16 14	3/4 19	1 3/4 44.4	1.689 42.9	0.689 17.5	7/16	UCFX06E UCFX06-19E UCFX06-20E	FX06E	UCX06 UCX06-19 UCX06-20
35	1 1/4 1 5/16 1 3/8	4 19/32 117	1 11/32 34	3 5/8 92	33/64 13	19/32 15	3/4 19	1 3/4 44.4	1.689 42.9	0.689 17.5	7/16	UCF207-20E UCF207-21E UCF207-22E UCF207E	F207E	UC207-20 UC207-21 UC207-22 UC207
	1 7/16											UCF207-23E		UC207-23
	1 3/8 1 7/16	5 1/8 130	1 1/2 38	4 1/64 102	33/64 13	9/16 14	53/64 21	2 1/32 51.2	1.937 49.2	0.748 19	7/16	UCFX07-22E UCFX07E UCFX07-23E	FX07E	UCX07-22 UCX07 UCX07-23
40	1 1/2 1 9/16	5 1/8 130	1 13/32 36	4 1/64 102	35/64 14	19/32 15	53/64 21	2 1/32 51.2	1.937 49.2	0.748 19	1/2	UCF208-24E UCF208-25E UCF208E	F208E	UC208-24 UC208-25 UC208
	1 1/2	5 13/32 137	1 9/16 40	4 9/64 105	19/32 15	9/16 14	55/64 22	2 1/16 52.2	1.937 49.2	0.748 19	1/2	UCFX08-24E UCFX08E	FX08E	UCX08-24 UCX08
45	1 3/4	5 5/8 143	1 9/16 40	4 3/8 111	19/32 15	9/16 14	29/32 23	2 3/16 55.6	2.031 51.6	0.748 19	1/2	UCFX09-28E UCFX09E	FX09E	UCX09-28 UCX09
50	1 15/16	6 3/8 162	1 23/32 44	5 1/8 130	21/32 16.5	25/32 20	1 1/32 26	2 11/32 59.4	2.189 55.6	0.874 22.2	9/16	UCFX10-31E UCFX10E	FX10E	UCX10-31 UCX10
	2											UCFX10-32E		UCX10-32
55	2 2 1/8	6 3/8 162	1 11/16 43	5 1/8 130	43/64 17	23/32 18	63/64 25	2 5/16 58.4	2.189 55.6	0.874 22.2	5/8	UCF211-32E UCF211-34E UCF211E	F211E	UC211-32 UC211-34 UC211
	2 3/16											UCF211-35E		UC211-35
	2 3/16 2 1/4	6 7/8 175	1 15/16 49	5 5/8 143	21/32 16.5	25/32 20	1 9/64 29	2 23/32 68.7	2.563 65.1	1.000 25.4	9/16	UCFX11E UCFX11-35E UCFX11-36E	FX11E	UCX11 UCX11-35 UCX11-36

Remarks 1. In Part No. of unit, fitting codes follow bore diameter numbers. (See **Table 10.5** in P.51.)
2. Part No. of applicable grease nipples are shown below.
A-1/4-28UNF ..... 201~208, X05~X09
A-PT1/8 ..... 211~217, X10~X17

Variations of tolerance of distance from mounting surface to center of spherical bore (Δ_{A2s}) and tolerance of position of bolt hole (X)

Unit : mm

Housing No.		Δ_{A2s}	X
F204E~F210E	FX05E~FX10E	±0.5	0.7
F211E~F217E	FX11E~FX17E	±0.8	1

Variations of tolerance of bolt hole diameter (Δ_{Ns})

Unit : mm

Housing No.		Δ_{Ns}
F204E~F217E	FX05E~FX17E	±0.2

Basic Load Ratings kN		Factor	Mass
C_r	C_{0r}	f_0	kg
12.8	6.65	13.2	0.64 0.62 0.61 0.59
14.0	7.85	13.9	0.83
19.5	11.3	13.9	1.2
19.5	11.3	13.9	1.1
25.7	15.4	13.9	1.6
25.7	15.4	13.9	1.5
29.1	17.8	14.0	2.0
29.1	17.8	14.0	1.9
34.1	21.3	14.0	2.4
35.1	23.3	14.4	2.7
43.4	29.4	14.4	3.7
43.4	29.4	14.4	3.4
52.4	36.2	14.4	4.9

3. As for the triple-lip seal type product (from 201 to 205 are the double-lip seal type products), supplementary code L3 (L2) follows the Part No. of unit or bearing. (Example of Part No. : UCF206EJL3, UC206L3)
4. For the dimensions and forms of applicable bearings, see the dimensional tables of ball bearing for unit.

UCF-E
Cylindrical bore (with set screws)
d 60 ~ 85 mm

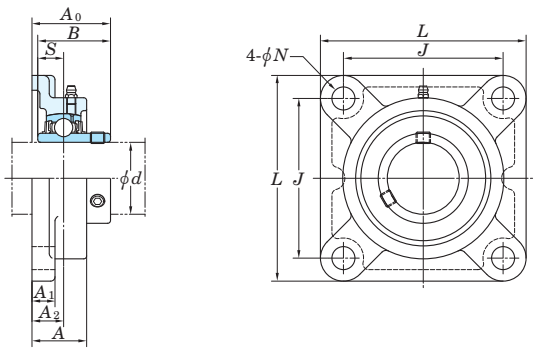

Shaft Dia. mm	Shaft Dia. inch	Dimensions inch / mm									Bolt Size inch	Unit No.	Housing No.	Bearing No.
d		L	A	J	N	A_1	A_2	A_0	B	S				
60	2 1/4	6 7/8	1 7/8	5 5/8	43/64	23/32	1 9/64	2 23/32	2.563	1.000	5/8	**UCF212-36E**	F212E	UC212-36
		175	48	143	17	18	29	68.7	65.1	25.4		**UCF212E**		UC212
	2 3/8											**UCF212-38E**		UC212-38
	2 7/16											**UCF212-39E**		UC212-39
		7 3/8	2 5/16	5 55/64	21/32	13/16	1 11/32	2 29/32	2.563	1.000	9/16	**UCFX12E**	FX12E	UCX12
	2 7/16	187	59	149	16.5	21	34	73.7	65.1	25.4		**UCFX12-39E**		UCX12-39
65	2 1/2	7 3/8	1 31/32	5 55/64	43/64	7/8	1 3/16	2 3/4	2.563	1.000	5/8	**UCF213-40E**	F213E	UC213-40
		187	50	149	17	22	30	69.7	65.1	25.4		**UCF213E**		UC213
	2 1/2	7 3/8	1 31/32	5 55/64	21/32	13/16	1 11/32	3 3/32	2.937	1.189	9/16	**UCFX13-40E**	FX13E	UCX13-40
		187	59	149	16.5	21	34	78.4	74.6	30.2		**UCFX13E**		UCX13
70	2 3/4	7 3/4	2 3/8	5 63/64	25/32	7/8	1 29/64	3 7/32	3.063	1.331	11/16	**UCFX14-44E**	FX14E	UCX14-44
		197	60	152	20	22	37	81.5	77.8	33.3		**UCFX14E**		UCX14
75	2 15/16	7 3/4	2 11/16	5 63/64	25/32	15/16	1 9/16	3 17/32	3.252	1.311	11/16	**UCFX15-47E**	FX15E	UCX15-47
		197	68	152	20	24	40	89.3	82.6	33.3		**UCFX15E**		UCX15
	3											**UCFX15-48E**		UCX15-48
80	3 1/8	8 3/16	2 9/32	6 1/2	3/4	7/8	1 11/32	3 9/32	3.252	1.311	11/16	**UCF216-50E**	F216E	UC216-50
		208	58	165	19	22	34	83.3	82.6	33.3		**UCF216E**		UC216
	–	8 7/16	2 3/4	6 47/64	25/32	15/16	1 9/16	3 19/32	3.374	1.343	11/16	**UCFX16E**	FX16E	UCX16
		214	70	171	20	24	40	91.6	85.7	34.1				
85	3 1/4	8 21/32	2 15/32	6 57/64	3/4	15/16	1 13/32	3 7/16	3.374	1.343	11/16	**UCF217-52E**	F217E	UC217-52
		220	63	175	19	24	36	87.6	85.7	34.1		**UCF217E**		UC217
	3 7/16	8 7/16	2 3/4	6 47/64	25/32	15/16	1 9/16	3 25/32	3.780	1.563	11/16	**UCFX17E**	FX17E	UCX17
		214	70	171	20	24	40	96.3	96	39.7		**UCFX17-55E**		UCX17-55

Remarks 1. In Part No. of unit, fitting codes follow bore diameter numbers. (See **Table 10.5** in P.51.)
2. Part No. of applicable grease nipples are shown below.
A-1/4-28UNF ..... 201~208, X05~X09
A-PT1/8 ..... 211~217, X10~X17

Variations of tolerance of distance from mounting surface to center of spherical bore (Δ_{A2s}) and tolerance of position of bolt hole (X)

Unit : mm

Housing No.		Δ_{A2s}	X
F204E~F210E	FX05E~FX10E	±0.5	0.7
F211E~F217E	FX11E~FX17E	±0.8	1

Variations of tolerance of bolt hole diameter (Δ_{Ns})

Unit : mm

Housing No.		Δ_{Ns}
F204E~F217E	FX05E~FX17E	±0.2

Basic Load Ratings kN		Factor	Mass
C_r	C_{0r}	f_0	kg
52.4	36.2	14.4	4.2
57.2	40.1	14.4	5.7
57.2	40.1	14.4	5.2
62.2	44.1	14.5	6.3
67.4	48.3	14.5	7.0
72.7	53.0	14.6	8.4
72.7	53.0	14.6	7.3
84.0	61.9	14.5	9.4
84.0	61.9	14.5	8.9
96.1	71.5	14.5	10.8

3. As for the triple-lip seal type product (from 201 to 205 are the double-lip seal type products), supplementary code L3 (L2) follows the Part No. of unit or bearing. (Example of Part No. : UCF206EJL3, UC206L3)
4. For the dimensions and forms of applicable bearings, see the dimensional tables of ball bearing for unit.

NANF
Cylindrical bore
(with eccentric locking collar)
d 12 ~ 60 mm

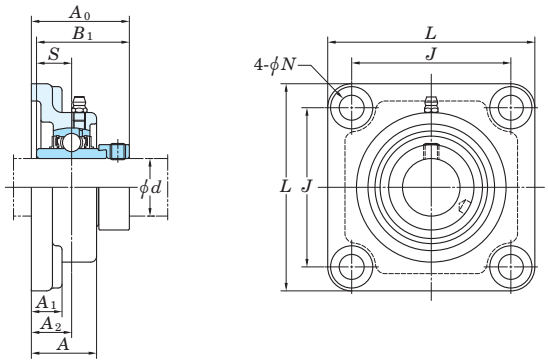

Shaft Dia mm	Shaft Dia inch	Dimensions inch / mm L	A	J	N	A_1	A_2	A_0	B_1	S	Bolt Size inch	Unit No.	Housing No.	Bearing No.
12												NANF201		NA201
	1/2											NANF201-8		NA201-8
15												NANF202		NA202
	5/8	3 3/8 86	1 5/32 29.5	2 33/64 64	7/16 11	19/32 15	3/4 19	1 25/32 45.6	1.720 43.7	0.673 17.1	3/8	NANF202-10	NF204	NA202-10
17												NANF203		NA203
	3/4											NANF204-12		NA204-12
20												NANF204		NA204
	7/8											NANF205-14		NA205-14
25	15/16	3 3/4 95	1 7/32 31	2 3/4 70	29/64 11.5	19/32 15	25/32 20	1 27/32 46.9	1.748 44.4	0.689 17.5	3/8	NANF205-15	NF205	NA205-15
	1											NANF205		NA205
												NANF205-16		NA205-16
	1 1/8											NANF206-18		NA206-18
30		4 1/4 108	1 11/32 34	3 17/64 83	33/64 13	5/8 16	53/64 21	2 51.1	1.906 48.4	0.720 18.3	7/16	NANF206	NF206	NA206
	1 3/16											NANF206-19		NA206-19
	1 1/4											NANF206-20		NA206-20
	1 1/4											NANF207-20		NA207-20
	1 5/16											NANF207-21		NA207-21
35	1 3/8	4 19/32 117	1 7/16 36.5	3 5/8 92	33/64 13	21/32 17	27/32 21.5	2 1/8 53.8	2.012 51.1	0.740 18.8	7/16	NANF207-22	NF207	NA207-22
												NANF207		NA207
	1 7/16											NANF207-23		NA207-23
	1 1/2											NANF208-24		NA208-24
40	1 9/16	5 1/8 130	1 17/32 39	4 1/64 102	35/64 14	21/32 17	15/16 24	2 5/16 58.9	2.217 56.3	0.843 21.4	1/2	NANF208-25	NF208	NA208-25
												NANF208		NA208
	1 5/8											NANF209-26		NA209-26
45	1 11/16	5 13/32 137	1 9/16 40	4 9/64 105	5/8 16	23/32 18	15/16 24	2 5/16 58.9	2.217 56.3	0.843 21.4	9/16	NANF209-27	NF209	NA209-27
	1 3/4											NANF209-28		NA209-28
												NANF209		NA209
	1 7/8											NANF210-30		NA210-30
50	1 15/16	5 5/8 143	1 27/32 46.5	4 3/8 111	5/8 16	25/32 20	1 1/8 28.5	2 5/8 66.6	2.469 62.7	0.969 24.6	9/16	NANF210-31	NF210	NA210-31
												NANF210		NA210
	2											NANF210-32		NA210-32
	2											NANF211-32		NA211-32
55	2 1/8	6 3/8 162	1 31/32 50	5 1/8 130	43/64 17	13/16 21	1 17/64 32	2 31/32 75.6	2.811 71.4	1.094 27.8	5/8	NANF211-34	NF211	NA211-34
												NANF211		NA211
	2 3/16											NANF211-35		NA211-35
	2 1/4											NANF212-36		NA212-36
60		6 7/8 175	2 5/32 55	5 5/8 143	43/64 17	13/16 21	1 27/64 36	3 1/4 82.8	3.063 77.8	1.220 31	5/8	NANF212	NF212	NA212
	2 3/8											NANF212-38		NA212-38
	2 7/16											NANF212-39		NA212-39

Remarks 1. In Part No. of unit and units with covers, fitting codes follow bore diameter numbers. (See **Table 10.5** in P.51.)
2. Part No. of applicable grease nipples are shown below.
A-1/4-28UNF ..... 201~210
A-PT1/8 ..... 211~212

Variations of tolerance of distance from mounting surface to center of spherical bore (Δ_{A2s}) and tolerance of position of bolt hole (X)

Unit : mm

Housing No.	Δ_{A2s}	X
NF204~NF210	±0.5	0.7
NF211~NF212	±0.8	1

Variations of tolerance of bolt hole diameter (Δ_{Ns})

Unit : mm

Housing No.	Δ_{Ns}
NF204~NF212	±0.2

	Basic Load Ratings kN		Factor	Mass
	C_r	C_{0r}	f_0	kg
	12.8	6.65	13.2	0.73
	14.0	7.85	13.9	0.95
	19.5	11.3	13.9	1.4
	25.7	15.4	13.9	1.8
	29.1	17.8	14.0	2.2
	34.1	21.3	14.0	2.6
	35.1	23.3	14.4	3
	43.4	29.4	14.4	4.1
	52.4	36.2	14.4	4.9

3. For the dimensions and forms of applicable bearings, see the dimensional tables of ball bearing for unit.

UKF
Tapered bore (with adapter)
d_1 20 ~ (50) mm

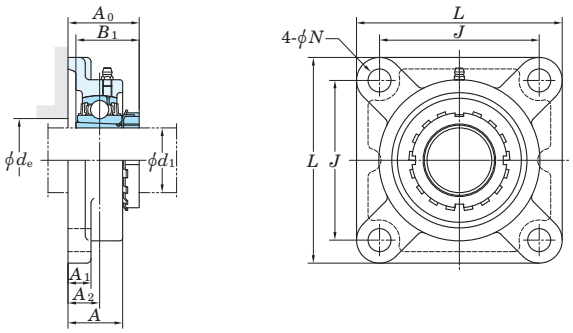

Shaft Dia. mm	Shaft Dia. inch	Dimensions inch / mm									Bolt Size inch / mm	Standard Unit No.	Housing No.	Bearing No.
d_1		L	A	J	N	A_1	A_2	A_0 1)	B_1 1)	d_e (min.)				
20	3/4	3 3/4 95	1 1/16 27	2 3/4 70	15/32 12	1/2 13	5/8 16	1 11/32(1 13/32) 34.5(36)	1 5/32(1 3/8) 29(35)	1 3/16 30	3/8 M10	**UKF205**	F205	UK205
	3/4	4 1/4 108	1 3/16 30	3 17/64 83	15/32 12	1/2 13	45/64 18	1 15/32 37.5	1 3/8 35	1 3/16 30	3/8 M10	**UKFX05**	FX05	UKX05
	3/4	4 11/32 110	1 5/32 29	3 5/32 80	5/8 16	1/2 13	5/8 16	1 15/32 37.5	1 3/8 35	– –	1/2 M14	**UKF305**	F305	UK305
25	1	4 1/4 108	1 7/32 31	3 17/64 83	15/32 12	1/2 13	45/64 18	1 15/32(1 9/16) 37.5(39.5)	1 7/32(1 1/2) 31(38)	1 13/32 36	3/8 M10	**UKF206**	F206	UK206
	1	4 19/32 117	1 11/32 34	3 5/8 92	5/8 16	9/16 14	3/4 19	1 9/16 40	1 1/2 38	1 13/32 36	1/2 M14	**UKFX06**	FX06	UKX06
	1	4 29/32 125	1 1/4 32	3 47/64 95	5/8 16	19/32 15	45/64 18	1 5/8 41	1 1/2 38	– –	1/2 M14	**UKF306**	F306	UK306
30	1 1/8	4 19/32 117	1 11/32 34	3 5/8 92	35/64 14	19/32 15	3/4 19	1 5/8(1 11/16) 41(43)	1 3/8(1 11/16) 35(43)	1 5/8 41	7/16 M12	**UKF207**	F207	UK207
	1 1/8	5 1/8 130	1 1/2 38	4 1/64 102	5/8 16	9/16 14	53/64 21	1 23/32 43.5	1 11/16 43	1 5/8 41	1/2 M14	**UKFX07**	FX07	UKX07
	1 1/8	5 5/16 135	1 13/32 36	3 15/16 100	3/4 19	5/8 16	25/32 20	1 25/32 45.5	1 11/16 43	– –	5/8 M16	**UKF307**	F307	UK307
35	1 1/4 1 3/8	5 1/8 130	1 13/32 36	4 1/64 102	5/8 16	19/32 15	53/64 21	1 3/4(1 7/8) 44.5(48)	1 13/32(1 13/16) 36(46)	1 13/16 46 –	1/2 M14	**UKF208**	F208	UK208
	1 1/4 1 3/8	5 13/32 137	1 9/16 40	4 9/64 105	3/4 19	9/16 14	55/64 22	1 27/32 46.5	1 13/16 46	1 13/16 46	5/8 M16	**UKFX08**	FX08	UKX08
	1 1/4 1 3/8	5 29/32 150	1 9/16 40	4 13/32 112	3/4 19	21/32 17	29/32 23	2 50.5	1 13/16 46	– –	5/8 M16	**UKF308**	F308	UK308
40	1 1/2 1 5/8	5 13/32 137	1 1/2 38	4 9/64 105	5/8 16	5/8 16	55/64 22	1 7/8(2) 47.5(51)	1 17/32(1 31/32) 39(50)	2 1/16 52	1/2 M14	**UKF209**	F209	UK209
	1 1/2 1 5/8	5 5/8 143	1 9/16 40	4 3/8 111	3/4 19	9/16 14	29/32 23	1 29/32 48.5	1 31/32 50	2 1/16 52	5/8 M16	**UKFX09**	FX09	UKX09
	1 1/2 1 5/8	6 5/16 160	1 23/32 44	4 59/64 125	3/4 19	23/32 18	63/64 25	2 5/32 55	1 31/32 50	– –	5/8 M16	**UKF309**	F309	UK309
45	1 3/4	5 5/8 143	1 9/16 40	4 3/8 111	5/8 16	5/8 16	55/64 22	1 29/32(2 1/16) 48.5(52)	1 21/32(2 5/32) 42(55)	2 9/32 58	1/2 M14	**UKF210**	F210	UK210
	1 3/4	6 3/8 162	1 23/32 44	5 1/8 130	3/4 19	25/32 20	1 1/32 26	2 3/32 53.5	2 5/32 55	2 9/32 58	5/8 M16	**UKFX10**	FX10	UKX10
	1 3/4	6 7/8 175	1 7/8 48	5 13/64 132	29/32 23	3/4 19	1 7/64 28	2 3/8 60	2 5/32 55	– –	3/4 M20	**UKF310**	F310	UK310
50	1 7/8 2	6 3/8 162	1 11/16 43	5 1/8 130	3/4 19	23/32 18	63/64 25	2 1/16(2 1/4) 52.5(57)	1 25/32(2 5/16) 45(59)	2 17/32 64	5/8 M16	**UKF211**	F211	UK211

Note 1) Codes shown in parentheses indicate the dimensions and Part No. of applicable adapter (H2300X series) for UK200L3 series (triple-lip seal type).

Remarks 1. In Part No. of unit and units with covers, fitting codes follow bore diameter numbers. (See **Table 10.5** in P.51.)

2. Part No. of applicable grease nipples are shown below.
A-1/4-28UNF.....205~210, X05~X09, 305~308
A-PT1/8.....211~218, X10~X20, 309~328

With Pressed Steel Cover

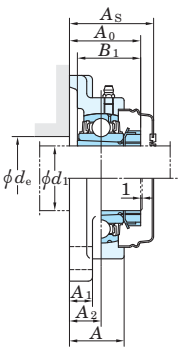

With Cast Iron Cover

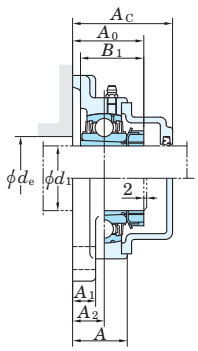

Variations of tolerance of distance from mounting surface to center of spherical bore (Δ_{A2s}) and tolerance of position of bolt hole (X)

Unit : mm

Housing No.			Δ_{A2s}	X
F205~F210	FX05~FX10	F305~F310	±0.5	0.7
F211~F218	FX11~FX20	F311~F328	±0.8	1

Variations of tolerance of bolt hole diameter (Δ_{Ns})

Unit : mm

Housing No.			Δ_{Ns}
F205~F218	FX05~FX18	F305~F315	±0.2
	FX20	F316~F328	±0.3

Adapter[1)] assembly No.	Mass	Basic Load Ratings kN		Factor	With Pressed Steel Cover					With Cast Iron Cover				
					Unit No.		Dimension mm	inch	Mass	Unit No.		Dimension mm	inch	Mass
	kg	C_r	C_{0r}	f_0	Open End Type	Closed End Type	A_s		kg	Open End Type	Closed End Type	A_c		kg
HE305X(HE2305X)	0.87	14.0	7.85	13.9	–	–	–	–	–	–	–	–	–	–
H305X(H2305X)	0.87				UKF205C	UKF205D	40	1 9/16	0.87	UKF205FC	UKF205FD	49	1 15/16	1.1
HE2305X	1.2	19.5	11.3	13.9	–	–	–	–	–	–	–	–	–	–
H2305X	1.2				UKFX05C	UKFX05D	44	1 23/32	1.2	–	–	–	–	–
HE2305X	1.4	21.2	10.9	12.6	–	–	–	–	–	–	–	–	–	–
H2305X	1.4				–	–	–	–	–	UKF305C	UKF305D	54	2 1/8	1.7
H306X(H2306X)	1.3	19.5	11.3	13.9	UKF206C	UKF206D	44	1 23/32	1.3	UKF206FC	UKF206FD	53	2 3/32	1.6
HE306X(HE2306X)	1.3				–	–	–	–	–	–	–	–	–	–
H2306X	1.6	25.7	15.4	13.9	UKFX06C	UKFX06D	49	1 15/16	1.6	–	–	–	–	–
HE2306X	1.6				–	–	–	–	–	–	–	–	–	–
H2306X	1.9	26.7	15.0	13.3	–	–	–	–	–	UKF306C	UKF306D	59	2 5/16	2.2
HE2306X	1.9				–	–	–	–	–	–	–	–	–	–
HS307X(HS2307X)	1.6	25.7	15.4	13.9	–	–	–	–	–	–	–	–	–	–
H307X(H2307X)	1.6				UKF207C	UKF207D	49	1 15/16	1.6	UKF207FC	UKF207FD	58	2 9/32	2.0
HS2307X	2.0	29.1	17.8	14.0	–	–	–	–	–	–	–	–	–	–
H2307X	2.0				UKFX07C	UKFX07D	55	2 5/32	2.0	–	–	–	–	–
HS2307X	2.3	33.4	19.3	13.2	–	–	–	–	–	–	–	–	–	–
H2307X	2.3				–	–	–	–	–	UKF307C	UKF307D	64	2 17/32	2.8
HE308X(HE2308X)	1.9	29.1	17.8	14.0	–	–	–	–	–	–	–	–	–	–
HS308X(HS2308X)	1.9				–	–	–	–	–	–	–	–	–	–
H308X(H2308X)	1.9				UKF208C	UKF208D	55	2 5/32	1.9	UKF208FC	UKF208FD	64	2 17/32	2.3
HE2308X	2.3	34.1	21.3	14.0	–	–	–	–	–	–	–	–	–	–
HS2308X	2.3				–	–	–	–	–	–	–	–	–	–
H2308X	2.3				UKFX08C	UKFX08D	56	2 7/32	2.3	–	–	–	–	–
HE2308X	3.1	40.7	24.0	13.2	–	–	–	–	–	–	–	–	–	–
HS2308X	3.1				–	–	–	–	–	–	–	–	–	–
H2308X	3.1				–	–	–	–	–	UKF308C	UKF308D	71	2 25/32	3.6
HE309X(HE2309X)	2.3	34.1	21.3	14.0	–	–	–	–	–	–	–	–	–	–
H309X(H2309X)	2.3				UKF209C	UKF209D	56	2 7/32	2.3	UKF209FC	UKF209FD	66	2 19/32	2.8
HS309X(HS2309X)	2.3				–	–	–	–	–	–	–	–	–	–
HE2309X	2.7	35.1	23.3	14.4	–	–	–	–	–	–	–	–	–	–
H2309X	2.7				UKFX09C	UKFX09D	60	2 3/8	2.7	–	–	–	–	–
HS2309X	2.7				–	–	–	–	–	–	–	–	–	–
HE2309X	4.1	48.9	29.5	13.3	–	–	–	–	–	–	–	–	–	–
H2309X	4.1				–	–	–	–	–	UKF309C	UKF309D	76	3	4.7
HS2309X	4.1				–	–	–	–	–	–	–	–	–	–
HE310X(HE2310X)	2.6	35.1	23.3	14.4	–	–	–	–	–	–	–	–	–	–
H310X(H2310X)	2.6				UKF210C	UKF210D	59	2 5/16	2.6	UKF210FC	UKF210FD	70.5	2 25/32	3.1
HE2310X	3.6	43.4	29.4	14.4	–	–	–	–	–	–	–	–	–	–
H2310X	3.6				UKFX10C	UKFX10D	64	2 17/32	3.6	–	–	–	–	–
HE2310X	5.1	62.0	38.3	13.2	–	–	–	–	–	–	–	–	–	–
H2310X	5.1				–	–	–	–	–	UKF310C	UKF310D	83	3 9/32	5.9
HS311X(HS2311X)	3.5	43.4	29.4	14.4	–	–	–	–	–	–	–	–	–	–
H311X(H2311X)	3.5				UKF211C	UKF211D	63	2 15/32	3.5	UKF211FC	UKF211FD	74.5	2 15/16	4.1
HE311X(HE2311X)	3.5				–	–	–	–	–	–	–	–	–	–

3. In Part No. of unit with adapters and bearing with adapters, Part No. of applicable adapter follow the Part No. shown in the dimensional tables. (Example of Part No. : UKF206J + H306X, UK206 + H306X)
4. As for the triple-lip seal type product (205 is the double-lip seal type product), supplementary code L3 (L2) follows the Part No. of unit or bearing. (Example of Part No. : UKF206JL3 + H2306X, UK206L3 + H2306X)
5. For the dimensions and forms of applicable bearings and adapters, see the dimensional tables of ball bearing for unit and adapter assemblies.

UKF
Tapered bore (with adapter)
d_1 (50) ~ 85 mm

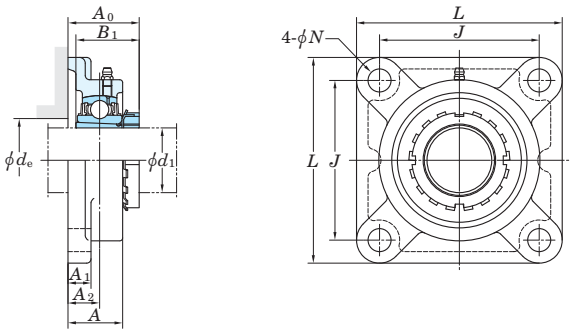

Shaft Dia. mm	Shaft Dia. inch	Dimensions inch / mm L	A	J	N	A_1	A_2	A_0 1)	B_1 1)	d_e (min.)	Bolt Size inch / mm	Standard Unit No.	Housing No.	Bearing No.
d_1														
50	1 7/8	6 7/8	1 15/16	5 5/8	3/4	25/32	1 9/64	2 1/4	2 5/16	2 17/32	5/8	UKFX11	FX11	UKX11
	2	175	49	143	19	20	29	57.5	59	64	M16			
	1 7/8	7 9/32	2 1/16	5 33/64	29/32	25/32	1 3/16	2 1/2	2 5/16	–	3/4	UKF311	F311	UK311
	2	185	52	140	23	20	30	63.5	59	–	M20			
55	2 1/8	6 7/8	1 7/8	5 5/8	3/4	23/32	1 9/64	2 5/16(2 19/32)	1 27/32(2 7/16)	2 23/32	5/8	UKF212	F212	UK212
		175	48	143	19	18	29	58.5(65.5)	47(62)	69	M16			
	2 1/8	7 3/8	2 5/16	5 55/64	3/4	13/16	1 11/32	2 9/16	2 7/16	2 23/32	5/8	UKFX12	FX12	UKX12
		187	59	149	19	21	34	65	62	69	M16			
	2 1/8	7 11/16	2 7/32	5 29/32	29/32	7/8	1 19/64	2 3/4	2 7/16	–	3/4	UKF312	F312	UK312
		195	56	150	23	22	33	69.5	62	–	M20			
60	2 1/4	7 3/8	1 31/32	5 55/64	3/4	7/8	1 3/16	2 7/16(2 21/32)	1 31/32(2 9/16)	2 29/32	5/8	UKF213	F213	UK213
	2 3/8	187	50	149	19	22	30	62(67.5)	50(65)	74	M16			
	2 1/4	7 3/8	2 5/16	5 55/64	3/4	13/16	1 11/32	2 11/16	2 9/16	2 29/32	5/8	UKFX13	FX13	UKX13
	2 3/8	187	59	149	19	21	34	68	65	74	M16			
	2 1/4	8 3/16	2 9/32	6 17/32	29/32	7/8	1 19/64	2 13/16	2 9/16	–	3/4	UKF313	F313	UK313
	2 3/8	208	58	166	23	22	33	71.5	65	–	M20			
65	2 1/2	7 7/8	2 7/32	6 17/64	3/4	7/8	1 11/32	2 23/32(2 15/16)	2 5/32(2 7/8)	3 11/32	5/8	UKF215	F215	UK215
		200	56	159	19	22	34	69(74.5)	55(73)	85	M16			
	2 1/2	7 3/4	2 11/16	5 63/64	29/32	15/16	1 9/16	3	2 7/8	3 11/32	3/4	UKFX15	FX15	UKX15
		197	68	152	23	24	40	76	73	85	M20			
	2 1/2	9 9/32	2 19/32	7 1/4	63/64	31/32	1 17/32	3 7/32	2 7/8	–	7/8	UKF315	F315	UK315
		236	66	184	25	25	39	81.5	73	–	M22			
70	2 3/4	8 3/16	2 9/32	6 1/2	29/32	7/8	1 11/32	2 27/32(3 3/32)	2 5/16(3 1/16)	3 17/32	3/4	UKF216	F216	UK216
		208	58	165	23	22	34	72(78.5)	59(78)	90	M20			
	2 3/4	8 7/16	2 3/4	6 47/64	29/32	15/16	1 9/16	3 1/8	3 1/16	3 17/32	3/4	UKFX16	FX16	UKX16
		214	70	171	23	24	40	79	78	90	M20			
	2 3/4	9 27/32	2 11/16	7 23/32	1 7/32	1 1/16	1 1/2	3 1/4	3 1/16	–	1	UKF316	F316	UK316
		250	68	196	31	27	38	82.5	78	–	M27			
75	3	8 21/32	2 15/32	6 57/64	29/32	15/16	1 13/32	3(3 1/4)	2 15/32(3 7/32)	3 25/32	3/4	UKF217	F217	UK217
		220	63	175	23	24	36	76(82.5)	63(82)	96	M20			
	3	8 7/16	2 3/4	6 47/64	29/32	15/16	1 9/16	3 7/32	3 7/32	3 25/32	3/4	UKFX17	FX17	UKX17
		214	70	171	23	24	40	82	82	96	M20			
	3	10 1/4	2 29/32	8 1/32	1 7/32	1 1/16	1 47/64	3 5/8	3 7/32	–	1	UKF317	F317	UK317
		260	74	204	31	27	44	92	82	–	M27			
80	–	9 1/4	2 11/16	7 23/64	29/32	31/32	1 9/16	3 7/32(3 17/32)	2 9/16(3 3/8)	4 1/32	3/4	UKF218	F218	UK218
		235	68	187	23	25	40	82(89.5)	65(86)	102	M20			
	–	8 7/16	3	6 47/64	29/32	15/16	1 49/64	3 15/32	3 3/8	4 1/32	3/4	UKFX18	FX18	UKX18
		214	76	171	23	24	45	88	86	102	M20			
	–	11 1/32	3	8 1/2	1 3/8	1 3/16	1 47/64	3 5/8	3 3/8	–	1 1/8	UKF318	F318	UK318
		280	76	216	35	30	44	92	86	–	M30			
85	3 1/4	11 13/32	3 11/16	8 31/32	1 3/8	1 3/16	2 21/64	4 3/8	3 17/32	–	1 1/8	UKF319	F319	UK319
		290	94	228	35	30	59	111	90	–	M30			

Note 1) Codes shown in parentheses indicate the dimensions and Part No. of applicable adapter (H2300X series) for UK200L3 series (triple-lip seal type).

Remarks 1. In Part No. of unit and units with covers, fitting codes follow bore diameter numbers. (See **Table 10.5** in P.51.)

2. Part No. of applicable grease nipples are shown below.
A-1/4-28UNF.....205~210, X05~X09, 305~308
A-PT1/8.....211~218, X10~X20, 309~328

With Pressed Steel Cover

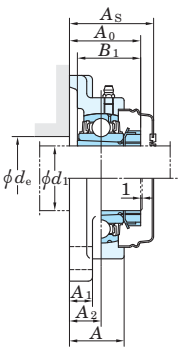

With Cast Iron Cover

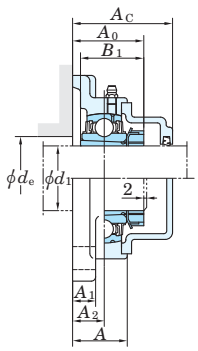

Variations of tolerance of distance from mounting surface to center of spherical bore (Δ_{A2s}) and tolerance of position of bolt hole (X)

Unit : mm

Housing No.			Δ_{A2s}	X
F205~F210	FX05~FX10	F305~F310	±0.5	0.7
F211~F218	FX11~FX20	F311~F328	±0.8	1

Variations of tolerance of bolt hole diameter (Δ_{Ns})

Unit : mm

Housing No.			Δ_{Ns}
F205~F218	FX05~FX18	F305~F315	±0.2
	FX20	F316~F328	±0.3

Adapter[1] assembly No.	Mass	Basic Load Ratings kN		Factor	With Pressed Steel Cover					With Cast Iron Cover				
					Unit No.		Dimension mm	inch	Mass	Unit No.		Dimension mm	inch	Mass
	kg	C_r	C_{0r}	f_0	Open End Type	Closed End Type	A_s		kg	Open End Type	Closed End Type	A_c		kg
HS2311X	4.6				–	–	–	–	–	–	–	–	–	–
H2311X	4.6	52.4	36.2	14.4	UKFX11C	UKFX11D	73	2 7/8	4.6	–	–	–	–	–
HE2311X	4.6				–	–	–	–	–	–	–	–	–	–
HS2311X	5.9				–	–	–	–	–	–	–	–	–	–
H2311X	5.9	71.6	45.0	13.2	–	–	–	–	–	UKF311C	UKF311D	87	3 7/16	6.8
HE2311X	5.9				–	–	–	–	–	–	–	–	–	–
HS312X(HS2312X)	4.1	52.4	36.2	14.4	–	–	–	–	–	–	–	–	–	–
H312X(H2313X)	4.1				UKF212C	UKF212D	73	2 7/8	4.1	UKF212FC	UKF212FD	86	3 3/8	4.9
HS2312X	5.5	57.2	40.1	14.4	–	–	–	–	–	–	–	–	–	–
H2312X	5.5				UKFX12C	UKFX12D	78	3 1/16	5.5	–	–	–	–	–
HS2312X	6.8	81.9	52.2	13.2	–	–	–	–	–	–	–	–	–	–
H2312X	6.8				–	–	–	–	–	UKF312C	UKF312D	95	3 3/4	8.0
HE313X(HE2313X)	5.1				–	–	–	–	–	–	–	–	–	–
H313X(H2313X)	5.1	57.2	40.1	14.4	UKF213C	UKF213D	74	2 29/32	5.1	UKF213FC	UKF213FD	87	3 7/16	6.0
HS313X(HS2313X)	5.1				–	–	–	–	–	–	–	–	–	–
HE2313X	6.0				–	–	–	–	–	–	–	–	–	–
H2313X	6.0	62.2	44.1	14.5	UKFX13C	UKFX13D	83	3 9/32	6.0	–	–	–	–	–
HS2313X	6.0				–	–	–	–	–	–	–	–	–	–
HE2313X	7.9				–	–	–	–	–	–	–	–	–	–
H2313X	7.9	92.7	59.9	13.2	–	–	–	–	–	UKF313C	UKF313D	94	3 11/16	9.0
HS2313X	7.9				–	–	–	–	–	–	–	–	–	–
HE315X(HE2315X)	6.5	67.4	48.3	14.5	–	–	–	–	–	–	–	–	–	–
H315X(H2315X)	6.5				UKF215C	UKF215D	83	3 9/32	6.5	UKF215FC	UKF215FD	96	3 25/32	7.5
HE2315X	8.1	72.7	53.0	14.6	–	–	–	–	–	–	–	–	–	–
H2315X	8.1				UKFX15C	UKFX15D	94	3 11/16	8.1	–	–	–	–	–
HE2315X	11.7	113	77.2	13.2	–	–	–	–	–	–	–	–	–	–
H2315X	11.7				–	–	–	–	–	UKF315C	UKF315D	106	4 3/16	13.1
HE316X(HE2316X)	7.6	72.7	53.0	14.6	–	–	–	–	–	–	–	–	–	–
H316X(H2316X)	7.6				UKF216C	UKF216D	88	3 15/32	7.6	UKF216FC	UKF216FD	103	4 1/16	8.9
HE2316X	9.5	84.0	61.9	14.5	–	–	–	–	–	–	–	–	–	–
H2316X	9.5				UKFX16C	UKFX16D	96	3 25/32	9.5	–	–	–	–	–
HE2316X	12.9	123	86.7	13.3	–	–	–	–	–	–	–	–	–	–
H2316X	12.9				–	–	–	–	–	UKF316C	UKF316D	107	4 7/32	14.5
H317X(H2317X)	9.0	84.0	61.9	14.5	UKF217C	UKF217D	92	3 5/8	9.0	UKF217FC	UKF217FD	107	4 7/32	10.4
HE317X(HE2317X)	9.0				–	–	–	–	–	–	–	–	–	–
H2317X	10.4	96.1	71.5	14.5	UKFX17C	UKFX17D	101	3 31/32	10.4	–	–	–	–	–
HE2317X	10.4				–	–	–	–	–	–	–	–	–	–
H2317X	15.2	133	96.8	13.3	–	–	–	–	–	UKF317C	UKF317D	117	4 19/32	17.0
HE2317X	15.2				–	–	–	–	–	–	–	–	–	–
H318X(H2318X)	11.4	96.1	71.5	14.5	UKF218C	UKF218D	101	3 31/32	11.4	UKF218FC	UKF218FD	116	4 9/16	13.0
H2318X	11.4	109	81.9	14.4	–	–	–	–	–	UKFX18C	UKFX18D	124	4 7/8	13.3
H2318X	19.0	143	107	13.3	–	–	–	–	–	UKF318C	UKF318D	119	4 11/16	21.1
HE2319X	21.9	153	119	13.3	–	–	–	–	–	–	–	–	–	–
H2319X	21.9				–	–	–	–	–	UKF319C	UKF319D	140	5 1/2	24.3

3. In Part No. of unit with adapters and bearing with adapters, Part No. of applicable adapter follow the Part No. shown in the dimensional tables. (Example of Part No. : UKF206J + H306X, UK206 + H306X)
4. As for the triple-lip seal type product (205 is the double-lip seal type product), supplementary code L3 (L2) follows the Part No. of unit or bearing. (Example of Part No. : UKF206JL3 + H2306X, UK206L3 + H2306X)
5. For the dimensions and forms of applicable bearings and adapters, see the dimensional tables of ball bearing for unit and adapter assemblies.

UKF
Tapered bore (with adapter)
d_1 90 ~ 125 mm

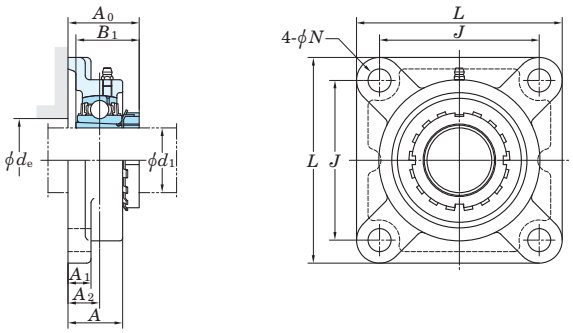

Shaft Dia. mm	Shaft Dia. inch	Dimensions inch / mm L	A	J	N	A_1	A_2	A_0 1)	B_1 1)	d_e (min.)	Bolt Size inch / mm	Standard Unit No.	Housing No.	Bearing No.
d_1														
90	3 1/2	10 9/16	3 13/16	8 5/16	1 7/32	1 3/32	2 21/64	4 3/16	3 13/16	4 13/32	1	**UKFX20**	FX20	UKX20
		268	97	211	31	28	59	106	97	112	M27			
	3 1/2	12 7/32	3 11/16	9 17/32	1 1/2	1 1/4	2 21/64	4 7/16	3 13/16	–	1 1/4	**UKF320**	F320	UK320
		310	94	242	38	32	59	113	97	–	M33			
100		13 3/8	3 25/32	10 15/32	1 39/64	1 3/8	2 23/64	4 23/32	4 1/8	–	1 3/8	**UKF322**	F322	UK322
	4	340	96	266	41	35	60	120	105	–	M36			
110	–	14 9/16	4 11/32	11 27/64	1 39/64	1 9/16	2 9/16	5 1/8	4 13/32	–	1 3/8	**UKF324**	F324	UK324
		370	110	290	41	40	65	130.5	112	–	M36			
115	4 1/2	16 5/32	4 17/32	12 19/32	1 39/64	1 25/32	2 9/16	5 3/16	4 3/4	–	1 3/8	**UKF326**	F326	UK326
		410	115	320	41	45	65	131.5	121	–	M36			
125	–	17 23/32	4 29/32	13 25/32	1 39/64	2 5/32	2 61/64	5 13/16	5 5/32	–	1 3/8	**UKF328**	F328	UK328
		450	125	350	41	55	75	147.5	131	–	M36			

Note 1) Codes shown in parentheses indicate the dimensions and Part No. of applicable adapter (H2300X series) for UK200L3 series (triple-lip seal type).

Remarks 1. In Part No. of unit and units with covers, fitting codes follow bore diameter numbers. (See **Table 10.5** in P.51.)

2. Part No. of applicable grease nipples are shown below.
A-1/4-28UNF.....205~210, X05~X09, 305~308
A-PT1/8.....211~218, X10~X20, 309~328

With Pressed Steel Cover

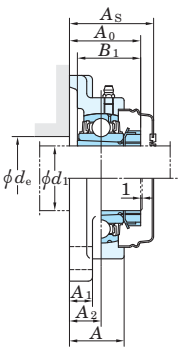

With Cast Iron Cover

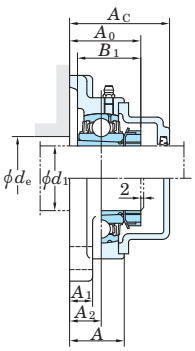

Variations of tolerance of distance from mounting surface to center of spherical bore (Δ_{A2s}) and tolerance of position of bolt hole (X)

Unit : mm

Housing No.			Δ_{A2s}	X
F205~F210	FX05~FX10	F305~F310	±0.5	0.7
F211~F218	FX11~FX20	F311~F328	±0.8	1

Variations of tolerance of bolt hole diameter (Δ_{Ns})

Unit : mm

Housing No.			Δ_{Ns}
F205~F218	FX05~FX18	F305~F315	±0.2
	FX20	F316~F328	±0.3

Adapter[1)] assembly No.	Mass	Basic Load Ratings kN		Factor	With Pressed Steel Cover					With Cast Iron Cover				
					Unit No.		Dimension mm	inch	Mass	Unit No.		Dimension mm	inch	Mass
	kg	C_r	C_{0r}	f_0	Open End Type	Closed End Type	A_s		kg	Open End Type	Closed End Type	A_c		kg
HE2320X	18.4	133	105	14.4	–	–	–	–	–	–	–	–	–	–
H2320X	18.4				–	–	–	–	–	UKFX20C	UKFX20D	152	5 31/32	20.9
HE2320X	25.4	173	141	13.2	–	–	–	–	–	–	–	–	–	–
H2320X	25.4				–	–	–	–	–	UKF320C	UKF320D	146	5 3/4	28.5
H2322X	35.2	205	180	13.2	–	–	–	–	–	UKF322C	UKF322D	154	6 1/16	38.7
HE2322X	35.2				–	–	–	–	–	–	–	–	–	–
H2324	47.6	207	185	13.5	–	–	–	–	–	UKF324C	UKF324D	163	6 13/32	52.7
HE2326	65.3	229	214	13.6	–	–	–	–	–	–	–	–	–	–
H2326	65.3				–	–	–	–	–	UKF326C	UKF326D	172	6 25/32	71.9
H2328	93.4	253	246	13.6	–	–	–	–	–	UKF328C	UKF328D	186	7 5/16	102

3. In Part No. of unit with adapters and bearing with adapters, Part No. of applicable adapter follow the Part No. shown in the dimensional tables. (Example of Part No. : UKF206J + H306X, UK206 + H306X)
4. As for the triple-lip seal type product (205 is the double-lip seal type product), supplementary code L3 (L2) follows the Part No. of unit or bearing. (Example of Part No. : UKF206JL3 + H2306X, UK206L3 + H2306X)
5. For the dimensions and forms of applicable bearings and adapters, see the dimensional tables of ball bearing for unit and adapter assemblies.

UCFS
Cylindrical bore (with set screws)
d 25 ~ 140 mm

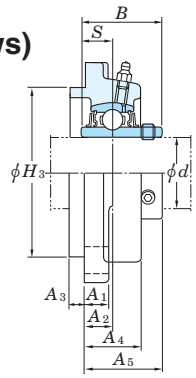

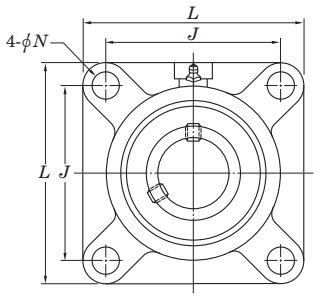

Shaft Dia. mm	Shaft Dia. inch	Dimensions inch / mm											Bolt Size inch / mm	Standard Unit No.	Standard Housing No.	Standard Bearing No.
d		L	H_3	J	N	A_1	A_2	A_3	A_4	A_5	B	S				
25	1	4 11/32 110	3.1496 80	3 5/32 80	5/8 16	1/2 13	23/64 9	9/32 7	7/8 22	1 1/4 32	1.496 38	0.591 15	1/2 M14	**UCFS305** **UCFS305-16**	FS305	UC305 UC305-16
30	–	4 29/32 125	3.5433 90	3 47/64 95	5/8 16	19/32 15	25/64 10	5/16 8	15/16 24	1 13/32 36	1.693 43	0.669 17	1/2 M14	**UCFS306**	FS306	UC306
35	–	5 5/16 135	3.9370 100	3 15/16 100	3/4 19	5/8 16	7/16 11	23/64 9	1 1/16 27	1 9/16 40	1.890 48	0.748 19	5/8 M16	**UCFS307**	FS307	UC307
40	1 1/2	5 29/32 150	4.5276 115	4 13/32 112	3/4 19	21/32 17	33/64 13	25/64 10	1 3/16 30	1 13/16 46	2.047 52	0.748 19	5/8 M16	**UCFS308-24** **UCFS308**	FS308	UC308-24 UC308
45	1 3/4	6 5/16 160	4.9213 125	4 59/64 125	3/4 19	23/32 18	35/64 14	7/16 11	1 5/16 33	1 15/16 49	2.244 57	0.866 22	5/8 M16	**UCFS309-28** **UCFS309**	FS309	UC309-28 UC309
50	–	6 7/8 175	5.5118 140	5 13/64 132	29/32 23	3/4 19	5/8 16	15/32 12	1 13/32 36	2 5/32 55	2.402 61	0.866 22	3/4 M20	**UCFS310**	FS310	UC310
55	2	7 9/32 185	5.9055 150	5 33/64 140	29/32 23	25/32 20	43/64 17	33/64 13	1 17/32 39	2 9/32 58	2.598 66	0.984 25	3/4 M20	**UCFS311-32** **UCFS311**	FS311	UC311-32 UC311
60	–	7 11/16 195	6.2992 160	5 29/32 150	29/32 23	7/8 22	3/4 19	35/64 14	1 21/32 42	2 17/32 64	2.795 71	1.024 26	3/4 M20	**UCFS312**	FS312	UC312
65	2 1/2	8 3/16 208	6.8898 175	6 17/32 166	29/32 23	7/8 22	19/32 15	45/64 18	1 9/16 40	2 3/8 60	2.953 75	1.181 30	3/4 M20	**UCFS313-40** **UCFS313**	FS313	UC313-40 UC313
70	2 3/4	8 29/32 226	7.2835 185	7 1/64 178	63/64 25	31/32 25	45/64 18	45/64 18	1 11/16 43	2 15/32 63	3.071 78	1.299 33	7/8 M22	**UCFS314-44** **UCFS314**	FS314	UC314-44 UC314
75	2 15/16 3	9 9/32 236	7.8740 200	7 1/4 184	63/64 25	31/32 25	53/64 21	45/64 18	1 7/8 48	2 25/32 71	3.228 82	1.260 32	7/8 M22	**UCFS315-47** **UCFS315** **UCFS315-48**	FS315	UC315-47 UC315 UC315-48
80	–	9 27/32 250	8.2677 210	7 23/32 196	1 7/32 31	1 1/16 27	45/64 18	25/32 20	1 7/8 48	2 3/4 70	3.386 86	1.339 34	1 M27	**UCFS316**	FS316	UC316
85	–	10 1/4 260	8.6614 220	8 1/32 204	1 7/32 31	1 1/16 27	15/16 24	25/32 20	2 1/8 54	3 5/32 80	3.780 96	1.575 40	1 M27	**UCFS317**	FS317	UC317
90	3 1/2	11 1/32 280	9.4488 240	8 1/2 216	1 3/8 35	1 3/16 30	15/16 24	25/32 20	2 7/32 56	3 5/32 80	3.780 96	1.575 40	1 1/8 M30	**UCFS318-56** **UCFS318**	FS318	UC318-56 UC318
95	–	11 13/32 290	9.8425 250	8 31/32 228	1 3/8 35	1 3/16 30	1 17/32 39	25/32 20	2 29/32 74	3 31/32 101	4.055 103	1.614 41	1 1/8 M30	**UCFS319**	FS319	UC319
100	3 15/16 4	12 7/32 310	10.2362 260	9 17/32 242	1 1/2 38	1 1/4 32	1 17/32 39	25/32 20	2 29/32 74	4 1/8 105	4.252 108	1.654 42	1 1/4 M33	**UCFS320** **UCFS320-63** **UCFS320-64**	FS320	UC320 UC320-63 UC320-64
105	–	12 7/32 310	10.2362 260	9 17/32 242	1 1/2 38	1 1/4 32	1 17/32 39	25/32 20	2 29/32 74	4 7/32 107	4.409 112	1.732 44	1 1/4 M33	**UCFS321**	FS321	UC321
110	–	13 3/8 340	11.8110 300	10 15/32 266	1 39/64 41	1 3/8 35	1 3/8 35	63/64 25	2 25/32 71	4 3/16 106	4.606 117	1.811 46	1 3/8 M36	**UCFS322**	FS322	UC322
120	–	14 9/16 370	12.9921 330	11 27/64 290	1 39/64 41	1 9/16 40	1 3/8 35	1 3/16 30	3 5/32 80	4 11/32 110	4.961 126	2.008 51	1 3/8 M36	**UCFS324**	FS324	UC324
130	–	16 5/32 410	14.1732 360	12 19/32 320	1 39/64 41	1 25/32 45	1 3/8 35	1 3/16 30	3 11/32 85	4 9/16 116	5.315 135	2.126 54	1 3/8 M36	**UCFS326**	FS326	UC326
140	–	17 23/32 450	15.7480 400	13 25/32 350	1 39/64 41	2 5/32 55	1 49/64 45	1 3/16 30	3 3/4 95	5 5/32 131	5.709 145	2.323 59	1 3/8 M36	**UCFS328**	FS328	UC328

Remarks 1. In Part No. of unit and units with covers, fitting codes follow bore diameter numbers. (See **Table 10.5** in P.51.)
2. Part No. of applicable grease nipples are shown below.
A-1/4-28UNF ..... 305~308
A-PT1/8 ..... 309~328

With Cast Iron Cover

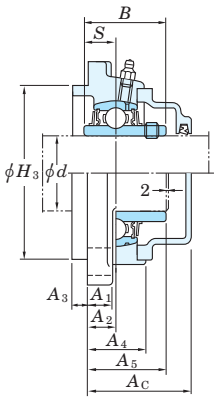

Variations of tolerance of spigot joint outside diameter (Δ_{H3s}), variations of tolerance of distance from mounting surface to center of spherical bore (Δ_{A2s}), tolerance of position of bolt hole (X), and tolerance of circumferential runout of spigot joint (Y)

Unit : mm

Housing No.	Δ_{H3s}	Δ_{A2s}	X	Y
FS305	0 −0.046	±0.5	0.7	0.2
FS306~FS308	0 −0.054			
FS309~FS310	0 −0.063	±0.8	1	0.3 ~FS318 FS319~ 0.4
FS311~FS313				
FS314~FS319	0 −0.072			
FS320~FS322	0 −0.081			
FS324~FS328	0 −0.089			

Variations of tolerance of bolt hole diameter (Δ_{Ns})

Unit : mm

Housing No.	Δ_{Ns}
FS305~315	±0.2
FS316~328	±0.3

Mass	Basic Load Ratings kN		Factor	With Cast Iron Cover Unit No.		Dimension mm	inch	Mass
				Open End Type	Closed End Type	A_c		
kg	C_r	C_{0r}	f_0					kg
1.4 1.4	21.2	10.9	12.6	UCFS305C –	UCFS305D –	47 –	1 27/32 –	1.7 –
1.9	26.7	15.0	13.3	UCFS306C	UCFS306D	51	2	2.2
2.3	33.4	19.3	13.2	UCFS307C	UCFS307D	55	2 5/32	2.7
3.4 3.4	40.7	24.0	13.2	– UCFS308C	– UCFS308D	– 61	– 2 13/32	– 3.9
4.4 4.4	48.9	29.5	13.3	– UCFS309C	– UCFS309D	– 65	– 2 9/16	– 5.0
5.3	62.0	38.3	13.2	UCFS310C	UCFS310D	71	2 25/32	6.1
6.1 6.1	71.6	45.0	13.2	– UCFS311C	– UCFS311D	– 74	– 2 29/32	– 7.0
7.4	81.9	52.2	13.2	UCFS312C	UCFS312D	81	3 3/16	8.6
8.8 8.8	92.7	59.9	13.2	– UCFS313C	– UCFS313D	– 76	– 3	– 9.9
11.2 11.2	104	68.2	13.2	– UCFS314C	– UCFS314D	– 80	– 3 5/32	– 12.3
13.7 13.7 13.7	113	77.2	13.2	– UCFS315C –	– UCFS315D –	– 88 –	– 3 15/32 –	– 15.0 –
15.1	123	86.7	13.3	UCFS316C	UCFS316D	87	3 7/16	16.5
17.3	133	96.8	13.3	UCFS317C	UCFS317D	97	3 13/16	18.9
21.3 21.3	143	107	13.3	– UCFS318C	– UCFS318D	– 99	– 3 29/32	– 23.2
24.5	153	119	13.3	UCFS319C	UCFS319D	120	4 23/32	26.7
29.5 29.5 29.5	173	141	13.2	UCFS320C – –	UCFS320D – –	126 – –	4 31/32 – –	32.3 – –
32.7	184	153	13.2	UCFS321C	UCFS321D	128	5 1/32	35.7
39.0	205	180	13.2	UCFS322C	UCFS322D	129	5 3/32	42.4
50.6	207	185	13.5	UCFS324C	UCFS324D	133	5 1/4	55.4
67.7	229	214	13.6	UCFS326C	UCFS326D	142	5 29/32	73.8
94.0	253	246	13.6	UCFS328C	UCFS328D	156	6 5/32	102

3. As for the triple-lip seal type product, supplementary code L3 follows the Part No. of unit or bearing. (Example of Part No. : UCFS307JL3, UC307L3)
4. The dimensions and forms of applicable bearings, see the dimensional tables of ball bearing for unit.

UKFS
Tapered bore (with adapter)
d_1 20 ~ 125 mm

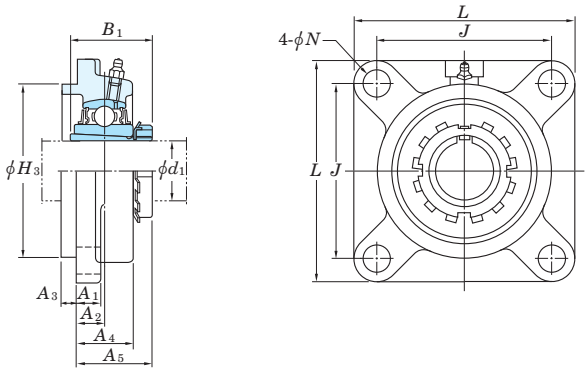

Shaft Dia. mm	Shaft Dia. inch	Dimensions inch / mm										Bolt Size inch / mm	Standard Unit No.	Standard Housing No.	Standard Bearing No.
d_1		L	H_3	J	N	A_1	A_2	A_3	A_4	A_5	B_1				
20	3/4	4 11/32 110	3.1496 80	3 5/32 80	5/8 16	1/2 13	23/64 9	9/32 7	7/8 22	1 3/16 30.5	1 3/8 35	1/2 M14	UKFS305	FS305	UK305
25	1	4 29/32 125	3.5433 90	3 47/64 95	5/8 16	19/32 15	25/64 10	5/16 8	15/16 24	1 5/16 33	1 1/2 38	1/2 M14	UKFS306	FS306	UK306
30	1 1/8	5 5/16 135	3.9370 100	3 15/16 100	3/4 19	5/8 16	7/16 11	23/64 9	1 1/16 27	1 7/16 36.5	1 11/16 43	5/8 M16	UKFS307	FS307	UK307
35	1 1/4 1 3/8	5 29/32 150	4.5276 115	4 13/32 112	3/4 19	21/32 17	33/64 13	25/64 10	1 3/16 30	1 19/32 40.5	1 13/16 46	5/8 M16	UKFS308	FS308	UK308
40	1 1/2 1 5/8	6 5/16 160	4.9213 125	4 59/64 125	3/4 19	23/32 18	35/64 14	7/16 11	1 5/16 33	1 23/32 44	1 31/32 50	5/8 M16	UKFS309	FS309	UK309
45	1 3/4	6 7/8 175	5.5118 140	5 13/64 132	29/32 23	3/4 19	5/8 16	15/32 12	1 13/32 36	1 7/8 48	2 5/32 55	3/4 M20	UKFS310	FS310	UK310
50	1 7/8 2	7 9/32 185	5.9055 150	5 33/64 140	29/32 23	25/32 20	43/64 17	33/64 13	1 17/32 39	2 50.5	2 5/16 59	3/4 M20	UKFS311	FS311	UK311
55	2 1/8	7 11/16 195	6.2992 160	5 29/32 150	29/32 23	7/8 22	3/4 19	35/64 14	1 21/32 42	2 3/16 55.5	2 7/16 62	3/4 M20	UKFS312	FS312	UK312
60	2 1/4 2 3/8	8 3/16 208	6.8898 175	6 17/32 166	29/32 23	7/8 22	19/32 15	45/64 18	1 9/16 40	2 3/32 53.5	2 9/16 65	3/4 M20	UKFS313	FS313	UK313
65	2 1/2	9 9/32 236	7.8740 200	7 1/4 184	63/64 25	31/32 25	53/64 21	45/64 18	1 7/8 48	2 1/2 63.5	2 7/8 73	7/8 M22	UKFS315	FS315	UK315
70	2 3/4	9 27/32 250	8.2677 210	7 23/32 196	1 7/32 31	1 1/16 27	45/64 18	25/32 20	1 7/8 48	2 15/32 62.5	3 1/16 78	1 M27	UKFS316	FS316	UK316
75	3	10 1/4 260	8.6614 220	8 1/32 204	1 7/32 31	1 1/16 27	15/16 24	25/32 20	2 1/8 54	2 27/32 72	3 7/32 82	1 M27	UKFS317	FS317	UK317
80	–	11 1/32 280	9.4488 240	8 1/2 216	1 3/8 35	1 3/16 30	15/16 24	25/32 20	2 7/32 56	2 27/32 72	3 3/8 86	1 1/8 M30	UKFS318	FS318	UK318
85	3 1/4	11 13/32 290	9.8425 250	8 31/32 228	1 3/8 35	1 3/16 30	1 17/32 39	25/32 20	2 29/32 74	2 19/32 91	3 17/32 90	1 1/8 M30	UKFS319	FS319	UK319
90	3 1/2	12 7/32 310	10.2362 260	9 17/32 242	1 1/2 38	1 1/4 32	1 17/32 39	25/32 20	2 29/32 74	2 21/32 93	3 13/16 97	1 1/4 M33	UKFS320	FS320	UK320
100	4	13 3/8 340	11.8110 300	10 15/32 266	1 39/64 41	1 3/8 35	1 3/8 35	63/64 25	2 25/32 71	2 3/4 95	4 1/8 105	1 3/8 M36	UKFS322	FS322	UK322
110	–	14 9/16 370	12.9921 330	11 27/64 290	1 39/64 41	1 9/16 40	1 3/8 35	1 3/16 30	3 5/32 80	3 21/32 100.5	4 13/32 112	1 3/8 M36	UKFS324	FS324	UK324
115	4 1/2	16 5/32 410	14.1732 360	12 19/32 320	1 39/64 41	1 25/32 45	1 3/8 35	1 3/16 30	3 11/32 85	4 101.5	4 3/4 121	1 3/8 M36	UKFS326	FS326	UK326
125	–	17 23/32 450	15.7480 400	13 25/32 350	1 39/64 41	2 5/32 55	1 49/64 45	1 3/16 30	3 3/4 95	4 5/8 117.5	5 5/32 131	1 3/8 M36	UKFS328	FS328	UK328

Remarks 1. In Part No. of unit and units with covers, fitting codes follow bore diameter numbers. (See **Table 10.5** in P.51.)
2. Part No. of applicable grease nipples are shown below.
A-1/4-28UNF ..... 305~308
A-PT1/8 ..... 309~328

With Cast Iron Cover

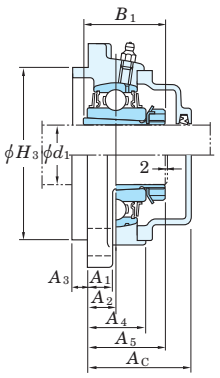

Variations of tolerance of spigot joint outside diameter (Δ_{H3s}), variations of tolerance of distance from mounting surface to center of spherical bore (Δ_{A2s}), tolerance of position of bolt hole (X), and tolerance of circumferential runout of spigot joint (Y)

Unit : mm

Housing No.	Δ_{H3s}	Δ_{A2s}	X	Y
FS305	0 −0.046	±0.5	0.7	0.2
FS306~FS308	0 −0.054			
FS309~FS310	0 −0.063	±0.8	1	0.3 ~FS318 FS319~ 0.4
FS311~FS313				
FS315~FS319	0 −0.072			
FS320~FS322	0 −0.081			
FS324~FS328	0 −0.089			

Variations of tolerance of bolt hole diameter (Δ_{Ns})

Unit : mm

Housing No.	Δ_{Ns}
FS305~315	±0.2
FS316~328	±0.3

Adapter assembly No.	Mass kg	Basic Load Ratings kN C_r	C_{0r}	Factor f_0	With Cast Iron Cover Unit No. Open End Type	Closed End Type	Dimension mm	inch	Mass kg
HE2305X	1.4	21.2	10.9	12.6	–	–	–	–	–
H2305X	1.4				UKFS305C	UKFS305D	47	1 27/32	1.7
H2306X	1.9	26.7	15.0	13.3	UKFS306C	UKFS306D	51	2	2.2
HE2306X	1.9				–	–	–	–	–
HS2307X	2.4	33.4	19.3	13.2	–	–	–	–	–
H2307X	2.4				UKFS307C	UKFS307D	55	2 5/32	2.9
HE2308X	3.4	40.7	24.0	13.2	–	–	–	–	–
HS2308X	3.4				–	–	–	–	–
H2308X	3.4				UKFS308C	UKFS308D	61	2 13/32	3.9
HE2309X	4.4	48.9	29.5	13.3	–	–	–	–	–
H2309X	4.4				UKFS309C	UKFS309D	65	2 9/16	5.0
HS2309X	4.4				–	–	–	–	–
HE2310X	5.3	62.0	38.3	13.2	–	–	–	–	–
H2310X	5.3				UKFS310C	UKFS310D	71	2 25/32	6.1
HS2311X	6.3	71.6	45.0	13.2	–	–	–	–	–
H2311X	6.3				UKFS311C	UKFS311D	74	2 29/32	7.2
HE2311X	6.3				–	–	–	–	–
HS2312X	7.3	81.9	52.2	13.2	–	–	–	–	–
H2312X	7.3				UKFS312C	UKFS312D	81	3 3/16	8.5
HE2313X	8.9	92.7	59.9	13.2	–	–	–	–	–
H2313X	8.9				UKFS313C	UKFS313D	76	3	10.0
HS2313X	8.9				–	–	–	–	–
HE2315X	13.4	113	77.2	13.2	–	–	–	–	–
H2315X	13.4				UKFS315C	UKFS315D	88	3 15/32	14.8
HE2316X	15.1	123	86.7	13.3	–	–	–	–	–
H2316X	15.1				UKFS316C	UKFS316D	87	3 7/16	16.7
H2317X	17.1	133	96.8	13.3	UKFS317C	UKFS317D	97	3 13/16	18.9
HE2317X	17.1				–	–	–	–	–
H2318X	21.4	143	107	13.3	UKFS318C	UKFS318D	99	3 29/32	23.5
HE2319X	24.8	153	119	13.3	–	–	–	–	–
H2319X	24.8				UKFS319C	UKFS319D	120	4 23/32	26.2
HE2320X	29.1	173	141	13.2	–	–	–	–	–
H2320X	29.1				UKFS320C	UKFS320D	126	4 31/32	32.2
H2322X	38.6	205	180	13.2	UKFS322C	UKFS322D	129	5 3/32	42.1
HE2322X	38.6				–	–	–	–	–
H2324	50.9	207	185	13.5	UKFS324C	UKFS324D	133	5 1/4	56.0
HE2326	67.5	229	214	13.6	–	–	–	–	–
H2326	67.5				UKFS326C	UKFS326D	142	5 29/32	74.1
H2328	94.0	253	246	13.6	UKFS328C	UKFS328D	156	6 5/32	102

3. In Part No. of unit with adapters and bearing with adapters, Part No. of applicable adapter follow the Part No. shown in the dimensional tables.
   (Example of Part No. : UKFS307J + H2307X, UK307 + H2307X)
4. As for the triple-lip seal type product, supplementary code L3 follows the Part No. of unit or bearing.
   (Example of Part No. : UKFS307JL3 + H2307X, UK307L3 + H2307X)
5. For the dimensions and forms of applicable bearings and adapters, see the dimensional tables of ball bearing for unit and adapter assemblies.

UCSF-H1S6
Cylindrical bore (with set screws)
d 20 ~ 50 mm

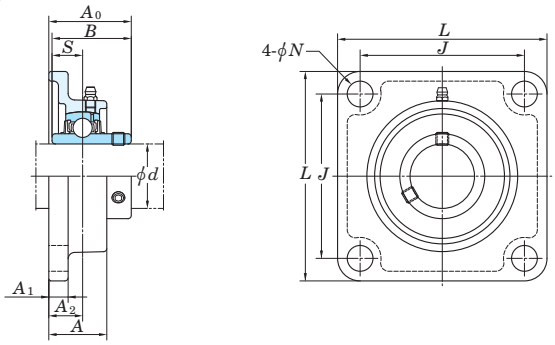

Shaft Dia. mm d	Dimensions inch / mm L	A	J	N	A_1	A_2	A_0	B	S	Bolt Size inch / mm	Unit No.	Standard Housing No.	Bearing No.	Mass kg
20	3 3/8 86	1 1/32 26	2 33/64 64	15/32 12	13/32 10	19/32 15	1 5/16 33.3	1.220 31	0.500 12.7	3/8 M10	**UCSF204H1S6**	SF204H1	UC204S6	0.5
25	3 3/4 95	1 3/32 27.5	2 3/4 70	15/32 12	13/32 10	5/8 16	1 13/32 35.8	1.343 34.1	0.563 14.3	3/8 M10	**UCSF205H1S6**	SF205H1	UC205S6	0.85
30	4 1/4 108	1 7/32 31	3 17/64 83	15/32 12	13/32 10	45/64 18	1 19/32 40.2	1.500 38.1	0.626 15.9	3/8 M10	**UCSF206H1S6**	SF206H1	UC206S6	1.1
35	4 19/32 117	1 11/32 34	3 5/8 92	35/64 14	7/16 11	3/4 19	1 3/4 44.4	1.689 42.9	0.689 17.5	7/16 M12	**UCSF207H1S6**	SF207H1	UC207S6	1.5
40	5 1/8 130	1 13/32 36	4 1/64 102	5/8 16	15/32 12	53/64 21	2 1/32 51.2	1.937 49.2	0.748 19	1/2 M14	**UCSF208H1S6**	SF208H1	UC208S6	1.7
45	5 13/32 137	1 1/2 38	4 9/64 105	5/8 16	1/2 13	55/64 22	2 1/16 52.2	1.937 49.2	0.748 19	1/2 M14	**UCSF209H1S6**	SF209H1	UC209S6	1.9
50	5 5/8 143	1 9/16 40	4 3/8 111	5/8 16	1/2 13	55/64 22	2 5/32 54.6	2.031 51.6	0.748 19	1/2 M14	**UCSF210H1S6**	SF210H1	UC210S6	2.4

Remarks 1. In Part No. of unit and units with covers, fitting codes follow bore diameter codes. (See **Table 10.5** in P.51.)
2. Part No. of the applicable grease nipple is A-1/4-28UNFN12.
3. For the dimensions and forms of applicable bearings, see the dimensional tables of ball bearing for unit.

With Pressed Stainless Steel Cover

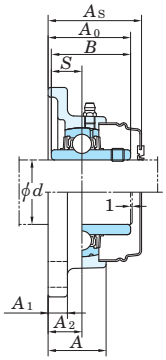

Variations of tolerance of distance from mounting surface to center of spherical bore (Δ_{A2s}) and tolerance of position of bolt hole (X)

Unit : mm

Housing No.	Δ_{A2s}	X
SF204 H1~210 H1	±0.5	0.7

Variations of tolerance of bolt hole diameter (Δ_{Ns})

Unit : mm

Housing No.	Δ_{Ns}
SF204 H1~210 H1	±0.2

Basic Load Ratings kN		Factor	With Pressed Stainless Steel Cover				
			Unit No.		Dimension mm inch		Mass
			Open End Type	Closed End Type			
C_r	C_{0r}	f_0			A_s		kg
10.9	5.35	13.2	UCSF204H1CS6	UCSF204H1DS6	38	1 1/2	0.5
11.9	6.3	13.9	UCSF205H1CS6	UCSF205H1DS6	40	1 9/16	0.85
16.5	9.05	13.9	UCSF206H1CS6	UCSF206H1DS6	45	1 25/32	1.1
21.8	12.3	13.9	UCSF207H1CS6	UCSF207H1DS6	49	1 15/16	1.5
24.8	14.3	14.0	UCSF208H1CS6	UCSF208H1DS6	56	2 7/32	1.7
27.8	16.2	14.0	UCSF209H1CS6	UCSF209H1DS6	57	2 1/4	1.9
29.8	18.6	14.4	UCSF210H1CS6	UCSF210H1DS6	59	2 5/16	2.4

UCFL
Cylindrical bore (with set screws)
d 12 ~ (45) mm

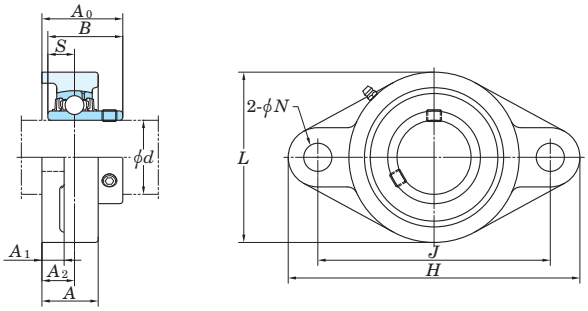

Shaft Dia. mm	Shaft Dia. inch	Dimensions inch / mm										Bolt Size inch / mm	Standard Unit No.	Standard Housing No.	Standard Bearing No.
d		H	L	A	J	N	A_1	A_2	A_0	B	S				
12													UCFL201		UC201
	1/2												UCFL201-8		UC201-8
15													UCFL202		UC202
	5/8	4 7/16	2 3/8	1	3 35/64	15/32	7/16	19/32	1 5/16	1.220	0.500	3/8	UCFL202-10	FL204	UC202-10
		113	60	25.5	90	12	11	15	33.3	31	12.7	M10			
17													UCFL203		UC203
	3/4												UCFL204-12		UC204-12
20													UCFL204		UC204
	7/8												UCFL205-14		UC205-14
	15/16	5 1/8	2 11/16	1 1/16	3 57/64	5/8	1/2	5/8	1 13/32	1.343	0.563	1/2	UCFL205-15	FL205	UC205-15
		130	68	27	99	16	13	16	35.8	34.1	14.3	M14	UCFL205		UC205
25	1												UCFL205-16		UC205-16
		5 9/16	3 9/32	1 3/16	4 39/64	15/32	1/2	45/64	1 19/32	1.500	0.626	3/8	UCFLX05	FLX05	UCX05
	1	141	83	30	117	12	13	18	40.2	38.1	15.9	M10	UCFLX05-16		UCX05-16
		5 29/32	3 5/32	1 5/32	4 29/64	3/4	1/2	5/8	1 17/32	1.496	0.591	5/8	UCFL305	FL305	UC305
	1	150	80	29	113	19	13	16	39	38	15	M16	UCFL305-16		UC305-16
	1 1/8												UCFL206-18		UC206-18
		5 13/16	3 5/32	1 7/32	4 39/64	5/8	1/2	45/64	1 19/32	1.500	0.626	1/2	UCFL206	FL206	UC206
	1 3/16	148	80	31	117	16	13	18	40.2	38.1	15.9	M14	UCFL206-19		UC206-19
	1 1/4												UCFL206-20		UC206-20
30													UCFLX06		UCX06
	1 3/16	6 5/32	3 3/4	1 11/32	5 1/8	5/8	9/16	3/4	1 3/4	1.689	0.689	1/2	UCFLX06-19	FLX06	UCX06-19
	1 1/4	156	95	34	130	16	14	19	44.4	42.9	17.5	M14	UCFLX06-20		UCX06-20
	–	7 3/32	3 17/32	1 1/4	5 9/32	29/32	19/32	45/64	1 23/32	1.693	0.669	3/4	UCFL306	FL306	UC306
		180	90	32	134	23	15	18	44	43	17	M20			
	1 1/4												UCFL207-20		UC207-20
	1 5/16												UCFL207-21		UC207-21
	1 3/8	6 11/32	3 17/32	1 11/32	5 1/8	5/8	9/16	3/4	1 3/4	1.689	0.689	1/2	UCFL207-22	FL207	UC207-22
		161	90	34	130	16	14	19	44.4	42.9	17.5	M14	UCFL207		UC207
35	1 7/16												UCFL207-23		UC207-23
	1 3/8												UCFLX07-22		UCX07-22
		6 23/32	4 1/8	1 1/2	5 43/64	5/8	9/16	53/64	2 1/32	1.937	0.748	1/2	UCFLX07	FLX07	UCX07
	1 7/16	171	105	38	144	16	14	21	51.2	49.2	19	M14	UCFLX07-23		UCX07-23
	–	7 9/32	3 15/16	1 13/32	5 35/64	29/32	5/8	25/32	1 15/16	1.890	0.748	3/4	UCFL307	FL307	UC307
		185	100	36	141	23	16	20	49	48	19	M20			
	1 1/2												UCFL208-24		UC208-24
	1 9/16	6 7/8	3 15/16	1 13/32	5 43/64	5/8	9/16	53/64	2 1/32	1.937	0.748	1/2	UCFL208-25	FL208	UC208-25
		175	100	36	144	16	14	21	51.2	49.2	19	M14	UCFL208		UC208
40	1 1/2	7 1/16	4 3/8	1 9/16	5 53/64	5/8	9/16	55/64	2 1/16	1.937	0.748	1/2	UCFLX08-24	FLX08	UCX08-24
		179	111	40	148	16	14	22	52.2	49.2	19	M14	UCFLX08		UCX08
	1 1/2	7 7/8	4 13/32	1 9/16	6 7/32	29/32	21/32	29/32	2 7/32	2.047	0.748	3/4	UCFL308-24	FL308	UC308-24
		200	112	40	158	23	17	23	56	52	19	M20	UCFL308		UC308
	1 5/8												UCFL209-26		UC209-26
	1 11/16	7 13/32	4 1/4	1 1/2	5 53/64	3/4	19/32	55/64	2 1/16	1.937	0.748	5/8	UCFL209-27	FL209	UC209-27
	1 3/4	188	108	38	148	19	15	22	52.2	49.2	19	M16	UCFL209-28		UC209-28
45													UCFL209		UC209
	1 3/4	7 7/16	4 9/16	1 9/16	6 3/16	5/8	9/16	29/32	2 3/16	2.031	0.748	1/2	UCFLX09-28	FLX09	UCX09-28
		189	116	40	157	16	14	23	55.6	51.6	19	M14	UCFLX09		UCX09

Remarks 1. In Part No. of unit and units with covers, fitting codes follow bore diameter numbers. (See **Table 10.5** in P.51.)
2. Part No. of applicable grease nipples are shown below.
A-1/4-28UNF ..... 201~210, X05~X09, 305~308
A-PT1/8 ..... 211~218, X10, 309~326

With Pressed Steel Cover

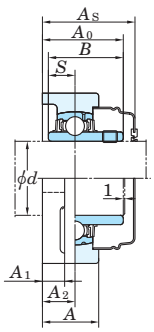

With Cast Iron Cover

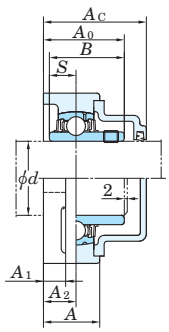

Variations of tolerance of distance from mounting surface to center of spherical bore (Δ_{A2s}) and tolerance of position of bolt hole (X)

Unit : mm

Housing No.			Δ_{A2s}	X
FL204~FL210	FLX05~FLX10	FL305~FL310	±0.5	0.7
FL211~FL218		FL311~FL326	±0.8	1

Variations of tolerance of bolt hole diameter (Δ_{Ns})

Unit : mm

Housing No.			Δ_{Ns}
FL204~FL218	FLX05~FLX10	FL305~FL311	±0.2
		FL312~FL326	±0.3

Forms and dimensions of L_c of FL204JE3 and FL205JE3 (housing with cast iron cover) are shown below.

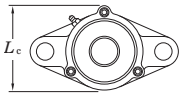

FL204JE3 L_c = 65 mm
FL205JE3 L_c = 73 mm

Mass	Basic Load Ratings kN		Factor	With Pressed Steel Cover					With Cast Iron Cover				
				Unit No.		Dimension mm	inch	Mass	Unit No.		Dimension mm	inch	Mass
kg	C_r	C_{0r}	f_0	Open End Type	Closed End Type	A_s		kg	Open End Type	Closed End Type	A_c		kg
0.50				UCFL201C	UCFL201D	37	1 15/32	0.50	–	–	–	–	–
0.50				–	–	–	–	–	–	–	–	–	–
0.48				UCFL202C	UCFL202D	37	1 15/32	0.48	–	–	–	–	–
0.48	12.8	6.65	13.2	–	–	–	–	–	–	–	–	–	–
0.47				UCFL203C	UCFL203D	37	1 15/32	0.47	–	–	–	–	–
0.47				–	–	–	–	–	–	–	–	–	–
0.45				UCFL204C	UCFL204D	37	1 15/32	0.45	UCFL204FC	UCFL204FD	46	1 13/16	0.6
0.64				–	–	–	–	–	–	–	–	–	–
0.64	14.0	7.85	13.9	–	–	–	–	–	–	–	–	–	–
0.64				UCFL205C	UCFL205D	40	1 9/16	0.64	UCFL205FC	UCFL205FD	49	1 15/16	0.83
0.64				–	–	–	–	–	–	–	–	–	–
1.1	19.5	11.3	13.9	UCFLX05C	UCFLX05D	44	1 23/32	1.1	–	–	–	–	–
1.1				–	–	–	–	–	–	–	–	–	–
1.1	21.2	10.9	12.6	–	–	–	–	–	UCFL305C	UCFL305D	54	2 1/8	1.4
1.1				–	–	–	–	–	–	–	–	–	–
0.93				–	–	–	–	–	–	–	–	–	–
0.93	19.5	11.3	13.9	UCFL206C	UCFL206D	44	1 23/32	0.93	UCFL206FC	UCFL206FD	53	2 3/32	1.2
0.93				–	–	–	–	–	–	–	–	–	–
0.93				–	–	–	–	–	–	–	–	–	–
1.5				UCFLX06C	UCFLX06D	49	1 15/16	1.5	–	–	–	–	–
1.5	25.7	15.4	13.9	–	–	–	–	–	–	–	–	–	–
1.5				–	–	–	–	–	–	–	–	–	–
1.5	26.7	15.0	13.3	–	–	–	–	–	UCFL306C	UCFL306D	59	2 5/16	1.8
1.2				–	–	–	–	–	–	–	–	–	–
1.2				–	–	–	–	–	–	–	–	–	–
1.2	25.7	15.4	13.9	–	–	–	–	–	–	–	–	–	–
1.2				UCFL207C	UCFL207D	49	1 15/16	1.2	UCFL207FC	UCFL207FD	58	2 9/32	1.6
1.2				–	–	–	–	–	–	–	–	–	–
1.9				–	–	–	–	–	–	–	–	–	–
1.9	29.1	17.8	14.0	UCFLX07C	UCFLX07D	55	2 5/32	1.9	–	–	–	–	–
1.9				–	–	–	–	–	–	–	–	–	–
1.8	33.4	19.3	13.2	–	–	–	–	–	UCFL307C	UCFL307D	64	2 17/32	2.2
1.6				–	–	–	–	–	–	–	–	–	–
1.6	29.1	17.8	14.0	–	–	–	–	–	–	–	–	–	–
1.6				UCFL208C	UCFL208D	55	2 5/32	1.6	UCFL208FC	UCFL208FD	64	2 17/32	2.0
2.1	34.1	21.3	14.0	–	–	–	–	–	–	–	–	–	–
2.1				UCFLX08C	UCFLX08D	56	2 7/32	2.1	–	–	–	–	–
2.5	40.7	24.0	13.2	–	–	–	–	–	–	–	–	–	–
2.5				–	–	–	–	–	UCFL308C	UCFL308D	71	2 25/32	3.0
1.9				–	–	–	–	–	–	–	–	–	–
1.9	34.1	21.3	14.0	–	–	–	–	–	–	–	–	–	–
1.9				–	–	–	–	–	–	–	–	–	–
1.9				UCFL209C	UCFL209D	56	2 7/32	1.9	UCFL209FC	UCFL209FD	66	2 19/32	2.3
2.4	35.1	23.3	14.4	–	–	–	–	–	–	–	–	–	–
2.4				UCFLX09C	UCFLX09D	60	2 3/8	2.4	–	–	–	–	–

3. As for the triple-lip seal type product (from 201 to 205 are the double-lip seal type products), supplementary code L3 (or L2) follows the Part No. of unit or bearing. (Example of Part No. : UCFL206JL3, UC206L3)
4. For the dimensions and forms of applicable bearings, see the dimensional tables of ball bearing for unit.

UCFL
Cylindrical bore (with set screws)
d (45) ~ (90) mm

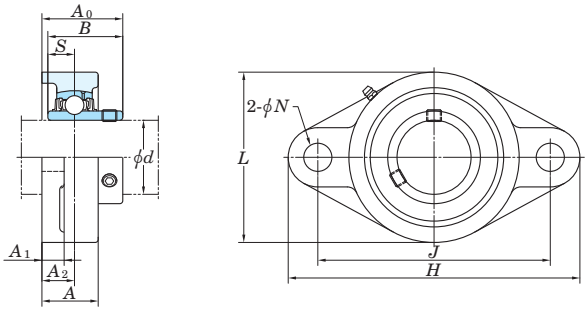

Shaft Dia. mm	Shaft Dia. inch	Dimensions inch / mm										Bolt Size inch / mm	Standard Unit No.	Standard Housing No.	Standard Bearing No.
d		H	L	A	J	N	A_1	A_2	A_0	B	S				
45	1 3/4	9 1/16	4 29/32	1 23/32	6 31/32	63/64	23/32	63/64	2 3/8	2.244	0.866	7/8	UCFL309-28	FL309	UC309-28
		230	125	44	177	25	18	25	60	57	22	M22	UCFL309		UC309
50	1 7/8	7 3/4	4 17/32	1 9/16	6 3/16	3/4	19/32	55/64	2 5/32	2.031	0.748	5/8	UCFL210-30	FL210	UC210-30
	1 15/16	197	115	40	157	19	15	22	54.6	51.6	19	M16	UCFL210-31		UC210-31
													UCFL210		UC210
	2												UCFL210-32		UC210-32
	1 15/16	8 1/2	5 1/4	1 23/32	7 1/4	3/4	25/32	1 1/32	2 11/32	2.189	0.874	5/8	UCFLX10-31	FLX10	UCX10-31
		216	133	44	184	19	20	26	59.4	55.6	22.2	M16	UCFLX10		UCX10
	2												UCFLX10-32		UCX10-32
	–	9 7/16	5 1/2	1 7/8	7 23/64	63/64	3/4	1 7/64	2 5/8	2.402	0.866	7/8	UCFL310	FL310	UC310
		240	140	48	187	25	19	28	67	61	22	M22			
55	2	8 13/16	5 1/8	1 11/16	7 1/4	3/4	23/32	63/64	2 5/16	2.189	0.874	5/8	UCFL211-32	FL211	UC211-32
	2 1/8	224	130	43	184	19	18	25	58.4	55.6	22.2	M16	UCFL211-34		UC211-34
													UCFL211		UC211
	2 3/16												UCFL211-35		UC211-35
	2	9 27/32	5 29/32	2 1/16	7 51/64	63/64	25/32	1 3/16	2 25/32	2.598	0.984	7/8	UCFL311-32	FL311	UC311-32
		250	150	52	198	25	20	30	71	66	25	M22	UCFL311		UC311
60	2 1/4	9 27/32	5 1/2	1 7/8	7 61/64	29/32	23/32	1 9/64	2 23/32	2.563	1.000	3/4	UCFL212-36	FL212	UC212-36
		250	140	48	202	23	18	29	68.7	65.1	25.4	M20	UCFL212		UC212
	2 3/8												UCFL212-38		UC212-38
	2 7/16												UCFL212-39		UC212-39
	–	10 5/8	6 5/16	2 7/32	8 11/32	1 7/32	7/8	1 19/64	3 1/16	2.795	1.024	1	UCFL312	FL312	UC312
		270	160	56	212	31	22	33	78	71	26	M27			
65	2 1/2	10 5/32	6 3/32	1 31/32	8 17/64	29/32	25/32	1 3/16	2 3/4	2.563	1.000	3/4	UCFL213-40	FL213	UC213-40
		258	155	50	210	23	20	30	69.7	65.1	25.4	M20	UCFL213		UC213
	2 1/2	11 5/8	6 7/8	2 9/32	9 29/64	1 7/32	31/32	1 19/64	3 1/16	2.953	1.181	1	UCFL313-40	FL313	UC313-40
		295	175	58	240	31	25	33	78	75	30	M27	UCFL313		UC313
70	2 3/4	10 7/16	6 5/16	2 1/8	8 1/2	29/32	25/32	1 7/32	2 31/32	2.937	1.189	3/4	UCFL214-44	FL214	UC214-44
		265	160	54	216	23	20	31	75.4	74.6	30.2	M20	UCFL214		UC214
	2 3/4	12 13/32	7 9/32	2 13/32	9 27/32	1 3/8	1 3/32	1 27/64	3 3/16	3.071	1.299	1 1/8	UCFL314-44	FL314	UC314-44
		315	185	61	250	35	28	36	81	78	33	M30	UCFL314		UC314
75	2 15/16	10 13/16	6 1/2	2 7/32	8 55/64	29/32	25/32	1 11/32	3 3/32	3.063	1.311	3/4	UCFL215-47	FL215	UC215-47
		275	165	56	225	23	20	34	78.5	77.8	33.3	M20	UCFL215		UC215
	3												UCFL215-48		UC215-48
	2 15/16	12 19/32	7 11/16	2 19/32	10 15/64	1 3/8	1 3/16	1 17/32	3 1/2	3.228	1.260	1 1/8	UCFL315-47	FL315	UC315-47
		320	195	66	260	35	30	39	89	82	32	M30	UCFL315		UC315
	3												UCFL315-48		UC315-48
80	3 1/8	11 13/32	7 3/32	2 9/32	9 11/64	63/64	25/32	1 11/32	3 9/32	3.252	1.311	7/8	UCFL216-50	FL216	UC216-50
		290	180	58	233	25	20	34	83.3	82.6	33.3	M22	UCFL216		UC216
	–	13 31/32	8 9/32	2 11/16	11 7/32	1 1/2	1 1/4	1 1/2	3 17/32	3.386	1.339	1 1/4	UCFL316	FL316	UC316
		355	210	68	285	38	32	38	90	86	34	M33			
85	3 1/4	12	7 15/32	2 15/32	9 49/64	63/64	7/8	1 27/64	3 7/16	3.374	1.343	7/8	UCFL217-52	FL217	UC217-52
		305	190	63	248	25	22	36	87.6	85.7	34.1	M22	UCFL217		UC217
	–	14 9/16	8 21/32	2 29/32	11 13/16	1 1/2	1 1/4	1 47/64	3 15/16	3.780	1.575	1 1/4	UCFL317	FL317	UC317
		370	220	74	300	38	32	44	100	96	40	M33			
90	3 1/2	12 19/32	8 1/16	2 11/16	10 7/16	63/64	29/32	1 37/64	3 25/32	3.780	1.563	7/8	UCFL218-56	FL218	UC218-56
		320	205	68	265	25	23	40	96.3	96	39.7	M22	UCFL218		UC218

Remarks 1. In Part No. of unit and units with covers, fitting codes follow bore diameter numbers. (See **Table 10.5** in P.51.)
2. Part No. of applicable grease nipples are shown below.
A-1/4-28UNF ..... 201~210, X05~X09, 305~308
A-PT1/8 ..... 211~218, X10, 309~326

With Pressed Steel Cover

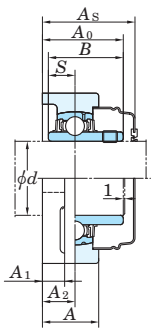

With Cast Iron Cover

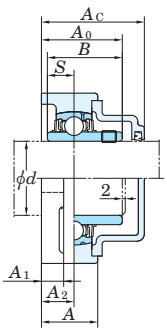

Variations of tolerance of distance from mounting surface to center of spherical bore (Δ_{A2s}) and tolerance of position of bolt hole (X)

Unit : mm

Housing No.			Δ_{A2s}	X
FL204~FL210	FLX05~FLX10	FL305~FL310	±0.5	0.7
FL211~FL218		FL311~FL326	±0.8	1

Variations of tolerance of bolt hole diameter (Δ_{Ns})

Unit : mm

Housing No.			Δ_{Ns}
FL204~FL218	FLX05~FLX10	FL305~FL311	±0.2
		FL312~FL326	±0.3

Forms and dimensions of L_c of FL204JE3 and FL205JE3 (housing with cast iron cover) are shown below.

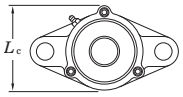

FL204JE3 L_c = 65 mm
FL205JE3 L_c = 73 mm

Mass	Basic Load Ratings kN		Factor	With Pressed Steel Cover					With Cast Iron Cover				
				Unit No.		Dimension mm	inch	Mass	Unit No.		Dimension mm	inch	Mass
				Open End Type	Closed End Type	A_s			Open End Type	Closed End Type	A_c		
kg	C_r	C_{0r}	f_0					kg					kg
3.5	48.9	29.5	13.3	–	–	–	–	–	–	–	–	–	–
3.5				–	–	–	–	–	UCFL309C	UCFL309D	76	3	4.1
2.2	35.1	23.3	14.4	–	–	–	–	–	–	–	–	–	–
2.2				–	–	–	–	–	–	–	–	–	–
2.2				UCFL210C	UCFL210D	59	2 5/16	2.2	UCFL210FC	UCFL210FD	70.5	2 25/32	2.7
2.2				–	–	–	–	–	–	–	–	–	–
3.8	43.4	29.4	14.4	–	–	–	–	–	–	–	–	–	–
3.8				UCFLX10C	UCFLX10D	64	2 17/32	3.8	–	–	–	–	–
3.8				–	–	–	–	–	–	–	–	–	–
4.4	62.0	38.3	13.2	–	–	–	–	–	UCFL310C	UCFL310D	83	3 9/32	5.2
3.3	43.4	29.4	14.4	–	–	–	–	–	–	–	–	–	–
3.3				–	–	–	–	–	–	–	–	–	–
3.3				UCFL211C	UCFL211D	63	2 15/32	3.3	UCFL211FC	UCFL211FD	74.5	2 15/16	3.9
3.3				–	–	–	–	–	–	–	–	–	–
5.3	71.6	45.0	13.2	–	–	–	–	–	–	–	–	–	–
5.3				–	–	–	–	–	UCFL311C	UCFL311D	87	3 7/16	6.2
4.2	52.4	36.2	14.4	–	–	–	–	–	–	–	–	–	–
4.2				UCFL212C	UCFL212D	73	2 7/8	4.2	UCFL212FC	UCFL212FD	86	3 3/8	5.0
4.2				–	–	–	–	–	–	–	–	–	–
4.2				–	–	–	–	–	–	–	–	–	–
6.5	81.9	52.2	13.2	–	–	–	–	–	UCFL312C	UCFL312D	95	3 3/4	7.7
5.1	57.2	40.1	14.4	–	–	–	–	–	–	–	–	–	–
5.1				UCFL213C	UCFL213D	74	2 29/32	5.1	UCFL213FC	UCFL213FD	87	3 7/16	5.9
8.5	92.7	59.9	13.2	–	–	–	–	–	–	–	–	–	–
8.5				–	–	–	–	–	UCFL313C	UCFL313D	94	3 11/16	9.6
5.7	62.2	44.1	14.5	–	–	–	–	–	–	–	–	–	–
5.7				UCFL214C	UCFL214D	80	3 5/32	5.7	UCFL214FC	UCFL214FD	93	3 21/32	6.6
9.7	104	68.2	13.2	–	–	–	–	–	–	–	–	–	–
9.7				–	–	–	–	–	UCFL314C	UCFL314D	98	3 27/32	10.8
6.4	67.4	48.3	14.5	–	–	–	–	–	–	–	–	–	–
6.4				UCFL215C	UCFL215D	83	3 9/32	6.4	UCFL215FC	UCFL215FD	96	3 25/32	7.4
6.4				–	–	–	–	–	–	–	–	–	–
11.3	113	77.2	13.2	–	–	–	–	–	–	–	–	–	–
11.3				–	–	–	–	–	UCFL315C	UCFL315D	106	4 3/16	12.6
11.3				–	–	–	–	–	–	–	–	–	–
7.8	72.7	53.0	14.6	–	–	–	–	–	–	–	–	–	–
7.8				UCFL216C	UCFL216D	88	3 15/32	7.8	UCFL216FC	UCFL216FD	103	4 1/16	9.0
14.4	123	86.7	13.3	–	–	–	–	–	UCFL316C	UCFL316D	107	4 7/32	15.8
9.8	84.0	61.9	14.5	–	–	–	–	–	–	–	–	–	–
9.8				UCFL217C	UCFL217D	92	3 5/8	9.8	UCFL217FC	UCFL217FD	107	4 7/32	11.2
16.0	133	96.8	13.3	–	–	–	–	–	UCFL317C	UCFL317D	117	4 19/32	17.6
12.3	96.1	71.5	14.5	–	–	–	–	–	–	–	–	–	–
12.3				UCFL218C	UCFL218D	101	3 31/32	12.3	UCFL218FC	UCFL218FD	116	4 9/16	13.8

3. As for the triple-lip seal type product (from 201 to 205 are the double-lip seal type products), supplementary code L3 (or L2) follows the Part No. of unit or bearing. (Example of Part No. : UCFL206JL3, UC206L3)
4. For the dimensions and forms of applicable bearings, see the dimensional tables of ball bearing for unit.

UCFL
Cylindrical bore (with set screws)
d (90) ~ 130 mm

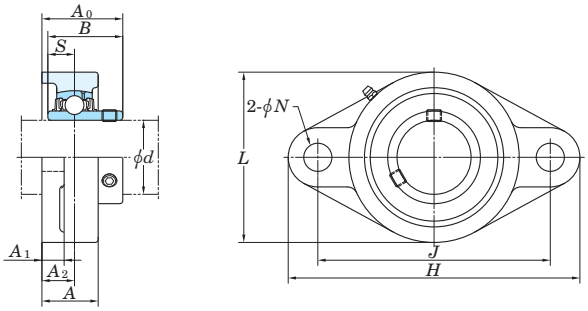

Shaft Dia. mm	Shaft Dia. inch	Dimensions inch / mm										Bolt Size inch / mm	Standard Unit No.	Standard Housing No.	Standard Bearing No.
d		H	L	A	J	N	A_1	A_2	A_0	B	S				
90	3 1/2	15 5/32 385	9 1/4 235	3 76	12 13/32 315	1 1/2 38	1 13/32 36	1 47/64 44	3 15/16 100	3.780 96	1.575 40	1 1/4 M33	**UCFL318-56** **UCFL318**	FL318	UC318-56 UC318
95	–	15 15/16 405	9 27/32 250	3 11/16 94	13 330	1 39/64 41	1 9/16 40	2 21/64 59	4 3/4 121	4.055 103	1.614 41	1 3/8 M36	**UCFL319**	FL319	UC319
100	3 15/16 4	17 5/16 440	10 5/8 270	3 11/16 94	14 11/64 360	1 47/64 44	1 9/16 40	2 21/64 59	4 29/32 125	4.252 108	1.654 42	1 1/2 M39	**UCFL320** **UCFL320-63** **UCFL320-64**	FL320	UC320 UC320-63 UC320-64
110	–	18 1/2 470	11 13/16 300	3 25/32 96	15 23/64 390	1 47/64 44	1 21/32 42	2 23/64 60	5 5/32 131	4.606 117	1.811 46	1 1/2 M39	**UCFL322**	FL322	UC322
120	–	20 15/32 520	13 330	4 11/32 110	16 59/64 430	1 27/32 47	1 7/8 48	2 9/16 65	5 1/2 140	4.961 126	2.008 51	1 5/8 M42	**UCFL324**	FL324	UC324
130	–	21 21/32 550	14 3/16 360	4 17/32 115	18 7/64 460	1 27/32 47	1 31/32 50	2 9/16 65	5 3/4 146	5.315 135	2.126 54	1 5/8 M42	**UCFL326**	FL326	UC326

Remarks 1. In Part No. of unit and units with covers, fitting codes follow bore diameter numbers. (See **Table 10.5** in P.51.)
2. Part No. of applicable grease nipples are shown below.
A-1/4-28UNF ..... 201~210, X05~X09, 305~308
A-PT1/8 ..... 211~218, X10, 309~326

With Pressed Steel Cover

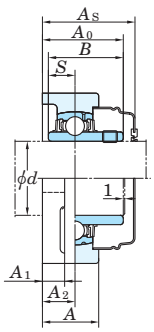

With Cast Iron Cover

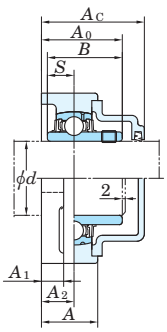

Variations of tolerance of distance from mounting surface to center of spherical bore (Δ_{A2s}) and tolerance of position of bolt hole (X)

Unit : mm

Housing No.			Δ_{A2s}	X
FL204~FL210	FLX05~FLX10	FL305~FL310	±0.5	0.7
FL211~FL218		FL311~FL326	±0.8	1

Variations of tolerance of bolt hole diameter (Δ_{Ns})

Unit : mm

Housing No.			Δ_{Ns}
FL204~FL218	FLX05~FLX10	FL305~FL311	±0.2
		FL312~FL326	±0.3

Forms and dimensions of L_c of FL204JE3 and FL205JE3 (housing with cast iron cover) are shown below.

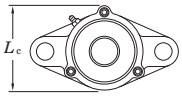

FL204JE3 L_c = 65 mm
FL205JE3 L_c = 73 mm

Mass	Basic Load Ratings kN		Factor	With Pressed Steel Cover					With Cast Iron Cover				
				Unit No.		Dimension mm	inch	Mass	Unit No.		Dimension mm	inch	Mass
kg	C_r	C_{0r}	f_0	Open End Type	Closed End Type	A_s		kg	Open End Type	Closed End Type	A_c		kg
19.0	143	107	13.3	–	–	–	–	–	–	–	–	–	–
19.0				–	–	–	–	–	UCFL318C	UCFL318D	119	4 11/16	20.9
24.6	153	119	13.3	–	–	–	–	–	UCFL319C	UCFL319D	140	5 1/2	26.8
29.4	173	141	13.2	–	–	–	–	–	UCFL320C	UCFL320D	146	5 3/4	32.2
29.4				–	–	–	–	–	–	–	–	–	–
29.4				–	–	–	–	–	–	–	–	–	–
36.2	205	180	13.2	–	–	–	–	–	UCFL322C	UCFL322D	154	6 1/16	39.6
51.6	207	185	13.5	–	–	–	–	–	UCFL324C	UCFL324D	163	6 13/32	56.4
61.6	229	214	13.6	–	–	–	–	–	UCFL326C	UCFL326D	172	6 25/32	67.7

3. As for the triple-lip seal type product (from 201 to 205 are the double-lip seal type products), supplementary code L3 (or L2) follows the Part No. of unit or bearing. (Example of Part No. : UCFL206JL3, UC206L3)
4. For the dimensions and forms of applicable bearings, see the dimensional tables of ball bearing for unit.

UCFL-E
Cylindrical bore (with set screws)
d 12 ~ 75 mm

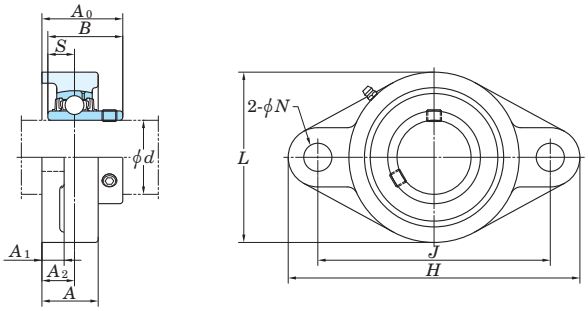

Shaft Dia. mm	Shaft Dia. inch	Dimensions inch / mm H	L	A	J	N	A1	A2	A0	B	S	Bolt Size inch	Unit No.	Housing No.	Bearing No.
12													UCFL201E		UC201
	1/2												UCFL201-8E		UC201-8
15		3 7/32	2 7/32	1	3	25/64	7/16	19/32	1 5/16	1.220	0.500	5/16	UCFL202E	FL203E	UC202
	5/8	98	56	25.5	76.2	10	11	15	33.3	31	12.7		UCFL202-10E		UC202-10
17													UCFL203E		UC203
20	3/4	4 7/16	2 3/8	1	3 17/32	25/64	7/16	19/32	1 5/16	1.220	0.500	5/16	UCFL204-12E	FL204E	UC204-12
		113	60	25.5	89.7	10	11	15	33.3	31	12.7		UCFL204E		UC204
	7/8												UCFL205-14E		UC205-14
25	15/16	5 1/8	2 11/16	1 1/16	3 57/64	15/32	1/2	5/8	1 13/32	1.343	0.563	3/8	UCFL205-15E	FL205E	UC205-15
		130	68	27	98.8	12	13	16	35.8	34.1	14.3		UCFL205E		UC205
	1												UCFL205-16E		UC205-16
	1 1/8												UCFL206-18E		UC206-18
30		5 13/16	3 5/32	1 7/32	4 19/32	15/32	1/2	45/64	1 19/32	1.500	0.626	3/8	UCFL206E	FL206E	UC206
	1 3/16	148	80	31	116.7	12	13	18	40.2	38.1	15.9		UCFL206-19E		UC206-19
	1 1/4												UCFL206-20E		UC206-20
	1 1/4												UCFL207-20E		UC207-20
	1 5/16												UCFL207-21E		UC207-21
35	1 3/8	6 11/32	3 17/32	1 11/32	5 1/8	33/64	9/16	3/4	1 3/4	1.689	0.689	7/16	UCFL207-22E	FL207E	UC207-22
		161	90	34	130.2	13	14	19	44.4	42.9	17.5		UCFL207E		UC207
	1 7/16												UCFL207-23E		UC207-23
	1 1/2												UCFL208-24E		UC208-24
40	1 9/16	6 7/8	3 15/16	1 13/32	5 21/32	33/64	9/16	53/64	2 1/32	1.937	0.748	7/16	UCFL208-25E	FL208E	UC208-25
		175	100	36	143.7	13	14	21	51.2	49.2	19		UCFL208E		UC208
	1 5/8												UCFL209-26E		UC209-26
45	1 11/16	7 13/32	4 1/4	1 1/2	5 27/32	19/32	19/32	55/64	2 1/16	1.937	0.748	1/2	UCFL209-27E	FL209E	UC209-27
	1 3/4	188	108	38	148.4	15	15	22	52.2	49.2	19		UCFL209-28E		UC209-28
													UCFL209E		UC209
	1 7/8												UCFL210-30E		UC210-30
50	1 15/16	7 3/4	4 17/32	1 9/16	6 3/16	19/32	19/32	55/64	2 5/32	2.031	0.748	1/2	UCFL210-31E	FL210E	UC210-31
		197	115	40	157	15	15	22	54.6	51.6	19		UCFL210E		UC210
	2												UCFL210-32E		UC210-32
	2												UCFL211-32E		UC211-32
55	2 1/8	8 13/16	5 1/8	1 11/16	7 1/4	21/32	23/32	63/64	2 5/16	2.189	0.874	9/16	UCFL211-34E	FL211E	UC211-34
		224	130	43	184	16.5	18	25	58.4	55.6	22.2		UCFL211E		UC211
	2 3/16												UCFL211-35E		UC211-35
	2 1/4												UCFL212-36E		UC212-36
60		9 27/32	5 1/2	1 7/8	7 61/64	21/32	23/32	1 9/64	2 23/32	2.563	1.000	9/16	UCFL212E	FL212E	UC212
	2 3/8	250	140	48	202	16.5	18	29	68.7	65.1	25.4		UCFL212-38E		UC212-38
	2 7/16												UCFL212-39E		UC212-39
65	2 1/2	10 5/32	6 3/32	1 31/32	8 17/64	21/32	25/32	1 3/16	2 3/4	2.563	1.000	9/16	UCFL213-40E	FL213E	UC213-40
		258	155	50	210	16.5	20	30	69.7	65.1	25.4		UCFL213E		UC213
70	2 3/4	10 7/16	6 5/16	2 1/8	8 1/2	21/32	25/32	1 7/32	2 31/32	2.937	1.189	9/16	UCFL214-44E	FL214E	UC214-44
		265	160	54	216	16.5	20	31	75.4	74.6	30.2		UCFL214E		UC214
	2 15/16												UCFL215-47E		UC215-47
75		10 13/16	6 1/2	2 7/32	8 55/64	3/4	25/32	1 11/32	3 3/32	3.063	1.311	11/16	UCFL215E	FL215E	UC215
	3	275	165	56	225	19	20	34	78.5	77.8	33.3		UCFL215-48E		UC215-48

Remarks 1. In Part No. of unit, fitting codes follow bore diameter numbers. (See **Table 10.5** in P.51.)
2. Part No. of applicable grease nipples are shown below.
A-1/4-28UNF ..... 201~210
A-PT1/8 ..... 211~217

Variations of tolerance of distance from mounting surface to center of spherical bore (Δ_{A2s}) and tolerance of position of bolt hole (X)

Unit : mm

Housing No.	Δ_{A2s}	X
FL203E~FL210E	±0.5	0.7
FL211E~FL217E	±0.8	1

Variations of tolerance of bolt hole diameter (Δ_{Ns})

Unit : mm

Housing No.	Δ_{Ns}
FL203E~FL217E	±0.2

	Basic Load Ratings kN		Factor	Mass
	C_r	C_{0r}	f_0	kg
	12.8	6.65	13.2	0.42 0.4 0.39
	12.8	6.65	13.2	0.48
	14.0	7.85	13.9	0.64
	19.5	11.3	13.9	0.93
	3	15.4	13.9	1.2
	29.1	17.8	14.0	1.6
	34.1	21.3	14.0	1.9
	35.1	23.3	14.4	2.2
	43.4	29.4	14.4	3.3
	52.4	36.2	14.4	4.2
	57.2	40.1	14.4	5.2
	62.2	44.1	14.5	5.7
	67.4	48.3	14.5	6.4

3. As for the triple-lip seal type product (from 201 to 205 are the double-lip seal type products), supplementary code L3 (or L2) follows the Part No. of unit or bearing. (Example of Part No. : UCFL206EJL3, UC206L3)
4. For the dimensions and forms of applicable bearings, see the dimensional tables of ball bearing for unit.

UCFL-E
Cylindrical bore (with set screws)
d 80 ~ 85 mm

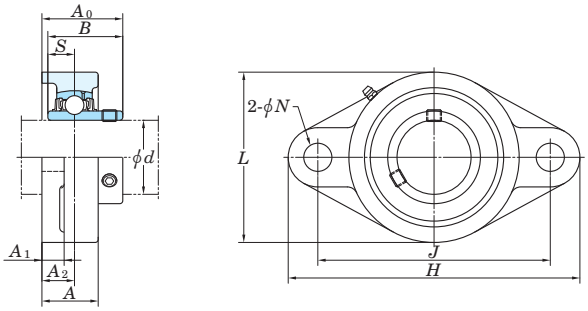

Shaft Dia. mm	Shaft Dia. inch	Dimensions inch / mm										Bolt Size inch	Unit No.	Housing No.	Bearing No.
d		H	L	A	J	N	A_1	A_2	A_0	B	S				
80	3 1/8	11 13/32	7 3/32	2 9/32	9 11/64	3/4	25/32	1 11/32	3 9/32	3.252	1.311	11/16	**UCFL216-50E**	FL216E	UC216-50
		290	180	58	233	19	20	34	83.3	82.6	33.3		**UCFL216E**		UC216
85	3 1/4	12	7 15/32	2 15/32	9 49/64	3/4	7/8	1 27/64	3 7/16	3.374	1.343	11/16	**UCFL217-52E**	FL217E	UC217-52
		305	190	63	248	19	22	36	87.6	85.7	34.1		**UCFL217E**		UC217

Remarks 1. In Part No. of unit, fitting codes follow bore diameter numbers. (See **Table 10.5** in P.51.)
2. Part No. of applicable grease nipples are shown below.
A-1/4-28UNF ..... 201~210
A-PT1/8 ..... 211~217

Variations of tolerance of distance from mounting surface to center of spherical bore (Δ_{A2s}) and tolerance of position of bolt hole (X)

Unit : mm

Housing No.	Δ_{A2s}	X
FL203E~FL210E	±0.5	0.7
FL211E~FL217E	±0.8	1

Variations of tolerance of bolt hole diameter (Δ_{Ns})

Unit : mm

Housing No.	Δ_{Ns}
FL203E~FL217E	±0.2

	Basic Load Ratings kN		Factor	Mass
	C_r	C_{0r}	f_0	kg
	72.7	53.0	14.6	7.8
	84.0	61.9	14.5	9.8

3. As for the triple-lip seal type product (from 201 to 205 are the double-lip seal type products), supplementary code L3 (or L2) follows the Part No. of unit or bearing. (Example of Part No. : UCFL206EJL3, UC206L3)
4. For the dimensions and forms of applicable bearings, see the dimensional tables of ball bearing for unit.

NANFL
Cylindrical bore
(with eccentric locking collar)
d 12 ~ 55 mm

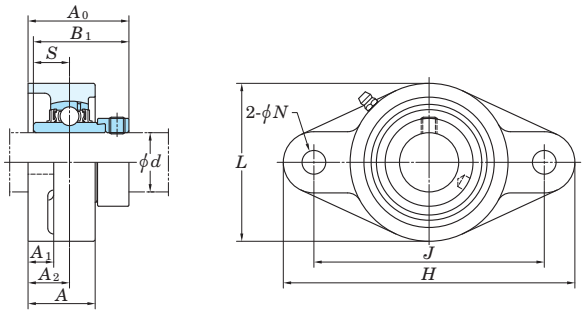

Shaft Dia mm	Shaft Dia inch	Dimensions inch / mm H	L	A	J	N	A1	A2	A0	B1	S	Bolt Size inch	Unit No.	Housing No.	Bearing No.
12													NANFL201		NA201
	1/2												NANFL201-8		NA201-8
15													NANFL202		NA202
	5/8	4 7/16 113	2 3/8 60	1 5/32 29.5	3 17/32 89.7	25/64 10	7/16 11	3/4 19	1 25/32 45.6	1.720 43.7	0.673 17.1	5/16	NANFL202-10	NFL204	NA202-10
17													NANFL203		NA203
	3/4												NANFL204-12		NA204-12
20													NANFL204		NA204
	7/8												NANFL205-14		NA205-14
25	15/16	5 1/8 130	2 11/16 68	1 7/32 31	3 57/64 98.8	15/32 12	1/2 13	25/32 20	1 27/32 46.9	1.748 44.4	0.689 17.5	3/8	NANFL205-15	NFL205	NA205-15
	1												NANFL205		NA205
													NANFL205-16		NA205-16
	1 1/8												NANFL206-18		NA206-18
30		5 13/16 148	3 5/32 80	1 11/32 34	4 19/32 116.7	15/32 12	1/2 13	53/64 21	2 51.1	1.906 48.4	0.720 18.3	3/8	NANFL206	NFL206	NA206
	1 3/16												NANFL206-19		NA206-19
	1 1/4												NANFL206-20		NA206-20
	1 1/4												NANFL207-20		NA207-20
	1 5/16												NANFL207-21		NA207-21
35	1 3/8	6 11/32 161	3 17/32 90	1 7/16 36.5	5 1/8 130.2	33/64 13	9/16 14	27/32 21.5	2 1/8 53.8	2.012 51.1	0.740 18.8	7/16	NANFL207-22	NFL207	NA207-22
													NANFL207		NA207
	1 7/16												NANFL207-23		NA207-23
40	1 1/2 1 9/16	6 7/8 175	3 15/16 100	1 17/32 39	5 21/32 143.7	33/64 13	9/16 14	15/16 24	2 5/16 58.9	2.217 56.3	0.843 21.4	7/16	NANFL208-24 NANFL208-25 NANFL208	NFL208	NA208-24 NA208-25 NA208
	1 5/8												NANFL209-26		NA209-26
45	1 11/16 1 3/4	7 13/32 188	4 1/4 108	1 9/16 40	5 27/32 148.4	19/32 15	9/16 14	15/16 24	2 5/16 58.9	2.217 56.3	0.843 21.4	1/2	NANFL209-27 NANFL209-28 NANFL209	NFL209	NA209-27 NA209-28 NA209
	1 7/8												NANFL210-30		NA210-30
50	1 15/16	7 3/4 197	4 17/32 115	1 27/32 46.5	6 3/16 157	19/32 15	9/16 14	1 1/8 28.5	2 5/8 66.6	2.469 62.7	0.969 24.6	1/2	NANFL210-31 NANFL210	NFL210	NA210-31 NA210
	2												NANFL210-32		NA210-32
	2												NANFL211-32		NA211-32
55	2 1/8	8 13/16 224	5 1/8 130	1 31/32 50	7 1/4 184	21/32 16.5	25/32 20	1 17/64 32	2 31/32 75.6	2.811 71.4	1.094 27.8	9/16	NANFL211-34 NANFL211	NFL211	NA211-34 NA211
	2 3/16												NANFL211-35		NA211-35

Remarks 1. In Part No. of unit and units with covers, fitting codes follow bore diameter numbers. (See **Table 10.5** in P.51.)
2. Part No. of applicable grease nipples are shown below.
A-1/4-28UNF ..... 201~210
A-PT1/8 211

Variations of tolerance of distance from mounting surface to center of spherical bore (Δ_{A2s}) and tolerance of position of bolt hole (X)

Unit : mm

Housing No.	Δ_{A2s}	X
NFL204~NFL210	±0.5	0.7
NFL211	±0.8	1

Variations of tolerance of bolt hole diameter (Δ_{Ns})

Unit : mm

Housing No.	Δ_{Ns}
NFL204~NFL211	±0.2

	Basic Load Ratings kN		Factor	Mass
	C_r	C_{0r}	f_0	kg
	12.8	6.65	13.2	0.59
	14.0	7.85	13.9	0.9
	19.5	11.3	13.9	1.1
	3	15.4	13.9	1.6
	29.1	17.8	14.0	2
	34.1	21.3	14.0	2.3
	35.1	23.3	14.4	2.7
	43.4	29.4	14.4	4.1

3. For the dimensions and forms of applicable bearings, see the dimensional tables of ball bearing for unit.

UKFL
Tapered bore (with adapter)
d_1 20 ~ (50) mm

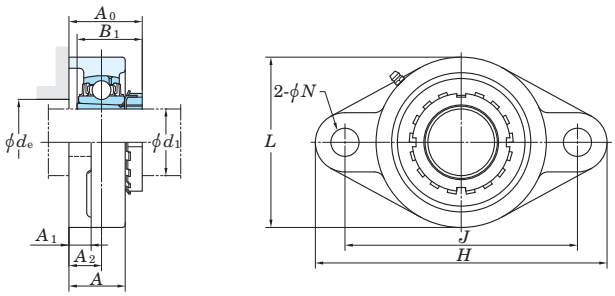

Shaft Dia. mm	Shaft Dia. inch	Dimensions inch / mm H	L	A	J	N	A1	A2	A0 1)	B1 1)	de (min.)	Bolt Size inch / mm	Standard Unit No.	Housing No.	Bearing No.
20	3/4	5 1/8 130	2 11/16 68	1 1/16 27	3 57/64 99	5/8 16	1/2 13	5/8 16	1 11/32(1 13/32) 34.5(36)	1 5/32(1 3/8) 29(35)	1 3/16 30	1/2 M14	**UKFL205**	FL205	UK205
	3/4	5 9/16 141	3 9/32 83	1 3/16 30	4 39/64 117	15/32 12	1/2 13	45/64 18	1 15/32 37.5	1 3/8 35	1 3/16 30	3/8 M10	**UKFLX05**	FLX05	UKX05
	3/4	5 29/32 150	3 5/32 80	1 5/32 29	4 29/64 113	3/4 19	1/2 13	5/8 16	1 15/32 37.5	1 3/8 35	– –	5/8 M16	**UKFL305**	FL305	UK305
25	1	5 13/16 148	3 5/32 80	1 7/32 31	4 39/64 117	5/8 16	1/2 13	45/64 18	1 15/32(1 9/16) 37.5(39.5)	1 7/32(1 1/2) 31(38)	1 13/32 36	3/8 M14	**UKFL206**	FL206	UK206
	1	6 5/32 156	3 3/4 95	1 11/32 34	5 1/8 130	5/8 16	9/16 14	3/4 19	1 9/16 40	1 1/2 38	1 13/32 36	3/8 M14	**UKFLX06**	FLX06	UKX06
	1	7 3/32 180	3 17/32 90	1 1/4 32	5 9/32 134	29/32 23	19/32 15	45/64 18	1 5/8 41	1 1/2 38	– –	3/4 M20	**UKFL306**	FL306	UK306
30	1 1/8	6 11/32 161	3 17/32 90	1 11/32 34	5 1/8 130	5/8 16	9/16 14	3/4 19	1 5/8(1 11/16) 41(43)	1 3/8(1 11/16) 35(43)	1 5/8 41	3/8 M14	**UKFL207**	FL207	UK207
	1 1/8	6 23/32 171	4 1/8 105	1 1/2 38	5 43/64 144	5/8 16	9/16 14	53/64 21	1 23/32 43.5	1 11/16 43	1 5/8 41	3/8 M14	**UKFLX07**	FLX07	UKX07
	1 1/8	7 9/32 185	3 15/16 100	1 13/32 36	5 35/64 141	29/32 23	5/8 16	25/32 20	1 25/32 45.5	1 11/16 43	– –	3/4 M20	**UKFL307**	FL307	UK307
35	1 1/4 1 3/8	6 7/8 175	3 15/16 100	1 13/32 36	5 43/64 144	5/8 16	9/16 14	53/64 21	1 3/4(1 7/8) 44.5(48)	1 13/32(1 13/16) 36(46)	1 13/16 46	3/8 M14	**UKFL208**	FL208	UK208
	1 1/4 1 3/8	7 1/16 179	4 3/8 111	1 9/16 40	5 53/64 148	5/8 16	9/16 14	55/64 22	1 27/32 46.5	1 13/16 46	1 13/16 46	3/8 M14	**UKFLX08**	FLX08	UKX08
	1 1/4 1 3/8	7 7/8 200	4 13/32 112	1 9/16 40	6 7/32 158	29/32 23	21/32 17	29/32 23	2 50.5	1 13/16 46	– –	3/4 M20	**UKFL308**	FL308	UK308
40	1 1/2 1 5/8	7 13/32 188	4 1/4 108	1 1/2 38	5 53/64 148	3/4 19	19/32 15	55/64 22	1 7/8(2) 47.5(51)	1 17/32(1 31/32) 39(50)	2 1/16 52	5/8 M16	**UKFL209**	FL209	UK209
	1 1/2 1 5/8	7 7/16 189	4 9/16 116	1 9/16 40	6 3/16 157	5/8 16	9/16 14	29/32 23	1 29/32 48.5	1 31/32 50	2 1/16 52	3/8 M14	**UKFLX09**	FLX09	UKX09
	1 1/2 1 5/8	9 1/16 230	4 29/32 125	1 23/32 44	6 31/32 177	63/64 25	23/32 18	63/64 25	2 5/32 55	1 31/32 50	– –	7/8 M22	**UKFL309**	FL309	UK309
45	1 3/4	7 3/4 197	4 17/32 115	1 9/16 40	6 3/16 157	3/4 19	19/32 15	55/64 22	1 29/32(2 1/16) 48.5(52)	1 21/32(2 5/32) 42(55)	2 9/32 58	5/8 M16	**UKFL210**	FL210	UK210
	1 3/4	8 1/2 216	5 1/4 133	1 23/32 44	7 1/4 184	3/4 19	25/32 20	1 1/32 26	1 3/32 53.5	2 5/32 55	2 9/32 58	5/8 M16	**UKFLX10**	FLX10	UKX10
	1 3/4	9 7/16 240	5 1/2 140	1 7/8 48	7 23/64 187	63/64 25	3/4 19	1 7/64 28	2 3/8 60	2 5/32 55	– –	7/8 M22	**UKFL310**	FL310	UK310
50	1 7/8 2	8 13/16 224	5 1/8 130	1 11/16 43	7 1/4 184	3/4 19	23/32 18	63/64 25	2 1/16(2 1/4) 52.5(57)	1 25/32(2 5/16) 45(59)	2 17/32 64	5/8 M16	**UKFL211**	FL211	UK211

Note 1) Codes shown in parentheses indicate the dimensions and Part No. of applicable adapter (H2300X series) for UK200L3 series (triple-lip seal type).

Remarks 1. In Part No. of unit and units with covers, fitting codes follow bore diameter numbers. (See **Table 10.5** in P.51.)

2. Part No. of applicable grease nipples are shown below.
A-1/4-28UNF.....205~210, X05~X09, 305~308
A-PT1/8.....211~218, X10, 309~326

With Pressed Steel Cover

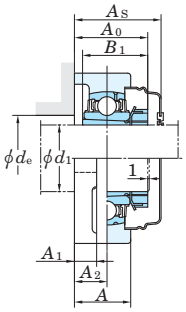

With Cast Iron Cover

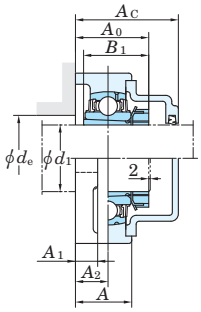

Variations of tolerance of distance from mounting surface to center of spherical bore (Δ_{A2s}) and tolerance of position of bolt hole (X) Unit : mm

Housing No.			Δ_{A2s}	X
FL205~FL210	FLX05~FLX10	FL305~FL310	±0.5	0.7
FL211~FL218		FL311~FL326	±0.8	1

Variations of tolerance of bolt hole diameter (Δ_{Ns}) Unit : mm

Housing No.			Δ_{Ns}
FL205~FL218	FLX05~FLX10	FL305~FL311	±0.2
		FL312~FL326	±0.3

Forms and dimensions of L_c of FL205JE3 (housing with cast iron cover) are shown below.

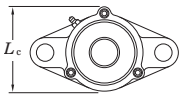

FL205JE3 L_c = 73 mm

Adapter[1] assembly No.	Mass kg	Basic Load Ratings kN C_r	C_{0r}	Factor f_0	With Pressed Steel Cover Unit No. Open End Type	Closed End Type	Dimension mm A_s	inch	Mass kg	With Cast Iron Cover Unit No. Open End Type	Closed End Type	Dimension mm A_c	inch	Mass kg
HE305X(HE2305X)	0.68	14.0	7.85	13.9	–	–	–	–	–	–	–	–	–	–
H305X(H2305X)	0.68				UKFL205C	UKFL205D	40	1 9/16	0.68	UKFL205FC	UKFL205FD	49	1 15/16	0.89
HE2305X	1.0	19.5	11.3	13.9	–	–	–	–	–	–	–	–	–	–
H2305X	1.0				UKFLX05C	UKFLX05D	44	1 23/32	1.0	–	–	–	–	–
HE2305X	1.1	21.2	10.9	12.6	–	–	–	–	–	–	–	–	–	–
H2305X	1.1				–	–	–	–	–	UKFL305C	UKFL305D	54	2 1/8	1.4
H306X(H2306X)	0.97	19.5	11.3	13.9	UKFL206C	UKFL206D	44	1 23/32	0.97	UKFL206FC	UKFL206FD	53	2 3/32	1.2
HE306X(HE2306X)	0.97				–	–	–	–	–	–	–	–	–	–
H2306X	1.5	25.7	15.4	13.9	UKFLX06C	UKFLX06D	49	1 15/16	1.5	–	–	–	–	–
HE2306X	1.5				–	–	–	–	–	–	–	–	–	–
H2306X	1.5	26.7	15.0	13.3	–	–	–	–	–	UKFL306C	UKFL306D	59	2 5/16	1.8
HE2306X	1.5				–	–	–	–	–	–	–	–	–	–
HS307X(HS2307X)	1.3	25.7	15.4	13.9	–	–	–	–	–	–	–	–	–	–
H307X(H2307X)	1.3				UKFL207C	UKFL207D	49	1 15/16	1.3	UKFL207FC	UKFL207FD	58	2 9/32	1.7
HS2307X	1.8	29.1	17.8	14.0	–	–	–	–	–	–	–	–	–	–
H2307X	1.8				UKFLX07C	UKFLX07D	55	2 5/32	1.8	–	–	–	–	–
HS2307X	1.9	33.4	19.3	13.2	–	–	–	–	–	–	–	–	–	–
H2307X	1.9				–	–	–	–	–	UKFL307C	UKFL307D	64	2 17/32	2.4
HE308X(HE2308X)	1.6				–	–	–	–	–	–	–	–	–	–
HS308X(HS2308X)	1.6	29.1	17.8	14.0	–	–	–	–	–	–	–	–	–	–
H308X(H2308X)	1.6				UKFL208C	UKFL208D	55	2 5/32	1.6	UKFL208FC	UKFL208FD	64	2 17/32	2.0
HE2308X	2.1				–	–	–	–	–	–	–	–	–	–
HS2308X	2.1	34.1	21.3	14.0	–	–	–	–	–	–	–	–	–	–
H2308X	2.1				UKFLX08C	UKFLX08D	56	2 7/32	2.1	–	–	–	–	–
HE2308X	2.5				–	–	–	–	–	–	–	–	–	–
HS2308X	2.5	40.7	24.0	13.2	–	–	–	–	–	–	–	–	–	–
H2308X	2.5				–	–	–	–	–	UKFL308C	UKFL308D	71	2 25/32	3.0
HE309X(HE2309X)	2.0				–	–	–	–	–	–	–	–	–	–
H309X(H2309X)	2.0	34.1	21.3	14.0	UKFL209C	UKFL209D	56	2 7/32	2.0	UKFL209FC	UKFL209FD	66	2 19/32	2.5
HS309X(HS2309X)	2.0				–	–	–	–	–	–	–	–	–	–
HE2309X	2.5				–	–	–	–	–	–	–	–	–	–
H2309X	2.5	35.1	23.3	14.4	UKFLX09C	UKFLX09D	60	2 3/8	2.5	–	–	–	–	–
HS2309X	2.5				–	–	–	–	–	–	–	–	–	–
HE2309X	3.6				–	–	–	–	–	–	–	–	–	–
H2309X	3.6	48.9	29.5	13.3	–	–	–	–	–	UKFL309C	UKFL309D	76	3	4.2
HS2309X	3.6				–	–	–	–	–	–	–	–	–	–
HE310X(HE2310X)	2.3	35.1	23.3	14.4	–	–	–	–	–	–	–	–	–	–
H310X(H2310X)	2.3				UKFL210C	UKFL210D	59	2 5/16	2.3	UKFL210FC	UKFL210FD	70.5	2 25/32	2.8
HE2310X	3.7	43.4	29.4	14.4	–	–	–	–	–	–	–	–	–	–
H2310X	3.7				UKFLX10C	UKFLX10D	64	2 17/32	3.7	–	–	–	–	–
HE2310X	4.4	62.0	38.3	13.2	–	–	–	–	–	–	–	–	–	–
H2310X	4.4				–	–	–	–	–	UKFL310C	UKFL310D	83	3 9/32	5.2
HS311X(HS2311X)	3.3				–	–	–	–	–	–	–	–	–	–
H311X(H2311X)	3.3	43.4	29.4	14.4	UKFL211C	UKFL211D	63	2 15/32	3.3	UKFL211FC	UKFL211FD	74.5	2 15/16	3.9
HE311X(HE2311X)	3.3				–	–	–	–	–	–	–	–	–	–

3. In Part No. of unit with adapters and bearing with adapters, Part No. of applicable adapter follow the Part No. shown in the dimensional tables. (Example of Part No. : UKFL206J + H306X, UK206 + H306X)
4. As for the triple-lip seal type product (205 is the double-lip seal type product), supplementary code L3 (or L2) follows the Part No. of unit or bearing. (Example of Part No. : UKFL206JL3 + H2306X, UK206L3 + H2306X)
5. For the dimensions and forms of applicable bearings and adapters, see the dimensional tables of ball bearing for unit and adapter assemblies.

UKFL
Tapered bore (with adapter)
d_1 (50) ~ 115 mm

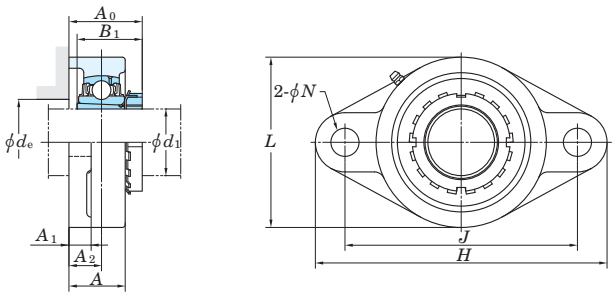

Shaft Dia. mm	Shaft Dia. inch	Dimensions inch / mm H	L	A	J	N	A1	A2	A0 1)	B1 1)	de (min.)	Bolt Size inch / mm	Standard Unit No.	Housing No.	Bearing No.
50	1 7/8	9 27/32	5 29/32	2 1/16	7 51/64	63/64	25/32	1 3/16	2 1/2	2 5/16	–	7/8	UKFL311	FL311	UK311
	2	250	150	52	198	25	20	30	63.5	59	–	M22			
55	2 1/8	9 27/32	5 1/2	1 7/8	7 61/64	29/32	23/32	1 9/64	2 5/16(2 19/32)	1 27/32(2 7/16)	2 23/32	3/4	UKFL212	FL212	UK212
		250	140	48	202	23	18	29	58.5(65.5)	47(62)	69	M20			
	2 1/8	10 5/8	6 5/16	2 7/32	8 11/32	1 7/32	7/8	1 19/64	2 3/4	2 7/16	–	1	UKFL312	FL312	UK312
		270	160	56	212	31	22	33	69.5	62	–	M27			
60	2 1/4	10 5/32	6 3/32	1 31/32	8 17/64	29/32	25/32	1 3/16	2 7/16(2 21/32)	1 31/32(2 9/16)	2 29/32	3/4	UKFL213	FL213	UK213
	2 3/8	258	155	50	210	23	20	30	62(67.5)	50(65)	74	M20			
	2 1/4	11 5/8	6 7/8	2 9/32	9 29/64	1 7/32	31/32	1 19/64	2 13/16	2 9/16	–	1	UKFL313	FL313	UK313
	2 3/8	295	175	58	240	31	25	33	71.5	65	–	M27			
65	2 1/2	10 13/16	6 1/2	2 7/32	8 55/64	29/32	25/32	1 11/32	2 23/32(2 15/16)	2 5/32(2 7/8)	3 11/32	3/4	UKFL215	FL215	UK215
		275	165	56	225	23	20	34	69(74.5)	55(73)	85	M20			
	2 1/2	12 19/32	7 11/16	2 19/32	10 15/64	1 3/8	1 3/16	1 17/32	2 7/32	2 7/8	–	1 1/8	UKFL315	FL315	UK315
		320	195	66	260	35	30	39	81.5	73	–	M30			
70	2 3/4	11 13/32	7 3/32	2 9/32	9 11/64	63/64	25/32	1 11/32	2 27/32(3 3/32)	2 5/16(3 1/16)	3 17/32	7/8	UKFL216	FL216	UK216
		290	180	58	233	25	20	34	72(78.5)	59(78)	90	M22			
	2 3/4	13 31/32	8 9/32	2 11/16	11 7/32	1 1/2	1 1/4	1 1/2	3 1/4	3 1/16	–	1 1/4	UKFL316	FL316	UK316
		355	210	68	285	38	32	38	82.5	78	–	M33			
75	3	12	7 15/32	2 15/32	9 49/64	63/64	7/8	1 27/64	3(3 1/4)	2 15/32(3 7/32)	3 25/32	7/8	UKFL217	FL217	UK217
		305	190	63	248	25	22	36	76(82.5)	63(82)	96	M22			
	3	14 9/16	8 21/32	2 29/32	11 13/16	1 1/2	1 1/4	1 47/64	3 5/8	3 7/32	–	1 1/4	UKFL317	FL317	UK317
		370	220	74	300	38	32	44	92	82	–	M33			
80	–	12 19/32	8 1/16	2 11/16	10 7/16	63/64	29/32	1 37/64	3 7/32(3 17/32)	2 9/16(3 3/8)	4 1/32	7/8	UKFL218	FL218	UK218
		320	205	68	265	25	23	40	82(89.5)	65(86)	102	M22			
	–	15 5/32	9 1/4	3	12 13/32	1 1/2	1 13/32	1 47/64	3 5/8	3 3/8	–	1 1/4	UKFL318	FL318	UK318
		385	235	76	315	38	36	44	92	86	–	M33			
85	3 1/4	15 15/16	9 27/32	3 11/16	13	1 39/64	1 9/16	2 21/64	4 3/8	3 17/32	–	1 3/8	UKFL319	FL319	UK319
		405	250	94	330	41	40	59	111	90	–	M36			
90	3 1/2	17 5/16	10 5/8	3 11/16	14 11/64	1 47/64	1 9/16	2 21/64	4 7/16	3 13/16	–	1 1/2	UKFL320	FL320	UK320
		440	270	94	360	44	40	59	113	97	–	M39			
100	4	18 1/2	11 13/16	3 25/32	15 23/64	1 47/64	1 21/32	2 23/64	4 23/32	4 1/8	–	1 1/2	UKFL322	FL322	UK322
		470	300	96	390	44	42	60	120	105	–	M39			
110	–	20 15/32	13	4 11/32	16 59/64	1 27/32	1 7/8	2 9/16	5 1/8	4 13/32	–	1 5/8	UKFL324	FL324	UK324
		520	330	110	430	47	48	65	130.5	112	–	M42			
115	4 1/2	21 21/32	14 3/16	4 17/32	18 7/64	1 27/32	1 31/32	2 9/16	5 3/16	4 3/4	–	1 5/8	UKFL326	FL326	UK326
		550	360	115	460	47	50	65	131.5	121	–	M42			

Note 1) Codes shown in parentheses indicate the dimensions and Part No. of applicable adapter (H2300X series) for UK200L3 series (triple-lip seal type).

Remarks 1. In Part No. of unit and units with covers, fitting codes follow bore diameter numbers. (See **Table 10.5** in P.51.)

2. Part No. of applicable grease nipples are shown below.
A-1/4-28UNF.....205~210, X05~X09, 305~308
A-PT1/8.....211~218, X10, 309~326

With Pressed Steel Cover

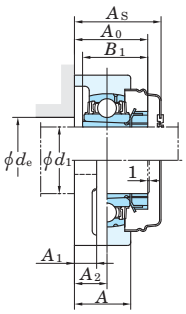

With Cast Iron Cover

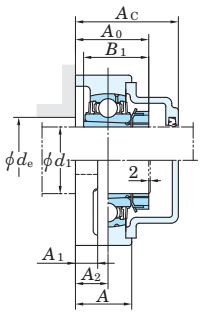

Variations of tolerance of distance from mounting surface to center of spherical bore (Δ_{A2s}) and tolerance of position of bolt hole (X) Unit : mm

Housing No.			Δ_{A2s}	X
FL205~FL210	FLX05~FLX10	FL305~FL310	±0.5	0.7
FL211~FL218		FL311~FL326	±0.8	1

Variations of tolerance of bolt hole diameter (Δ_{Ns}) Unit : mm

Housing No.			Δ_{Ns}
FL205~FL218	FLX05~FLX10	FL305~FL311	±0.2
		FL312~FL326	±0.3

Forms and dimensions of L_c of FL205JE3 (housing with cast iron cover) are shown below.

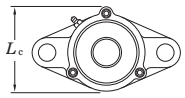

FL205JE3 L_c = 73 mm

Adapter[1] assembly No.	Mass	Basic Load Ratings kN		Factor	With Pressed Steel Cover					With Cast Iron Cover				
					Unit No.		Dimension mm	inch	Mass	Unit No.		Dimension mm	inch	Mass
	kg	C_r	C_{0r}	f_0	Open End Type	Closed End Type	A_s		kg	Open End Type	Closed End Type	A_c		kg
HS2311X	5.6				–	–	–	–	–	–	–	–	–	–
H2311X	5.6	71.6	45.0	13.2	–	–	–	–	–	UKFL311C	UKFL311D	87	3 7/16	6.5
HE2311X	5.6				–	–	–	–	–	–	–	–	–	–
HS312X(HS2312X)	4.1	52.4	36.2	14.4	–	–	–	–	–	–	–	–	–	–
H312X(H2313X)	4.1				UKFL212C	UKFL212D	73	2 7/8	4.1	UKFL212FC	UKFL212FD	86	3 3/8	4.9
HS2312X	6.9	81.9	52.2	13.2	–	–	–	–	–	–	–	–	–	–
H2312X	6.9				–	–	–	–	–	UKFL312C	UKFL312D	95	3 3/8	8.1
HE313X(HE2313X)	5.0				–	–	–	–	–	–	–	–	–	–
H313X(H2313X)	5.0	57.2	40.1	14.4	UKFL213C	UKFL213D	74	2 29/32	5.0	UKFL213FC	UKFL213FD	87	3 7/16	5.9
HS313X(HS2313X)	5.0				–	–	–	–	–	–	–	–	–	–
HE2313X	8.6				–	–	–	–	–	–	–	–	–	–
H2313X	8.6	92.7	59.9	13.2	–	–	–	–	–	UKFL313C	UKFL313D	94	3 11/16	9.7
HS2313X	8.6				–	–	–	–	–	–	–	–	–	–
HE315X(HE2315X)	6.6	67.4	48.3	14.5	–	–	–	–	–	–	–	–	–	–
H315X(H2315X)	6.6				UKFL215C	UKFL215D	83	3 9/32	6.6	UKFL215FC	UKFL215FD	96	3 25/32	7.6
HE2315X	11.4	113	77.2	13.2	–	–	–	–	–	–	–	–	–	–
H2315X	11.4				–	–	–	–	–	UKFL315C	UKFL315D	106	4 3/16	12.8
HE316X(HE2316X)	8.1	72.7	53.0	14.6	–	–	–	–	–	–	–	–	–	–
H316X(H2316X)	8.1				UKFL216C	UKFL216D	88	3 15/32	8.1	UKFL216FC	UKFL216FD	103	4 1/16	9.4
HE2316X	13.9	123	86.7	13.3	–	–	–	–	–	–	–	–	–	–
H2316X	13.9				–	–	–	–	–	UKFL316C	UKFL316D	107	4 7/32	15.5
H317X(H2317X)	9.9	84.0	61.9	14.5	UKFL217C	UKFL217D	92	3 5/8	9.9	UKFL217FC	UKFL217FD	107	4 7/32	11.3
HE317X(HE2317X)	9.9				–	–	–	–	–	–	–	–	–	–
H2317X	15.8	133	96.8	13.3	–	–	–	–	–	UKFL317C	UKFL317D	117	4 19/32	17.6
HE2317X	15.8				–	–	–	–	–	–	–	–	–	–
H318X(H2318X)	12.2	96.1	71.5	14.5	UKFL218C	UKFL218D	101	3 31/32	12.2	UKFL218FC	UKFL218FD	116	4 9/16	13.8
H2318X	19.1	143	107	13.3	–	–	–	–	–	UKFL318C	UKFL318D	119	4 11/16	21.2
HE2319X	24.9	153	119	13.3	–	–	–	–	–	–	–	–	–	–
H2319X	24.9				–	–	–	–	–	UKFL319C	UKFL319D	140	5 1/2	27.3
HE2320X	29.0	173	141	13.2	–	–	–	–	–	–	–	–	–	–
H2320X	29.0				–	–	–	–	–	UKFL320C	UKFL320D	146	5 3/4	32.1
H2322X	36.1	205	180	13.2	–	–	–	–	–	UKFL322C	UKFL322D	154	6 1/16	39.6
HE2322X	36.1				–	–	–	–	–	–	–	–	–	–
H2324	51.9	207	185	13.5	–	–	–	–	–	UKFL324C	UKFL324D	163	6 13/32	57.0
HE2326	61.4	229	214	13.6	–	–	–	–	–	–	–	–	–	–
H2326	61.4				–	–	–	–	–	UKFL326C	UKFL326D	172	6 25/32	68.0

3. In Part No. of unit with adapters and bearing with adapters, Part No. of applicable adapter follow the Part No. shown in the dimensional tables. (Example of Part No. : UKFL206J + H306X, UK206 + H306X)
4. As for the triple-lip seal type product (205 is the double-lip seal type product), supplementary code L3 (or L2) follows the Part No. of unit or bearing. (Example of Part No. : UKFL206JL3 + H2306X, UK206L3 + H2306X)
5. For the dimensions and forms of applicable bearings and adapters, see the dimensional tables of ball bearing for unit and adapter assemblies.

UCFA
Cylindrical bore (with set screws)
d 12 ~ 55 mm

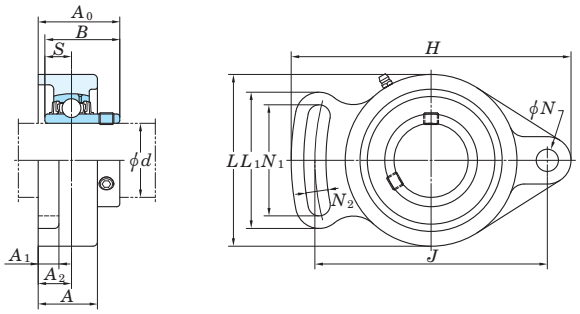

Shaft Dia. mm	Shaft Dia. inch	Dimensions inch / mm H	L	A	J	N	N_1	N_2	L_1	A_1	A_2	A_0	B	S	Bolt Size inch / mm	Unit No.	Housing No.	Bearing No.
12																UCFA201		UC201
	1/2															UCFA201-8		UC201-8
15																UCFA202		UC202
	5/8	3 27/32	2 5/16	15/16	3 5/64	25/64	1 9/16	13/32	1 31/32	7/16	35/64	1 1/4	1.220	0.500	5/16	UCFA202-10	FA204	UC202-10
		98	59	24	78	10	40	10	50	11	13.8	32.1	31	12.7	M8			
17																UCFA203		UC203
	3/4															UCFA204-12		UC204-12
20																UCFA204		UC204
	7/8															UCFA205-14		UC205-14
25	15/16	4 7/8	2 3/4	1 1/16	3 55/64	7/16	1 15/16	7/16	2 17/32	1/2	5/8	1 13/32	1.343	0.563	3/8	UCFA205-15	FA205	UC205-15
		124	70	27	98	11	49	11	64	13	16	35.8	34.1	14.3	M10	UCFA205		UC205
	1															UCFA205-16		UC205-16
	1 1/8															UCFA206-18		UC206-18
30		5 9/16	3 9/32	1 3/16	4 39/64	7/16	2 7/32	15/32	2 11/16	1/2	45/64	1 9/16	1.500	0.626	3/8	UCFA206	FA206	UC206
	1 3/16	141	83	30	117	11	56	12	68	13	17.8	40	38.1	15.9	M10	UCFA206-19		UC206-19
	1 1/4															UCFA206-20		UC206-20
	1 1/4															UCFA207-20		UC207-20
	1 5/16															UCFA207-21		UC207-21
35	1 3/8	6 3/32	3 25/32	1 11/32	5 1/8	33/64	2 15/32	1/2	2 15/16	9/16	47/64	1 23/32	1.689	0.689	7/16	UCFA207-22	FA207	UC207-22
		155	96	34	130	13	63	13	75	14	18.6	44	42.9	17.5	M12	UCFA207		UC207
	1 7/16															UCFA207-23		UC207-23
	1 1/2															UCFA208-24		UC208-24
40	1 9/16	6 23/32	4 1/8	1 1/2	5 43/64	33/64	2 3/4	1/2	3 5/16	9/16	13/16	2	1.937	0.748	7/16	UCFA208-25	FA208	UC208-25
		171	105	38	144	13	70	13	84	14	20.8	51	49.2	19	M12	UCFA208		UC208
	1 5/8															UCFA209-26		UC209-26
45	1 11/16	7 1/16	4 3/8	1 9/16	5 53/64	19/32	2 27/32	19/32	3 15/32	9/16	55/64	2 1/16	1.937	0.748	1/2	UCFA209-27	FA209	UC209-27
	1 3/4	179	111	40	148	15	72	15	88	14	21.8	52	49.2	19	M14	UCFA209-28		UC209-28
																UCFA209		UC209
	1 7/8															UCFA210-30		UC210-30
50	1 15/16	7 7/16	4 9/16	1 9/16	6 3/16	19/32	2 15/16	19/32	3 5/8	9/16	57/64	2 5/32	2.031	0.748	1/2	UCFA210-31	FA210	UC210-31
		189	116	40	157	15	75	15	92	14	22.5	55.1	51.6	19	M14	UCFA210		UC210
	2															UCFA210-32		UC210-32
	2															UCFA211-32		UC211-32
55	2 1/8	8 1/2	5 1/4	1 23/32	7 1/4	5/8	3 3/8	5/8	4 1/32	25/32	1 1/64	2 5/16	2.189	0.874	1/2	UCFA211-34	FA211	UC211-34
		216	133	44	184	16	86	16	102	20	25.7	59.1	55.6	22.2	M14	UCFA211		UC211
	2 3/16															UCFA211-35		UC211-35

Remarks 1. In Part No. of unit and units with covers, fitting codes follow bore diameter numbers. (See **Table 10.5** in P.51.)

2. Part No. of applicable grease nipples are shown below.
A-1/4-28UNF.....201~210
A-PT1/8.....211

Variations of tolerance of distance from mounting surface to center of spherical bore (Δ_{A2s})

Unit : mm

Housing No.	Δ_{A2s}
FA204~FA210	±0.5
FA211	±0.8

Variations of tolerance of bolt hole diameter (Δ_{Ns})

Unit : mm

Housing No.	Δ_{Ns}
FA204~FA211	±0.2

	Basic Load Ratings kN		Factor	Mass
	C_r	C_{0r}	f_0	kg
	12.8	6.65	13.2	0.47 0.45 0.44 0.42
	14.0	7.85	13.9	0.68
	19.5	11.3	13.9	1.0
	25.7	15.4	13.9	1.5
	29.1	17.8	14	1.9
	34.1	21.3	14	1.7
	35.1	23.3	14.4	2.0
	43.4	29.4	14.4	3.6

3. As for triple-lip seal type product (from 201 to 205 are the double-lip seal type products), supplementary code L3 (or L2) follows Part No. of unit or bearing. (Example of Part No. : UCFA206JL3, UC206L3)
4. For the dimensions and forms of applicable bearings, see the dimensional tables of ball bearing for unit.
5. Tapered bore (with adapter) type products are also available. (Example of Part No. : UKFA205J + H305X, UK205 + H305X)

UCFB
Cylindrical bore (with set screws)
d 12 ~ 50 mm

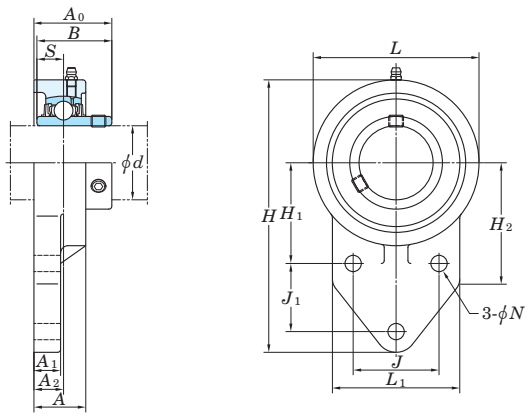

Shaft Dia. mm	Shaft Dia. inch	Dimensions inch / mm														Bolt Size inch / mm	Unit No.	Housing No.
d		H	L	A	J	J_1	N	H_1	H_2	L_1	A_1	A_2	A_0	B	S			
12																	UCFB201	
	1/2																UCFB201-8	
15		4 11/32	2 7/16	15/16	1 17/64	1 11/16	3/8	1 21/32	2 1/16	2 1/16	1/2	17/32	1 1/4	1.220	0.500	5/16	UCFB202	FB204
	5/8	110	62	24	32	27	9.5	42	52	52	13	13.5	31.8	31	12.7	M8	UCFB202-10	
17																	UCFB203	
	3/4																UCFB204-12	
20																	UCFB204	
	7/8																UCFB205-14	
25	15/16	4 9/16	2 11/16	1 1/32	1 11/32	1 1/16	3/8	1 49/64	2 1/16	2 7/32	1/2	19/32	1 3/8	1.343	0.563	5/16	UCFB205-15	FB205
		116	68	26	34	27	9.5	45	52	56	13	15	34.8	34.1	14.3	M8	UCFB205	
	1																UCFB205-16	
	1 1/8																UCFB206-18	
30		5 1/8	3 1/16	1 5/32	1 37/64	1 9/64	3/8	1 31/32	2 5/32	2 9/16	1/2	43/64	1 17/32	1.500	0.626	5/16	UCFB206	FB206
	1 3/16	130	78	29	40	29	9.5	50	55	65	13	17	39.2	38.1	15.9	M8	UCFB206-19	
	1 1/4																UCFB206-20	
	1 1/4																UCFB207-20	
	1 5/16																UCFB207-21	
35	1 3/8	5 21/32	3 17/32	1 5/16	1 13/16	1 17/64	3/8	2 11/64	2 7/16	2 3/4	19/32	3/4	1 3/4	1.689	0.689	5/16	UCFB207-22	FB207
		144	90	33	46	32	9.5	55	62	70	15	19	44.4	42.9	17.5	M8	UCFB207	
	1 7/16																UCFB207-23	
	1 1/2																UCFB208-24	
40	1 9/16	6 15/32	3 15/16	1 11/32	1 31/32	1 39/64	7/16	2 23/64	2 27/32	3 1/16	5/8	25/32	1 31/32	1.937	0.748	3/8	UCFB208-25	FB208
		164	100	34	50	41	11	60	72	78	16	20	50.2	49.2	19	M10	UCFB208	
	1 5/8																UCFB209-26	
45	1 11/16	6 27/32	4 3/16	1 11/32	2 1/8	1 11/16	7/16	2 9/16	3	3 5/32	23/32	25/32	1 31/32	1.937	0.748	3/8	UCFB209-27	FB209
	1 3/4	174	106	34	54	43	11	65	76	80	18	20	50.2	49.2	19	M10	UCFB209-28	
																	UCFB209	
	1 7/8																UCFB210-30	
50	1 15/16	7 1/4	4 13/32	1 3/8	2 9/32	1 13/16	7/16	2 43/64	3 7/32	3 3/8	23/32	25/32	2 1/16	2.031	0.748	3/8	UCFB210-31	FB210
		184	112	35	58	46	11	68	82	86	18	20	52.6	51.6	19	M10	UCFB210	
	2																UCFB210-32	

Remarks 1. In Part No. of unit and units with covers, fitting codes follow bore diameter codes. (See **Table 10.5** in P.51.)
2. Part No. of applicable grease nipple is A-1/4-28UNF.
3. As for the triple-lip seal type product (from 201 to 205 are the double-lip seal type products), supplementary code L3 (or L2) follows Part No. of unit or bearing. (Example of Part No. : UCFB206JL3, UC206L3)

Variations of tolerance of distance from mounting surface to center of spherical bore (Δ_{A2s}), variations of tolerance of distance between centers of bolt holes (Δ_{Js}, Δ_{J1s}), variations of tolerance of distance between both grooves (Δ_{H1s})

Unit : mm

Housing No.	Δ_{A2s}	Δ_{Js}	Δ_{J1s}	Δ_{H1s}
FB204~FB210	±0.5			

Variations of tolerance of bolt hole diameter (Δ_{Ns})

Unit : mm

Housing No.	Δ_{Ns}
FB204~FB210	±0.2

	Bearing No.	Basic Load Ratings kN C_r	C_{0r}	Factor f_0	Mass kg
	UC201 UC201-8 UC202 UC202-10 UC203 UC204-12 UC204	12.8	6.65	13.2	0.64 0.62 0.61 0.59
	UC205-14 UC205-15 UC205 UC205-16	14.0	7.85	13.9	0.68
	UC206-18 UC206 UC206-19 UC206-20	19.5	11.3	13.9	0.92
	UC207-20 UC207-21 UC207-22 UC207 UC207-23	25.7	15.4	13.9	1.3
	UC208-24 UC208-25 UC208	29.1	17.8	14.0	1.8
	UC209-26 UC209-27 UC209-28 UC209	34.1	21.3	14.0	2.0
	UC210-30 UC210-31 UC210 UC210-32	35.1	23.3	14.4	2.3

4. For the dimensions and forms of applicable bearings, see the dimensional tables of ball bearing for unit.
5. Tapered bore (with adapter) type products are also available. (Example of Part No. : UKFB205J + H305X, UK205 + H305X)

BLF
Cylindrical bore
(with set screws)
ALF
Cylindrical bore
(with eccentric locking collar)
d 12 ~ 35 mm

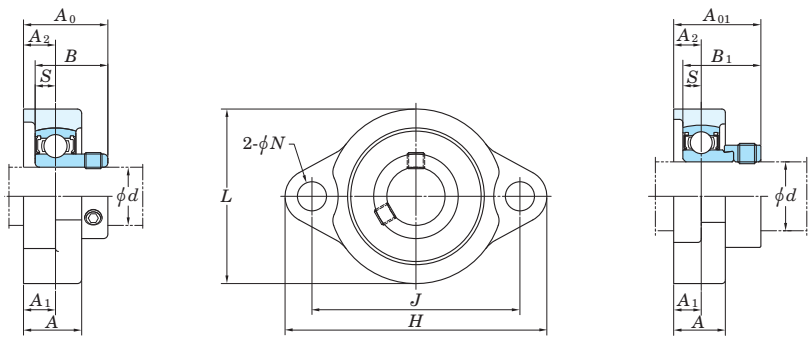

BLF ALF

Shaft Dia. mm	Shaft Dia. inch	Dimensions inch / mm												Bolt Size inch / mm	Unit No.	Bearing No.
										BLF		ALF				
d		H	L	A	J	N	A_1	A_2	S	A_0	B	A_{01}	B_1			
12															BLF201	SB201
	1/2	3 3/16	2 1/16	23/32	2 1/2	5/16	3/8	3/8	0.236	1	0.866	1 1/4	1.122	1/4	BLF201-8	SB201-8
15		81	52	18	63.5	8	9.5	9.5	6	25.5	22	32	28.5	M6	BLF202	SB202
	5/8														BLF202-10	SB202-10
17															BLF203	SB203
20	3/4	3 17/32	2 3/8	25/32	2 13/16	25/64	7/16	7/16	0.276	1 5/32	0.984	1 5/16	1.161	5/16	BLF204-12	SB204-12
		90	60	20	71.5	10	11	11	7	29	25	33.5	29.5	M8	BLF204	SB204
	7/8														BLF205-14	SB205-14
25	15/16	3 3/4	2 17/32	25/32	2 63/64	25/64	7/16	7/16	0.295	1 3/16	1.063	1 11/32	1.201	5/16	BLF205-15	SB205-15
		95	64	20	76	10	11	11	7.5	30.5	27	34	30.5	M8	BLF205	SB205
	1														BLF205-16	SB205-16
	1 1/8														BLF206-18	SB206-18
30		4 7/16	3	7/8	3 9/16	15/32	15/32	15/32	0.315	1 11/32	1.181	1 1/2	1.335	3/8	BLF206	SB206
	1 3/16	113	76	22.5	90.5	12	12	12	8	34	30	37.9	33.9	M10	BLF206-19	SB206-19
	1 1/4														BLF206-20	SB206-20
	1 1/4														BLF207-20	SB207-20
	1 5/16	4 13/16	3 1/2	15/16	3 15/16	15/32	1/2	33/64	0.335	1 7/16	1.260	1 5/8	1.437	3/8		
35	1 3/8	122	89	24	100	12	13	13	8.5	36.5	32	41	36.5	M10	BLF207-22	SB207-22
															BLF207	SB207
	1 7/16														BLF207-23	SB207-23

Remarks 1. In Part No. of unit and units with covers, fitting codes follow bore diameter codes. (See **Table 10.5** in P.51.)
2. Allowable load to housing in radial direction is approximately half of basic load rating of bearing, C_r (when safety factor is 4).
3. For the dimensions and forms of applicable bearings, see the dimensional tables of ball bearing for unit.

Variations of tolerance of distance from mounting surface to center of spherical bore (Δ_{A2s}) and variations of tolerance of distance between centers of bolt holes (Δ_{Js})

Unit : mm

Housing No.	Δ_{A2s}	Δ_{Js}
LF203~LF207	±0.5	±0.7

Variations of tolerance of bolt hole diameter (Δ_{Ns})

Unit : mm

Housing No.	Δ_{Ns}
LF203~LF207	±0.2

Unit No.	Bearing No.	Housing No.	Basic Load Ratings kN C_r	Basic Load Ratings kN C_{0r}	Factor f_0	Mass kg BLF	Mass kg ALF
ALF201	SA201	LF203	9.55	4.80	13.2	0.25	0.28
ALF201-8	SA201-8						
ALF202	SA202						
ALF202-10	SA202-10						
ALF203	SA203						
ALF204-12	SA204-12	LF204	12.8	6.65	13.2	0.33	0.33
ALF204	SA204						
ALF205-14	SA205-14	LF205	14.0	7.85	13.9	0.38	0.42
ALF205-15	SA205-15						
ALF205	SA205						
ALF205-16	SA205-16						
ALF206-18	SA206-18	LF206	19.5	11.3	13.9	0.57	0.60
ALF206	SA206						
ALF206-19	SA206-19						
ALF206-20	SA206-20						
ALF207-20	SA207-20	LF207	25.7	15.4	13.9	0.77	0.85
ALF207-21	SA207-21						
ALF207-22	SA207-22						
ALF207	SA207						
ALF207-23	SA207-23						

UFL
Cylindrical bore (with set screws)
d 8 ~ 30 mm

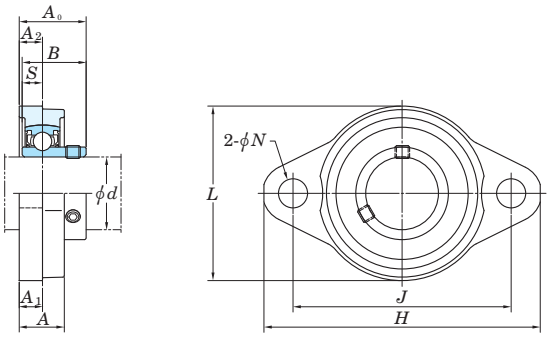

Shaft Dia. mm d	Dimensions inch / mm H	L	A	J	N	A_1	A_2	A_0	B	S	Bolt Size inch / mm	Standard Unit No.	Housing No.	Bearing No.
8	1 7/8	1 1/16	11/32	1 29/64	3/16	5/32	5/32	1/2	0.472	0.1378	No.8	UFL08	FL08	SU08
	48	27	8.5	37	4.8	4	4	12.5	12	3.5	M4			
10	2 3/8	1 13/32	15/32	1 49/64	9/32	1/4	15/64	5/8	0.591	0.197	1/4	UFL000	FL000	SU000
	60	36	12	45	7	6	6	16	15	5	M6			
12	2 15/32	1 1/2	15/32	1 57/64	9/32	1/4	15/64	5/8	0.591	0.197	1/4	UFL001	FL001	SU001
	63	38	12	48	7	6	6	16	15	5	M6			
15	2 5/8	1 21/32	1/2	2 3/32	9/32	1/4	1/4	11/16	0.650	0.217	1/4	UFL002	FL002	SU002
	67	42	13	53	7	6.5	6.5	17.5	16.5	5.5	M6			
17	2 25/32	1 13/16	9/16	2 13/64	9/32	9/32	9/32	23/32	0.689	0.236	1/4	UFL003	FL003	SU003
	71	46	14	56	7	7	7	18.5	17.5	6	M6			
20	3 17/32	2 5/32	5/8	2 51/64	13/32	5/16	5/16	7/8	0.827	0.276	5/16	UFL004	FL004	SU004
	90	55	16	71	10	8	8	22	21	7	M8			
25	3 3/4	2 3/8	5/8	2 61/64	13/32	5/16	5/16	29/32	0.866	0.276	5/16	UFL005	FL005	SU005
	95	60	16	75	10	8	8	23	22	7	M8			
30	4 13/32	2 3/4	23/32	3 11/32	1/2	11/32	23/64	1 1/32	0.965	0.295	3/8	UFL006	FL006	SU006
	112	70	18	85	13	9	9	26	24.5	7.5	M10			

Remarks 1. In Part No. of unit and units with covers, fitting codes follow bore diameter codes. (See **Table 10.5** in P.51.)
2. Housing is made from special light alloy.
3. For the dimensions and forms of applicable bearings, see the dimensional tables of ball bearing for unit.

Open End Type

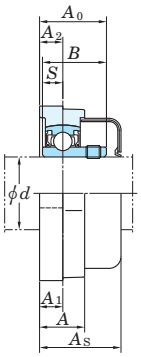

Closed End type

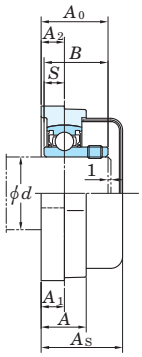

Variations of tolerance of distance from mounting surface to center of spherical bore (Δ_{A2s}) and variations of tolerance of distance between centers of bolt holes (Δ_{Js})

Unit : mm

Housing No.	Δ_{A2s}	Δ_{Js}
FL08	±0.5	±0.3
FL000~FL006		

Variations of tolerance of bolt hole diameter (Δ_{Ns})

Unit : mm

Housing No.	Δ_{Ns}
FL08	±0.2
FL000~FL006	

Mass	Basic Load Ratings kN		Factor	With Rubber Coated Cover Unit No.		Dimension mm	inch	Mass
kg	C_r	C_{0r}	f_0	Open End Type	Closed End Type	A_s		kg
0.030	3.27	1.37	12.4	–	–	–	–	–
0.050	4.55	1.95	12.3	UFL000C	UFL000D	20.5	13/16	0.050
0.065	5.10	2.40	13.2	UFL001C	UFL001D	20.5	13/16	0.065
0.085	5.60	2.85	13.9	UFL002C	UFL002D	22	7/8	0.085
0.11	6.00	3.25	14.4	UFL003C	UFL003D	23.5	15/16	0.11
0.18	9.40	5.05	13.9	UFL004C	UFL004D	27	1 1/16	0.18
0.23	10.1	5.85	14.5	UFL005C	UFL005D	28	1 3/32	0.23
0.31	13.2	8.25	14.7	UFL006C	UFL006D	31	1 7/32	0.31

UCSFL-H1S6
Cylindrical bore (with set screws)
d 20 ~ 50 mm

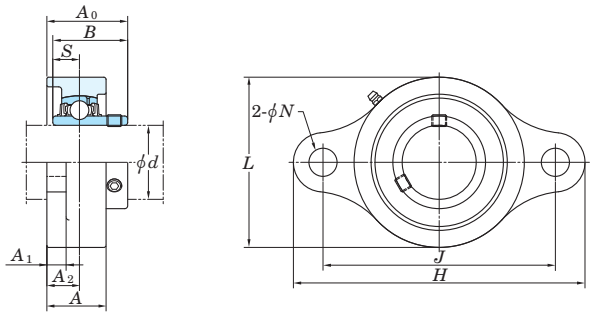

Shaft Dia. mm d	Dimensions inch / mm H	L	A	J	N	A_1	A_2	A_0	B	S	Bolt Size inch / mm	Standard Unit No.	Housing No.	Bearing No.
20	4 7/16 113	2 3/8 60	1 1/32 26	3 35/64 90	15/32 12	13/32 10	19/32 15	1 5/16 33.3	1.220 31	0.500 12.7	3/8 M10	**UCSFL204H1S6**	SFL204H1	UC204S6
25	5 1/8 130	2 11/16 68	1 3/32 27.5	3 57/64 99	5/8 16	13/32 10	5/8 16	1 13/32 35.8	1.343 34.1	0.563 14.3	1/2 M14	**UCSFL205H1S6**	SFL205H1	UC205S6
30	5 13/16 148	3 5/32 80	1 7/32 31	4 39/64 117	5/8 16	13/32 10	45/64 18	1 19/32 40.2	1.500 38.1	0.626 15.9	1/2 M14	**UCSFL206H1S6**	SFL206H1	UC206S6
35	6 11/32 161	3 11/32 85	1 11/32 34	5 1/8 130	5/8 16	7/16 11	3/4 19	1 3/4 44.4	1.689 42.9	0.689 17.5	1/2 M14	**UCSFL207H1S6**	SFL207H1	UC207S6
40	6 7/8 175	3 11/16 94	1 13/32 36	5 43/64 144	5/8 16	15/32 12	53/64 21	2 1/32 51.2	1.937 49.2	0.748 19	1/2 M14	**UCSFL208H1S6**	SFL208H1	UC208S6
45	7 13/32 188	3 15/16 100	1 1/2 38	5 53/64 148	3/4 19	1/2 13	55/64 22	2 1/16 52.2	1.937 49.2	0.748 19	5/8 M16	**UCSFL209H1S6**	SFL209H1	UC209S6
50	7 3/4 197	4 3/16 106	1 9/16 40	6 3/16 157	3/4 19	1/2 13	55/64 22	2 5/32 54.6	2.031 51.6	0.748 19	5/8 M16	**UCSFL210H1S6**	SFL210H1	UC210S6

Remarks 1. In Part No. of unit and units with covers, fitting codes follow bore diameter codes. (See **Table 10.5** in P.51.)
2. Part No. of applicable grease nipple is A-1/4-28UNFN12.
3. For the dimensions and forms of applicable bearings, see the dimensional tables of ball bearing for unit.

With Pressed Stainless Steel Covers

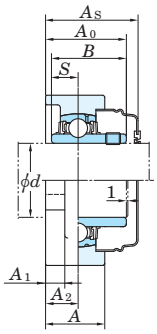

Variations of tolerance of distance from mounting surface to center of spherical bore (Δ_{A2s}) and variations of tolerance of distance between centers of bolt holes (Δ_{Js})

Unit : mm

Housing No.	Δ_{A2s}	Δ_{Js}
SFL204H1~SFL210H1	±0.5	0.3

Variations of tolerance of bolt hole diameter (Δ_{Ns})

Unit : mm

Housing No.	Δ_{Ns}
SFL204H1~SFL210H1	±0.2

Mass	Basic Load Ratings kN		Factor	With Pressed Stainless Steel Covers Unit No.		Dimension mm	inch	Mass
				Open End Type	Closed End Type	A_s		
kg	C_r	C_{0r}	f_0					kg
0.43	10.9	5.35	13.2	UCSFL204H1CS6	UCSFL204H1DS6	38	1 1/2	0.43
0.60	11.9	6.30	13.9	UCSFL205H1CS6	UCSFL205H1DS6	40	1 9/16	0.60
0.86	16.5	9.05	13.9	UCSFL206H1CS6	UCSFL206H1DS6	45	1 15/32	0.86
1.1	21.8	12.3	13.9	UCSFL207H1CS6	UCSFL207H1DS6	49	1 15/16	1.1
1.5	24.8	14.3	14.0	UCSFL208H1CS6	UCSFL208H1DS6	56	2 7/32	1.5
1.8	27.8	16.2	14.0	UCSFL209H1CS6	UCSFL209H1DS6	57	1 1/4	1.8
2.1	29.8	18.6	14.4	UCSFL210H1CS6	UCSFL210H1DS6	59	2 5/16	2.1

USFL-S6
Cylindrical bore (with set screws)
d 10 ~ 30 mm

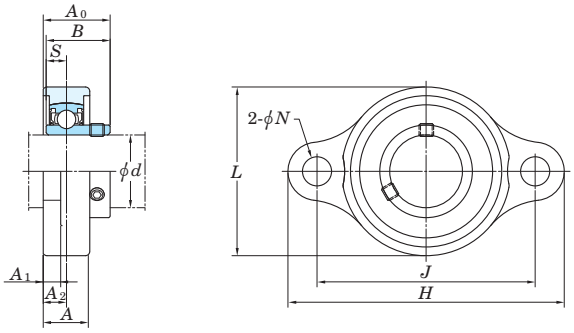

Shaft Dia. mm d	Dimensions inch / mm H	L	A	J	N	A_1	A_2	A_0	B	S	Bolt Size inch / mm	Standard Unit No.	Housing No.	Bearing No.
10	2 3/8 60	1 11/32 34	15/32 12	1 49/64 45	9/32 7	3/16 5	15/64 6	5/8 16	0.591 15	0.197 5	1/4 M6	**USFL000S6**	SFL000	SU000S6
12	2 15/32 63	1 13/32 36	15/32 12	1 57/64 48	9/32 7	3/16 5	15/64 6	5/8 16	0.591 15	0.197 5	1/4 M6	**USFL001S6**	SFL001	SU001S6
15	2 5/8 67	1 5/8 41	1/2 13	2 3/32 53	9/32 7	1/4 6	1/4 6.5	11/16 17.5	0.650 16.5	0.217 5.5	1/4 M6	**USFL002S6**	SFL002	SU002S6
17	2 25/32 71	1 23/32 44	9/16 14	2 13/64 56	9/32 7	1/4 6	9/32 7	23/32 18.5	0.689 17.5	0.236 6	1/4 M6	**USFL003S6**	SFL003	SU003S6
20	3 19/32 91	2 3/32 53	5/8 16	2 51/64 71	13/32 10	1/4 6	5/16 8	7/8 22	0.827 21	0.276 7	5/16 M8	**USFL004S6**	SFL004	SU004S6
25	3 3/4 95	2 9/32 58	5/8 16	2 61/64 75	13/32 10	1/4 6	5/16 8	29/32 23	0.866 22	0.276 7	5/16 M8	**USFL005S6**	SFL005	SU005S6
30	4 11/32 110	2 19/32 66	23/32 18	3 11/32 85	1/2 13	9/32 7	23/64 9	1 1/32 26	0.965 24.5	0.295 7.5	3/8 M10	**USFL006S6**	SFL006	SU006S6

Remarks 1. In Part No. of unit and units with covers, fitting codes follow bore diameter codes. (See **Table 10.5** in P.51.)
2. For the dimensions and forms of applicable bearings, see the dimensional tables of ball bearing for unit.

Open End Type

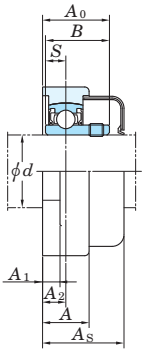

Closed End Type

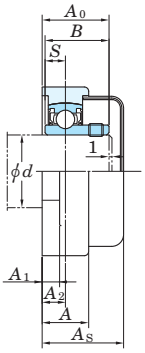

Variations of tolerance of distance from mounting surface to center of spherical bore (Δ_{A2s}) and variations of tolerance of distance between centers of bolt holes (Δ_{Js})

Unit : mm

Housing No.	Δ_{A2s}	Δ_{Js}
SFL000~SFL006	±0.5	±0.3

Variations of tolerance of bolt hole diameter (Δ_{Ns})

Unit : mm

Housing No.	Δ_{Ns}
SFL000~SFL006	±0.2

Mass	Basic Load Ratings kN		Factor	With Rubber Coated Cover Unit No.		Dimension mm	inch	Mass
kg	C_r	C_{0r}	f_0	Open End Type	Closed End Type	A_s		kg
0.076	3.9	1.55	12.3	USFL000CS6	USFL000DS6	20.5	13/16	0.076
0.080	4.3	1.9	13.2	USFL001CS6	USFL001DS6	20.5	13/16	0.080
0.1	4.7	2.25	13.9	USFL002CS6	USFL002DS6	22	7/8	0.1
0.13	5.1	2.6	14.4	USFL003CS6	USFL003DS6	23.5	15/16	0.13
0.21	7.9	4	13.9	USFL004CS6	USFL004DS6	27	1 1/16	0.21
0.23	8.5	4.65	14.5	USFL005CS6	USFL005DS6	28	1 3/32	0.23
0.33	11.2	6.6	14.7	USFL006CS6	USFL006DS6	31	1 7/32	0.33

UCFC
Cylindrical bore (with set screws)
d 12 ~ 50 mm

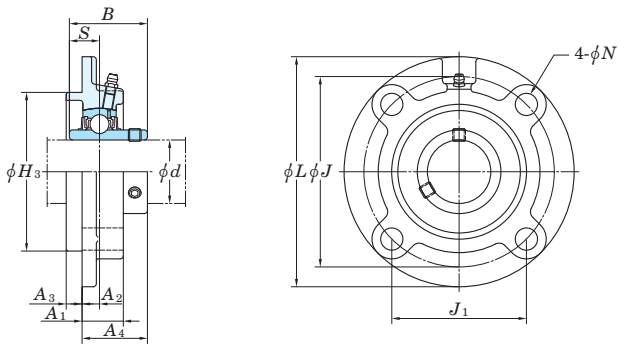

Shaft Dia. mm / inch	d	Dimensions inch / mm	L	H3	J	J1	N	A1	A2	A3	A4	B	S	Bolt Size inch / mm	Standard Unit No.	Housing No.	Bearing No.
12	1/2	3 15/16	2.4409	3 5/64	2 11/64	15/32	13/16	25/64	13/64	1 1/8	1.220	0.500	3/8	UCFC201	FC204	UC201
		100	62	78	55.1	12	20.5	10	5	28.3	31	12.7	M10	UCFC201-8		UC201-8
15	5/8													UCFC202		UC202
														UCFC202-10		UC202-10
17	3/4													UCFC203		UC203
														UCFC204-12		UC204-12
20														UCFC204		UC204
25	7/8	4 17/32	2.7559	3 35/64	2 1/2	15/32	13/16	25/64	15/64	1 3/16	1.343	0.563	3/8	UCFC205-14	FC205	UC205-14
	15/16	115	70	90	63.6	12	21	10	6	29.8	34.1	14.3	M10	UCFC205-15		UC205-15
														UCFC205		UC205
	1													UCFC205-16		UC205-16
	1	4 3/8	2.9921	3 5/8	2 9/16	3/8	15/16	25/64	15/64	1 9/32	1.500	0.626	5/16	UCFCX05	FCX05	UCX05
		111	76	92	65	9.5	24	10	6	32.2	38.1	15.9	M8	UCFCX05-16		UCX05-16
30	1 1/8	4 29/32	3.1496	3 15/16	2 25/32	15/32	29/32	25/64	5/16	1 9/32	1.500	0.626	3/8	UCFC206-18	FC206	UC206-18
		125	80	100	70.7	12	23	10	8	32.2	38.1	15.9	M10	UCFC206		UC206
	1 3/16													UCFC206-19		UC206-19
	1 1/4													UCFC206-20		UC206-20
	1 3/16	5	3.3465	4 9/64	2 59/64	15/32	7/8	5/16	3/8	1 5/16	1.689	0.689	3/8	UCFCX06	FCX06	UCX06
		127	85	105	74.2	12	22.5	8	9.5	33.4	42.9	17.5	M10	UCFCX06-19		UCX06-19
	1 1/4													UCFCX06-20		UCX06-20
35	1 1/4	5 5/16	3.5433	4 21/64	3 1/16	35/64	1 1/32	7/16	5/16	1 7/16	1.689	0.689	7/16	UCFC207-20	FC207	UC207-20
	1 5/16	135	90	110	77.8	14	26	11	8	36.4	42.9	17.5	M12	UCFC207-21		UC207-21
	1 3/8													UCFC207-22		UC207-22
														UCFC207		UC207
	1 7/16													UCFC207-23		UC207-23
	1 3/8	5 1/4	3.6220	4 3/8	3 3/32	15/32	1 1/32	23/64	7/16	1 17/32	1.937	0.748	3/8	UCFCX07-22	FCX07	UCX07-22
		133	92	111	78.5	12	26	9	11	39.2	49.2	19	M10	UCFCX07		UCX07
	1 7/16													UCFCX07-23		UCX07-23
40	1 1/2	5 23/32	3.9370	4 23/32	3 11/32	35/64	1 1/32	7/16	25/64	1 5/8	1.937	0.748	7/16	UCFC208-24	FC208	UC208-24
	1 9/16	145	100	120	84.8	14	26	11	10	41.2	49.2	19	M12	UCFC208-25		UC208-25
														UCFC208		UC208
	1 1/2	5 1/4	3.6220	4 3/8	3 3/32	15/32	1 1/32	23/64	7/16	1 17/32	1.937	0.748	3/8	UCFCX08-24	FCX08	UCX08-24
		133	92	111	78.5	12	26	9	11	39.2	49.2	19	M10	UCFCX08		UCX08
45	1 5/8	6 5/16	4.1339	5 13/64	3 43/64	5/8	1 1/32	25/64	15/32	1 19/32	1.937	0.748	1/2	UCFC209-26	FC209	UC209-26
	1 11/16	160	105	132	93.3	16	26	10	12	40.2	49.2	19	M14	UCFC209-27		UC209-27
	1 3/4													UCFC209-28		UC209-28
														UCFC209		UC209
	1 3/4	6 3/32	4.2520	5 1/8	3 5/8	35/64	31/32	5/16	15/32	1 19/32	2.031	0.748	7/16	UCFCX09-28	FCX09	UCX09-28
		155	108	130	91.9	14	25	8	12	40.6	51.6	19	M12	UCFCX09		UCX09
50	1 7/8	6 1/2	4.3307	5 7/16	3 27/32	5/8	1 3/32	25/64	15/32	1 11/16	2.031	0.748	1/2	UCFC210-30	FC210	UC210-30
	1 15/16	165	110	138	97.6	16	28	10	12	42.6	51.6	19	M14	UCFC210-31		UC210-31
														UCFC210		UC210
	2													UCFC210-32		UC210-32
	1 15/16	6 3/8	4.6457	5 23/64	3 25/32	35/64	31/32	9/32	5/8	1 19/32	2.189	0.874	7/16	UCFCX10-31	FCX10	UCX10-31
		162	118	136	96.2	14	25	7	16	40.4	55.6	22.2	M12	UCFCX10		UCX10
	2													UCFCX10-32		UCX10-32

Remarks 1. In Part No. of unit and units with covers, fitting codes follow bore diameter numbers. (See **Table 10.5** in P.51.)
2. Part No. of applicable grease nipples are shown below.
A-1/4-28UNF ..... 201~210, X05~X09
A-PT1/8 ..... 211~218, X10~X20

With Pressed Steel Cover

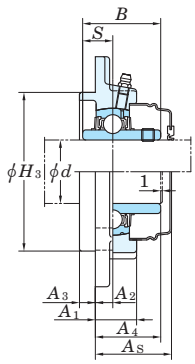

With Cast Iron Cover

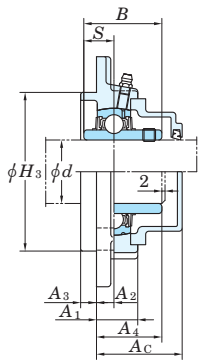

Variations of tolerance of spigot joint outside diameter (Δ_{H3s}), variations of tolerance of distance from mounting surface to center of spherical bore (Δ_{A2s}), tolerance of position of bolt hole (X), and tolerance of circumferential runout of spigot joint (Y)

Unit : mm

Housing No.		Δ_{H3s}	Δ_{A2s}	X	Y
FC204~FC206	FCX05	0 −0.046	±0.5	0.7	0.2
FC207~FC210	FCX06~FCX10	0 −0.054			
FC211~FC217	FCX11~FCX15	0 −0.063	±0.8	1	0.3
FC218	FCX16~FCX18	0 −0.072			
	FCX20				0.4

Variations of tolerance of bolt hole diameter (Δ_{Ns})

Unit : mm

Housing No.		Δ_{Ns}
FC204~FC218	FCX05~FCX20	±0.2

Mass	Basic Load Ratings kN		Factor	With Pressed Steel Cover				Mass	With Cast Iron Cover				Mass
				Unit No.		Dimension			Unit No.		Dimension		
				Open End Type	Closed End Type	mm	inch		Open End Type	Closed End Type	mm	inch	
kg	C_r	C_{0r}	f_0			A_s		kg			A_c		kg
0.78				UCFC201C	UCFC201D	32	1 1/4	0.78	–	–	–	–	–
0.78				–	–	–	–	–	–	–	–	–	–
0.76				UCFC202C	UCFC202D	32	1 1/4	0.76	–	–	–	–	–
0.76	12.8	6.65	13.2	–	–	–	–	–	–	–	–	–	–
0.75				UCFC203C	UCFC203D	32	1 1/4	0.75	–	–	–	–	–
0.75				–	–	–	–	–	–	–	–	–	–
0.73				UCFC204C	UCFC204D	32	1 1/4	0.73	UCFC204FC	UCFC204FD	38.5	1 17/32	0.84
0.95				–	–	–	–	–	–	–	–	–	–
0.95	14.0	7.85	13.9	–	–	–	–	–	–	–	–	–	–
0.95				UCFC205C	UCFC205D	34	1 11/32	0.95	UCFC205FC	UCFC205FD	42	1 21/32	1.1
0.95				–	–	–	–	–	–	–	–	–	–
1.2	19.5	11.3	13.9	UCFCX05C	UCFCX05D	36	1 13/32	1.2	–	–	–	–	–
1.2				–	–	–	–	–	–	–	–	–	–
1.3				–	–	–	–	–	–	–	–	–	–
1.3	19.5	11.3	13.9	UCFC206C	UCFC206D	36	1 13/32	1.3	UCFC206FC	UCFC206FD	45	1 25/32	1.6
1.3				–	–	–	–	–	–	–	–	–	–
1.3				–	–	–	–	–	–	–	–	–	–
1.5				UCFCX06C	UCFCX06D	38	1 1/2	1.5	–	–	–	–	–
1.5	25.7	15.4	13.9	–	–	–	–	–	–	–	–	–	–
1.5				–	–	–	–	–	–	–	–	–	–
1.7				–	–	–	–	–	–	–	–	–	–
1.7				–	–	–	–	–	–	–	–	–	–
1.7	25.7	15.4	13.9	–	–	–	–	–	–	–	–	–	–
1.7				UCFC207C	UCFC207D	41	1 5/8	1.7	UCFC207FC	UCFC207FD	50	1 31/32	2.1
1.7				–	–	–	–	–	–	–	–	–	–
1.9				–	–	–	–	–	–	–	–	–	–
1.9	29.1	17.8	14.0	UCFCX07C	UCFCX07D	43	1 11/16	1.9	–	–	–	–	–
1.9				–	–	–	–	–	–	–	–	–	–
2.0				–	–	–	–	–	–	–	–	–	–
2.0	29.1	17.8	14.0	–	–	–	–	–	–	–	–	–	–
2.0				UCFC208C	UCFC208D	45	1 25/32	2.0	UCFC208FC	UCFC208FD	54	2 1/8	2.4
2.0	34.1	21.3	14.0	–	–	–	–	–	–	–	–	–	–
2.0				UCFCX08C	UCFCX08D	43	1 11/16	2.0	–	–	–	–	–
2.6				–	–	–	–	–	–	–	–	–	–
2.6	34.1	21.3	14.0	–	–	–	–	–	–	–	–	–	–
2.6				–	–	–	–	–	–	–	–	–	–
2.6				UCFC209C	UCFC209D	44	1 23/32	2.6	UCFC209FC	UCFC209FD	54	2 1/8	3.0
2.6	35.1	23.3	14.4	–	–	–	–	–	–	–	–	–	–
2.6				UCFCX09C	UCFCX09D	45	1 25/32	2.6	–	–	–	–	–
2.9				–	–	–	–	–	–	–	–	–	–
2.9	35.1	23.3	14.4	–	–	–	–	–	–	–	–	–	–
2.9				UCFC210C	UCFC210D	47	1 27/32	2.9	UCFC210FC	UCFC210FD	58.5	2 5/16	3.4
2.9				–	–	–	–	–	–	–	–	–	–
3.2				–	–	–	–	–	–	–	–	–	–
3.2	43.4	29.4	14.4	UCFCX10C	UCFCX10D	45	1 25/32	3.2	–	–	–	–	–
3.2				–	–	–	–	–	–	–	–	–	–

3. As for the triple-lip seal type product (from 201 to 205 are the double-lip seal type products), supplementary code L3 (L2) follows the Part No. of unit or bearing. (Example of Part No. : UCFC206JL3, UC206L3)
4. For the dimensions and forms of applicable bearings, see the dimensional tables of ball bearing for unit.

UCFC
Cylindrical bore (with set screws)
d 55 ~ 100 mm

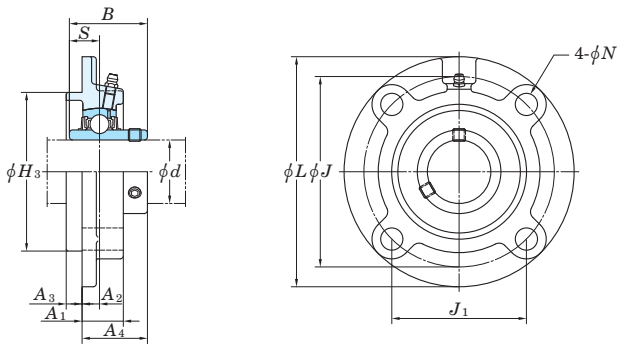

Shaft Dia. mm	Shaft Dia. inch	Dimensions inch / mm											Bolt Size inch / mm	Standard Unit No.	Standard Housing No.	Standard Bearing No.
d		L	H_3	J	J_1	N	A_1	A_2	A_3	A_4	B	S				
55	2	7 9/32	4.9213	5 29/32	4 11/64	3/4	1 7/32	33/64	15/32	1 13/16	2.189	0.874	5/8	UCFC211-32	FC211	UC211-32
	2 1/8	185	125	150	106.1	19	31	13	12	46.4	55.6	22.2	M16	UCFC211-34		UC211-34
														UCFC211		UC211
	2 3/16													UCFC211-35		UC211-35
	2 3/16	7 3/32	5	5 63/64	4 15/64	5/8	1 1/32	5/32	55/64	1 23/32	2.563	1.000	1/2	UCFCX11	FCX11	UCX11
		180	127	152	107.5	16	26	4	22	43.7	65.1	25.4	M14	UCFCX11-35		UCX11-35
	2 1/4													UCFCX11-36		UCX11-36
60	2 1/4	7 11/16	5.3150	6 19/64	4 29/64	3/4	1 13/32	43/64	15/32	2 7/32	2.563	1.000	5/8	UCFC212-36	FC212	UC212-36
		195	135	160	113.1	19	36	17	12	56.7	65.1	25.4	M16	UCFC212		UC212
	2 3/8													UCFC212-38		UC212-38
	2 7/16													UCFC212-39		UC212-39
	2 7/16	7 5/8	5.5118	6 1/2	4 19/32	5/8	1 5/16	7/16	25/32	2	2.563	1.000	1/2	UCFCX12	FCX12	UCX12
		194	140	165	116.7	16	33	11	20	50.7	65.1	25.4	M14	UCFCX12-39		UCX12-39
65	2 1/2	8 1/16	5.7087	6 11/16	4 47/64	3/4	1 13/32	5/8	35/64	2 3/16	2.563	1.000	5/8	UCFC213-40	FC213	UC213-40
		205	145	170	120.2	19	36	16	14	55.7	65.1	25.4	M16	UCFC213		UC213
	2 1/2	7 5/8	5.5118	6 1/2	4 19/32	5/8	1 5/16	7/16	25/32	2 3/16	2.937	1.189	1/2	UCFCX13-40	FCX13	UCX13-40
		194	140	165	116.7	16	33	11	20	55.4	74.6	30.2	M14	UCFCX13		UCX13
70	2 3/4	8 15/32	5.9055	6 31/32	4 59/64	3/4	1 9/16	43/64	35/64	2 13/32	2.937	1.189	5/8	UCFC214-44	FC214	UC214-44
		215	150	177	125.1	19	40	17	14	61.4	74.6	30.2	M16	UCFC214		UC214
	2 3/4	8 3/4	6.4567	7 31/64	5 9/32	3/4	1 13/32	35/64	25/32	2 5/16	3.063	1.331	5/8	UCFCX14-44	FCX14	UCX14-44
		222	164	190	134.3	19	36	14	20	58.5	77.8	33.3	M16	UCFCX14		UCX14
75	2 15/16	8 21/32	6.2992	7 1/4	5 1/8	3/4	1 9/16	45/64	5/8	2 15/32	3.063	1.331	5/8	UCFC215-47	FC215	UC215-47
		220	160	184	130.1	19	40	18	16	62.5	77.8	33.3	M16	UCFC215		UC215
	3													UCFC215-48		UC215-48
	2 15/16	8 3/4	6.4567	7 31/64	5 9/32	3/4	1 3/8	15/32	55/64	2 13/32	3.252	1.311	5/8	UCFCX15-47	FCX15	UCX15-47
		222	164	190	134.3	19	35	12	22	61.3	82.6	33.3	M16	UCFCX15		UCX15
	3													UCFCX15-48		UCX15-48
80	3 1/8	9 7/16	6.6929	7 7/8	5 9/16	29/32	1 31/32	45/64	5/8	2 21/32	3.252	1.311	3/4	UCFC216-50	FC216	UC216-50
		240	170	200	141.4	23	42	18	16	67.3	82.6	33.3	M20	UCFC216		UC216
	–	10 1/4	7.3228	8 5/8	6 3/32	29/32	1 13/32	25/64	63/64	2 7/16	3.374	1.343	3/4	UCFCX16	FCX16	UCX16
		260	186	219	154.8	23	36	10	25	61.6	85.7	34.1	M20			
85	3 1/4	9 27/32	7.0866	8 3/16	5 51/64	29/32	1 25/32	45/64	45/64	2 3/4	3.374	1.343	3/4	UCFC217-52	FC217	UC217-52
		250	180	208	147.1	23	45	18	18	69.6	85.7	34.1	M20	UCFC217		UC217
		10 1/4	7.3228	8 5/8	6 3/32	29/32	1 13/32	25/64	63/64	2 5/8	3.780	1.563	3/4	UCFCX17	FCX17	UCX17
	3 7/16	260	186	219	154.8	23	36	10	25	66.3	96	39.7	M20	UCFCX17-55		UCX17-55
90	3 1/2	10 7/16	7.4803	8 21/32	6 1/8	29/32	1 31/32	55/64	45/64	3 3/32	3.780	1.563	3/4	UCFC218-56	FC218	UC218-56
		265	190	220	155.5	23	50	22	18	78.3	96	39.7	M20	UCFC218		UC218
	–	10 1/4	7.3228	8 5/8	6 3/32	29/32	1 11/16	15/32	1 7/64	2 7/8	4.094	1.689	3/4	UCFCX18	FCX18	UCX18
		260	186	219	154.8	23	43	12	28	73.1	104	42.9	M20			
100	3 15/16	10 7/8	8.1102	9 3/8	6 5/8	29/32	2 19/32	55/64	1 7/64	3 9/16	4.626	1.937	3/4	UCFCX20	FCX20	UCX20
		276	206	238	168.3	23	66	22	28	90.3	117.5	49.2	M20	UCFCX20-63		UCX20-63
	4													UCFCX20-64		UCX20-64

Remarks 1. In Part No. of unit and units with covers, fitting codes follow bore diameter numbers. (See **Table 10.5** in P.51.)
2. Part No. of applicable grease nipples are shown below.
A-1/4-28UNF ..... 201~210, X05~X09
A-PT1/8 ..... 211~218, X10~X20

With Pressed Steel Cover

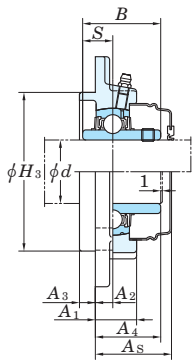

With Cast Iron Cover

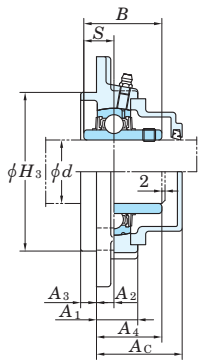

Variations of tolerance of spigot joint outside diameter (Δ_{H3s}), variations of tolerance of distance from mounting surface to center of spherical bore (Δ_{A2s}), tolerance of position of bolt hole (X), and tolerance of circumferential runout of spigot joint (Y)

Unit : mm

Housing No.		Δ_{H3s}	Δ_{A2s}	X	Y
FC204~FC206	FCX05	0 −0.046	±0.5	0.7	0.2
FC207~FC210	FCX06~FCX10	0 −0.054			
FC211~FC217	FCX11~FCX15	0 −0.063	±0.8	1	0.3
FC218	FCX16~FCX18	0 −0.072			
	FCX20				0.4

Variations of tolerance of bolt hole diameter (Δ_{Ns})

Unit : mm

Housing No.		Δ_{Ns}
FC204~FC218	FCX05~FCX20	±0.2

Mass	Basic Load Ratings kN		Factor	With Pressed Steel Cover				Mass	With Cast Iron Cover				Mass
				Unit No.		Dimension mm	inch		Unit No.		Dimension mm	inch	
kg	C_r	C_{0r}	f_0	Open End Type	Closed End Type	A_s		kg	Open End Type	Closed End Type	A_c		kg
4.2				–	–	–	–	–	–	–	–	–	–
4.2				–	–	–	–	–	–	–	–	–	–
4.2	43.4	29.4	14.4	UCFC211C	UCFC211D	51	2	4.2	UCFC211FC	UCFC211FD	62.5	2 15/32	4.8
4.2				–	–	–	–	–	–	–	–	–	–
4.3				UCFCX11C	UCFCX11D	46	1 13/16	4.3	–	–	–	–	–
4.3	52.4	36.2	14.4	–	–	–	–	–	–	–	–	–	–
4.3				–	–	–	–	–	–	–	–	–	–
5.0				–	–	–	–	–	–	–	–	–	–
5.0	52.4	36.2	14.4	UCFC212C	UCFC212D	61	2 13/32	5.0	UCFC212FC	UCFC212FD	74	2 29/32	5.8
5.0				–	–	–	–	–	–	–	–	–	–
5.0				–	–	–	–	–	–	–	–	–	–
5.3	57.2	40.1	14.4	UCFCX12C	UCFCX12D	55	2 5/32	5.3	–	–	–	–	–
5.3				–	–	–	–	–	–	–	–	–	–
5.6	57.2	40.1	14.4	–	–	–	–	–	–	–	–	–	–
5.6				UCFC213C	UCFC213D	60	2 3/8	5.6	UCFC213FC	UCFC213FD	73	2 7/8	6.4
5.7	62.2	44.1	14.5	–	–	–	–	–	–	–	–	–	–
5.7				UCFCX13C	UCFCX13D	60	2 3/8	5.7	–	–	–	–	–
6.8	62.2	44.1	14.5	–	–	–	–	–	–	–	–	–	–
6.8				UCFC214C	UCFC214D	66	2 19/32	6.8	UCFC214FC	UCFC214FD	79	3 1/8	7.7
7.3	67.4	48.3	14.5	–	–	–	–	–	–	–	–	–	–
7.3				UCFCX14C	UCFCX14D	63	2 15/32	7.3	–	–	–	–	–
7.2				–	–	–	–	–	–	–	–	–	–
7.2	67.4	48.3	14.5	UCFC215C	UCFC215D	67	2 5/8	7.2	UCFC215FC	UCFC215FD	80	3 5/32	8.2
7.2				–	–	–	–	–	–	–	–	–	–
8.0				–	–	–	–	–	–	–	–	–	–
8.0	72.7	53.0	14.6	UCFCX15C	UCFCX15D	66	2 19/32	8.0	–	–	–	–	–
8.0				–	–	–	–	–	–	–	–	–	–
8.7	72.7	53.0	14.6	–	–	–	–	–	–	–	–	–	–
8.7				UCFC216C	UCFC216D	72	2 27/32	8.7	UCFC216FC	UCFC216FD	87	3 7/16	9.9
11.3	84.0	61.9	14.5	UCFCX16C	UCFCX16D	66	2 19/32	11.3	–	–	–	–	–
10.3	84.0	61.9	14.5	–	–	–	–	–	–	–	–	–	–
10.3				UCFC217C	UCFC217D	74	2 29/32	10.3	UCFC217FC	UCFC217FD	89	3 1/2	11.7
12.9	96.1	71.5	14.5	UCFCX17C	UCFCX17D	71	2 25/32	12.9	–	–	–	–	–
12.9				–	–	–	–	–	–	–	–	–	–
13.3	96.1	71.5	14.5	–	–	–	–	–	–	–	–	–	–
13.3				UCFC218C	UCFC218D	83	3 9/32	13.3	UCFC218FC	UCFC218FD	98	3 27/32	14.8
13.5	109	81.9	14.4	–	–	–	–	–	UCFCX18C	UCFCX18C	92	3 5/8	15.4
18.2				–	–	–	–	–	UCFCX20C	UCFCX20D	116	4 9/16	20.7
18.2	133	105	14.4	–	–	–	–	–	–	–	–	–	–
18.2				–	–	–	–	–	–	–	–	–	–

3. As for the triple-lip seal type product (from 201 to 205 are the double-lip seal type products), supplementary code L3 (L2) follows the Part No. of unit or bearing. (Example of Part No. : UCFC206JL3, UC206L3)
4. For the dimensions and forms of applicable bearings, see the dimensional tables of ball bearing for unit.

UCFCX-E
Cylindrical bore (with set screws)
d 25 ~ 100 mm

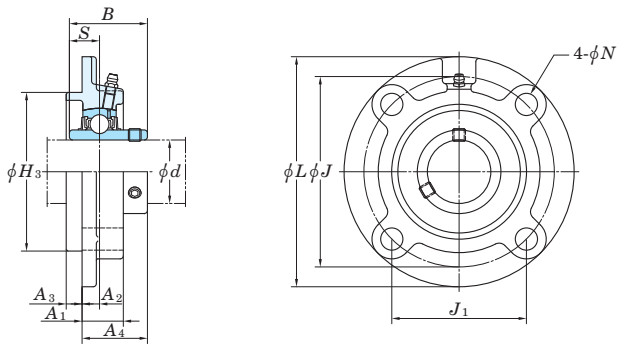

Shaft Dia. mm	Shaft Dia. inch	Dimensions inch / mm											Bolt Size inch / mm	Unit No.	Housing No.	Bearing No.
d		L	H_3	J	J_1	N	A_1	A_2	A_3	A_4	B	S				
25	1	4 3/8 111	3.000 76.2	3 5/8 92	2 9/16 65	3/8 9.5	15/16 24	25/64 10	15/64 6	1 9/32 32.2	1.500 38.1	0.626 15.9	5/16 M8	**UCFCX05E** **UCFCX05-16E**	FCX05E	UCX05 UCX05-16
30	1 3/16 1 1/4	5 127	3.375 85.725	4 9/64 105	2 59/64 74.2	15/32 12	7/8 22.5	5/16 8	3/8 9.5	1 5/16 33.4	1.689 42.9	0.689 17.5	3/8 M10	**UCFCX06E** **UCFCX06-19E** **UCFCX06-20E**	FCX06E	UCX06 UCX06-19 UCX06-20
35	1 3/8 1 7/16	5 1/4 133	3.625 92.075	4 3/8 111	3 3/32 78.5	15/32 12	1 1/32 26	23/64 9	7/16 11	1 17/32 39.2	1.937 49.2	0.748 19	3/8 M10	**UCFCX07-22E** **UCFCX07E** **UCFCX07-23E**	FCX07E	UCX07-22 UCX07 UCX07-23
40	1 1/2	5 1/4 133	3.625 92.075	4 3/8 111	3 3/32 78.5	15/32 12	1 1/32 26	23/64 9	7/16 11	1 17/32 39.2	1.937 49.2	0.748 19	3/8 M10	**UCFCX08-24E** **UCFCX08E**	FCX08E	UCX08-24 UCX08
45	1 3/4	6 3/32 155	4.250 107.95	5 1/8 130	3 5/8 91.9	35/64 14	31/32 25	5/16 8	15/32 12	1 19/32 40.6	2.031 51.6	0.748 19	7/16 M12	**UCFCX09-28E** **UCFCX09E**	FCX09E	UCX09-28 UCX09
50	1 15/16 2	6 3/8 162	4.5 114.3	5 23/64 136	3 25/32 96.2	35/64 14	31/32 25	9/32 7	5/8 16	1 19/32 40.4	2.189 55.6	0.874 22.2	7/16 M12	**UCFCX10-31E** **UCFCX10E** **UCFCX10-32E**	FCX10E	UCX10-31 UCX10 UCX10-32
60	2 7/16	7 5/8 194	5.500 139.7	6 1/2 165	4 19/32 116.7	5/8 16	1 5/16 33	7/16 11	25/32 20	2 50.7	2.563 65.1	1.000 25.4	1/2 M14	**UCFCX12E** **UCFCX12-39E**	FCX12E	UCX12 UCX12-39
65	2 1/2	7 5/8 194	5.500 139.7	6 1/2 165	4 19/32 116.7	5/8 16	1 5/16 33	7/16 11	25/32 20	2 3/16 55.4	2.937 74.6	1.189 30.2	1/2 M14	**UCFCX13-40E** **UCFCX13E**	FCX13E	UCX13-40 UCX13
70	2 3/4	8 3/4 222	6.375 161.925	7 31/64 190	5 9/32 134.3	3/4 19	1 13/32 36	35/64 14	25/32 20	2 5/16 58.5	3.063 77.8	1.331 33.3	5/8 M16	**UCFCX14-44E** **UCFCX14E**	FCX14E	UCX14-44 UCX14
75	2 15/16 3	8 3/4 222	6.375 161.925	7 31/64 190	5 9/32 134.3	3/4 19	1 3/8 35	15/32 12	55/64 22	2 13/32 61.3	3.252 82.6	1.311 33.3	5/8 M16	**UCFCX15-47E** **UCFCX15E** **UCFCX15-48E**	FCX15E	UCX15-47 UCX15 UCX15-48
80	–	10 1/4 260	7.375 187.325	8 5/8 219	6 3/32 154.8	29/32 23	1 13/32 36	25/64 10	63/64 25	2 7/16 61.6	3.374 85.7	1.343 34.1	3/4 M20	**UCFCX16E**	FCX16E	UCX16
85	3 7/16	10 1/4 260	7.375 187.325	8 5/8 219	6 3/32 154.8	29/32 23	1 13/32 36	25/64 10	63/64 25	2 5/8 66.3	3.780 96	1.563 39.7	3/4 M20	**UCFCX17E** **UCFCX17-55E**	FCX17E	UCX17 UCX17-55
90	–	10 1/4 260	7.375 187.325	8 5/8 219	6 3/32 154.8	29/32 23	1 11/16 43	15/32 12	1 7/64 28	2 7/8 73.1	4.094 104	1.689 42.9	3/4 M20	**UCFCX18E**	FCX18E	UCX18
100	3 15/16 4	10 7/8 276	8.125 206.375	9 3/8 238	6 5/8 168.3	29/32 23	2 19/32 66	55/64 22	1 7/64 28	3 9/16 90.3	4.626 117.5	1.937 49.2	3/4 M20	**UCFCX20E** **UCFCX20-63E** **UCFCX20-64E**	FCX20E	UCX20 UCX20-63 UCX20-64

Remarks 1. In Part No. of unit, fitting codes follow bore diameter numbers. (See **Table 10.5** in P.51.)
2. Part No. of applicable grease nipples are shown below.
A-1/4-28UNF ..... X05~X09
A-PT1/8 ..... X10~X20

Variations of tolerance of spigot joint outside diameter (Δ_{H3s}), variations of tolerance of distance from mounting surface to center of spherical bore (Δ_{A2s}), tolerance of position of bolt hole (X), and tolerance of circumferential runout of spigot joint (Y)

Unit : mm

Housing No.	Δ_{H3s}	Δ_{A2s}	X	Y
FCX05E	0 −0.046	±0.5	0.7	0.2
FCX06E~FCX10E	0 −0.054			
FCX12E~FCX15E	0 −0.063	±0.8	1	0.3
FCX16E~FCX18E	0 −0.072			
FCX20E				0.4

Variations of tolerance of bolt hole diameter (Δ_{Ns})

Unit : mm

Housing No.	Δ_{Ns}
FCX05E~FCX20E	±0.2

	Basic Load Ratings kN		Factor	Mass
	C_r	C_{0r}	f_0	kg
	19.5	11.3	13.9	1.2
	25.7	15.4	13.9	1.5
	29.1	17.8	14.0	1.9
	34.1	21.3	14.0	2.0
	35.1	23.3	14.4	2.6
	43.4	29.4	14.4	3.2
	57.2	40.1	14.4	5.3
	62.2	44.1	14.5	5.7
	67.4	48.3	14.5	7.3
	72.7	53.0	14.6	8.0
	84.0	61.9	14.5	11.3
	96.1	71.5	14.5	12.9
	109	81.9	14.4	13.5
	133	105	14.4	18.2

3. As for the triple-lip seal type product (from 201 to 205 are the double-lip seal type products), supplementary code L3 (L2) follows the Part No. of unit or bearing. (Example of Part No. : UCFCX06EL3, UCX06L3)
4. For the dimensions and forms of applicable bearings, see the dimensional tables of ball bearing for unit.

UKFC
Tapered bore (with adapter)
d_1 20 ~ (65) mm

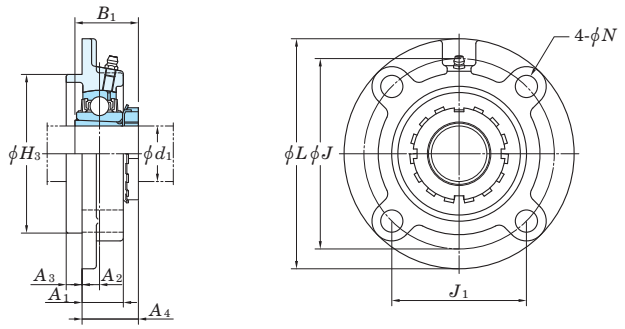

Shaft Dia. mm	Shaft Dia. inch	Dimensions inch / mm										Bolt Size inch / mm	Standard Unit No.	Housing No.	Bearing No.
d_1		L	H_3	J	J_1	N	A_1	A_2	A_3	A_4 1)	B_1 1)				
20	3/4	4 17/32	2.7559	3 35/64	2 1/2	15/32	13/16	25/64	15/64	1 1/8(1 3/16)	1 5/32(1 3/8)	3/8	UKFC205	FC205	UK205
		115	70	90	63.6	12	21	10	6	28.5(30)	29(35)	M10			
	3/4	4 3/8	2.9921	3 5/8	2 9/16	3/8	15/16	25/64	15/64	1 5/32	1 3/8	5/16	UKFCX05	FCX05	UKX05
		111	76	92	65	9.5	24	10	6	29.5	35	M8			
25		4 29/32	3.1496	3 15/16	2 25/32	15/32	29/32	25/64	5/16	1 5/32(1 1/4)	1 7/32(1 1/2)	3/8	UKFC206	FC206	UK206
	1	125	80	100	70.7	12	23	10	8	29.5(31.5)	31(38)	M10			
		5	3.3465	4 9/64	2 59/64	15/32	7/8	5/16	3/8	1 5/32	1 1/2	3/8	UKFCX06	FCX06	UKX06
	1	127	85	105	74.2	12	22.5	8	9.5	29	38	M10			
30	1 1/8	5 5/16	3.5433	4 21/64	3 1/16	35/64	1 1/32	7/16	5/16	1 5/16(1 3/8)	1 3/8(1 11/16)	7/16	UKFC207	FC207	UK207
		135	90	110	77.8	14	26	11	8	33(35)	35(43)	M12			
	1 1/8	5 1/4	3.6220	4 3/8	3 3/32	15/32	1 1/32	23/64	7/16	1 1/4	1 11/16	3/8	UKFCX07	FCX07	UKX07
		133	92	111	78.5	12	26	9	11	31.5	43	M10			
35	1 1/4 1 3/8	5 23/32	3.9370	4 23/32	3 11/32	35/64	1 1/32	7/16	25/64	1 11/32(1 1/2)	1 13/32(1 13/16)	7/16	UKFC208	FC208	UK208
		145	100	120	84.8	14	26	11	10	34.5(38)	36(46)	M12			
	1 1/4 1 3/8	5 1/4	3.6220	4 3/8	3 3/32	15/32	1 1/32	23/64	7/16	1 5/16	1 13/16	3/8	UKFCX08	FCX08	UKX08
		133	92	111	78.5	12	26	9	11	33.5	46	M10			
40	1 1/2 1 5/8	6 5/16	4.1339	5 13/64	3 43/64	5/8	1 1/32	25/64	15/32	1 13/32(1 17/32)	1 17/32(1 31/32)	1/2	UKFC209	FC209	UK209
		160	105	132	93.3	16	26	10	12	35.5(39)	39(50)	M14			
	1 1/2 1 5/8	6 3/32	4.2520	5 1/8	3 5/8	35/64	31/32	5/16	15/32	1 5/16	1 31/32	7/16	UKFCX09	FCX09	UKX09
		155	108	130	91.9	14	25	8	12	33.5	50	M12			
45	1 3/4	6 1/2	4.3307	5 7/16	3 27/32	5/8	1 3/32	25/64	15/32	1 7/16(1 9/16)	1 21/32(2 5/32)	1/2	UKFC210	FC210	UK210
		165	110	138	97.6	16	28	10	12	36.5(40)	42(55)	M14			
	1 3/4	6 3/8	4.6457	5 23/64	3 25/32	35/64	31/32	9/32	5/8	1 11/32	2 5/32	7/16	UKFCX10	FCX10	UKX10
		162	118	136	96.2	14	25	7	16	34.5	55	M12			
50	1 7/8 2	7 9/32	4.9213	5 29/32	4 11/64	3/4	1 7/32	33/64	15/32	1 19/32(1 25/32)	1 25/32(2 5/16)	5/8	UKFC211	FC211	UK211
		185	125	150	106.1	19	31	13	12	40.5(45)	45(59)	M16			
	1 7/8 2	7 3/32	5	5 63/64	4 15/64	5/8	1 1/32	5/32	55/64	1 9/32	2 5/16	1/2	UKFCX11	FCX11	UKX11
		180	127	152	107.5	16	26	4	22	32.5	59	M14			
55	2 1/8	7 11/16	5.3150	6 19/64	4 29/64	3/4	1 13/32	43/64	15/32	1 27/32(2 3/32)	1 27/32(2 7/16)	5/8	UKFC212	FC212	UK212
		195	135	160	113.1	19	36	17	12	46.5(53.5)	47(62)	M16			
	2 1/8	7 5/8	5.5118	6 1/2	4 19/32	5/8	1 5/16	7/16	25/32	1 21/32	2 7/16	1/2	UKFCX12	FCX12	UKX12
		194	140	165	116.7	16	33	11	20	42	62	M14			
60	2 1/4 2 3/8	8 1/16	5.7087	6 11/16	4 47/64	3/4	1 13/32	5/8	35/64	1 7/8(2 3/32)	1 31/32(2 9/16)	5/8	UKFC213	FC213	UK213
		205	145	170	120.2	19	36	16	14	48(53.5)	50(65)	M16			
	2 1/4 2 3/8	7 5/8	5.5118	6 1/2	4 19/32	5/8	1 5/16	7/16	25/32	1 25/32	2 9/16	1/2	UKFCX13	FCX13	UKX13
		194	140	165	116.7	16	33	11	20	45	65	M14			
65	2 1/2	8 21/32	6.2992	7 1/4	5 1/8	3/4	1 9/16	45/64	5/8	2 3/32(2 5/16)	2 5/32(2 7/8)	5/8	UKFC215	FC215	UK215
		220	160	184	130.1	19	40	18	16	53(58.5)	55(73)	M16			

Note 1) Codes shown in parentheses indicate the dimensions and Part No. of applicable adapter (H2300X series) for UK200L3 series (triple-lip seal type).

Remarks 1. In Part No. of unit and units with covers, fitting codes follow bore diameter numbers. (See **Table 10.5** in P.51.)

2. Part No. of applicable grease nipples are shown below.
A-1/4-28UNF.....205~210, X05~X09
A-PT1/8.....211~218, X10~X20

With Pressed Steel Cover

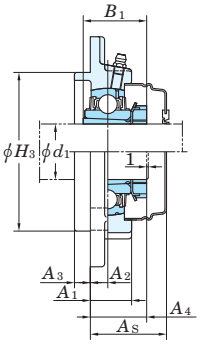

With Cast Iron Cover

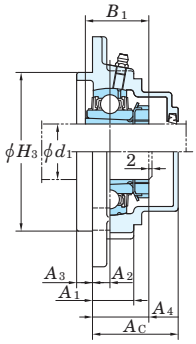

Variations of tolerance of spigot joint outside diameter (Δ_{H3s}), variations of tolerance of distance from mounting surface to center of spherical bore (Δ_{A2s}), tolerance of position of bolt hole (X), and tolerance of circumferential runout of spigot joint (Y)

Unit : mm

Housing No.		Δ_{H3s}	Δ_{A2s}	X	Y
FC205~FC206	FCX05	0 −0.046	±0.5	0.7	0.2
FC207~FC210	FCX06~FCX10	0 −0.054			
FC211~FC217	FCX11~FCX15	0 −0.063	±0.8	1	0.3
FC218	FCX16~FCX18	0 −0.072			
	FCX20				0.4

Variations of tolerance of bolt hole diameter (Δ_{Ns})

Unit : mm

Housing No.		Δ_{Ns}
FC204~FC218	FCX05~FCX20	±0.2

Adapter[1] assembly No.	Mass kg	Basic Load Ratings kN C_r	C_{0r}	Factor f_0	With Pressed Steel Cover Unit No. Open End Type	Closed End Type	Dimension mm inch A_s		Mass kg	With Cast Iron Cover Unit No. Open End Type	Closed End Type	Dimension mm inch A_c		Mass kg
HE305X(HE2305X)	0.99	14.0	7.85	13.9	–	–	–	–	–	–	–	–	–	–
H305X(H2305X)	0.99				UKFC205C	UKFC205D	34	1 11/32	0.99	UKFC205FC	UKFC205FD	42	1 21/32	1.2
HE2305X	1.2	19.5	11.3	13.9	–	–	–	–	–	–	–	–	–	–
H2305X	1.2				UKFCX05C	UKFCX05D	36	1 13/32	1.2	–	–	–	–	–
H306X(H2306X)	1.3	19.5	11.3	13.9	UKFC206C	UKFC206D	36	1 13/32	1.3	UKFC206FC	UKFC206FD	45	1 25/32	1.6
HE306X(HE2306X)	1.3				–	–	–	–	–	–	–	–	–	–
H2306X	1.5	25.7	15.4	13.9	UKFCX06C	UKFCX06D	38	1 1/2	1.5	–	–	–		–
HE2306X	1.5				–	–	–	–	–	–	–	–	–	–
HS307X(HS2307X)	1.7	25.7	15.4	13.9	–	–	–	–	–	–	–	–	–	–
H307X(H2307X)	1.7				UKFC207C	UKFC207D	41	1 5/8	1.7	UKFC207FC	UKFC207FD	50	1 31/32	2.1
HS2307X	1.9	29.1	17.8	14.0	–	–	–	–	–	–	–	–	–	–
H2307X	1.9				UKFCX07C	UKFCX07D	43	1 11/16	1.9	–	–	–	–	–
HE308X(HE2308X)	2.0	29.1	17.8	14.0	–	–	–	–	–	–	–	–	–	–
HS308X(HS2308X)	2.0				–	–	–	–	–	–	–	–	–	–
H308X(H2308X)	2.0				UKFC208C	UKFC208D	45	1 25/32	2.0	UKFC208FC	UKFC208FD	54	2 1/8	2.4
HE2308X	1.9	34.1	21.3	14.0	–	–	–	–	–	–	–	–	–	–
HS2308X	1.9				–	–	–	–	–	–	–	–	–	–
H2308X	1.9				UKFCX08C	UKFCX08D	43	1 11/16	1.9	–	–	–	–	–
HE309X(HE2309X)	2.7	34.1	21.3	14.0	–	–	–	–	–	–	–	–	–	–
H309X(H2309X)	2.7				UKFC209C	UKFC209D	44	1 23/32	2.7	UKFC209FC	UKFC209FD	54	2 1/8	3.2
HS309X(HS2309X)	2.7				–	–	–	–	–	–	–	–	–	–
HE2309X	2.6	35.1	23.3	14.4	–	–	–	–	–	–	–	–	–	–
H2309X	2.6				UKFCX09C	UKFCX09D	45	1 25/32	2.6	–	–	–	–	–
HS2309X	2.6				–	–	–	–	–	–	–	–	–	–
HE310X(HE2310X)	3.0	35.1	23.3	14.4	–	–	–	–	–	–	–	–	–	–
H310X(H2310X)	3.0				UKFC210C	UKFC210D	47	1 27/32	3.0	UKFC210FC	UKFC210FD	58.5	2 5/16	3.5
HE2310X	3.1	43.4	29.4	14.4	–	–	–	–	–	–	–	–	–	–
H2310X	3.1				UKFCX10C	UKFCX10D	45	1 25/32	3.1	–	–	–	–	–
HS311X(HS2311X)	4.3	43.4	29.4	14.4	–	–	–	–	–	–	–	–	–	–
H311X(H2311X)	4.3				UKFC211C	UKFC211D	51	2	4.3	UKFC211FC	UKFC211FD	62.5	2 15/32	4.9
HE311X(HE2311X)	4.3				–	–	–	–	–	–	–	–	–	–
HS2311X	4.0	52.4	36.2	14.4	–	–	–	–	–	–	–	–	–	–
H2311X	4.0				UKFCX11C	UKFCX11D	48	1 7/8	4.0	–	–	–	–	–
HE2311X	4.0				–	–	–	–	–	–	–	–	–	–
HS312X(HS2312X)	4.9	52.4	36.2	14.4	–	–	–	–	–	–	–	–	–	–
H312X(H2313X)	4.9				UKFC212C	UKFC212D	61	2 13/32	4.9	UKFC212FC	UKFC212FD	74	2 29/32	5.7
HS2312X	5.1	57.2	40.1	14.4	–	–	–	–	–	–	–	–	–	–
H2312X	5.1				UKFCX12C	UKFCX12D	55	2 5/32	5.1	–	–	–	–	–
HE313X(HE2313X)	5.5	57.2	40.1	14.4	–	–	–	–	–	–	–	–	–	–
H313X(H2313X)	5.5				UKFC213C	UKFC213D	60	2 3/8	5.5	UKFC213FC	UKFC213FD	73	2 7/8	6.4
HS313X(HS2313X)	5.5				–	–	–	–	–	–	–	–	–	–
HE2313X	5.3	62.2	44.1	14.5	–	–	–	–	–	–	–	–	–	–
H2313X	5.3				UKFCX13C	UKFCX13D	60	2 3/8	5.3	–	–	–	–	–
HS2313X	5.3				–	–	–	–	–	–	–	–	–	–
HE315X(HE2315X)	7.4	67.4	48.3	14.5	–	–	–	–	–	–	–	–	–	–
H315X(H2315X)	7.4				UKFC215C	UKFC215D	67	2 5/8	7.4	UKFC215FC	UKFC215FD	80	3 5/32	8.4

3. In Part No. of unit with adapters and bearing with adapters, Part No. of applicable adapter follow the Part No. shown in the dimensional tables. (Example of Part No. : UKFC206J + H306X, UK206 + H306X)
4. As for the triple-lip seal type product (205 is the double-lip seal type product), supplementary code L3 (or L2) follows the Part No. of unit or bearing. (Example of Part No. : UKFC206JL3 + H2306X, UK206L3 + H2306X)
5. For the dimensions and forms of applicable bearings and adapters, see the dimensional tables of ball bearing for unit and adapter assemblies.

UKFC
Tapered bore (with adapter)
d_1 (65) ~ 90 mm

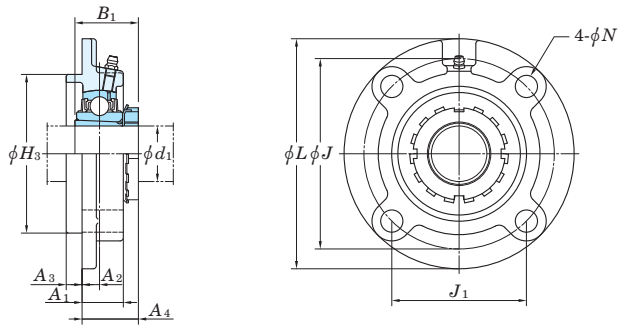

Shaft Dia. mm inch d_1		Dimensions inch / mm L	H_3	J	J_1	N	A_1	A_2	A_3	A_4 1)	B_1 1)	Bolt Size inch / mm	Standard Unit No.	Housing No.	Bearing No.
65	2 1/2	8 3/4 222	6.4567 164	7 31/64 190	5 9/32 134.3	3/4 19	1 3/8 35	15/32 12	55/64 22	1 7/8 48	2 7/8 73	5/8 M16	**UKFCX15**	FCX15	UKX15
70	2 3/4	9 7/16 240	6.6929 170	7 7/8 200	5 9/16 141.4	29/32 23	1 31/32 42	45/64 18	5/8 16	2 7/32(2 15/32) 56(62.5)	2 5/16(3 1/16) 59(78)	3/4 M20	**UKFC216**	FC216	UK216
	2 3/4	10 1/4 260	7.3228 186	8 5/8 219	6 3/32 154.8	29/32 23	1 13/32 36	25/64 10	63/64 25	1 15/16 49	3 1/16 78	3/4 M20	**UKFCX16**	FCX16	UKX16
75	3	9 27/32 250	7.0866 180	8 3/16 208	5 51/64 147.1	29/32 23	1 25/32 45	45/64 18	45/64 18	2 9/32(3 17/32) 58(64.5)	2 15/32(3 7/32) 63(82)	3/4 M20	**UKFC217**	FC217	UK217
	3	10 1/4 260	7.3228 186	8 5/8 219	6 3/32 154.8	29/32 23	1 13/32 36	25/64 10	63/64 25	2 1/16 52	3 7/32 82	3/4 M20	**UKFCX17**	FCX17	UKX17
80	–	10 7/16 265	7.4803 190	8 21/32 220	6 1/8 155.5	29/32 23	1 31/32 50	55/64 22	45/64 18	2 17/32(2 13/16) 64(71.5)	2 9/16(3 3/8) 65(86)	3/4 M20	**UKFC218**	FC218	UK218
	–	10 1/4 260	7.3228 186	8 5/8 219	6 3/32 154.8	29/32 23	1 11/16 43	15/32 12	1 7/64 28	2 5/32 55	3 3/8 86	3/4 M20	**UKFCX18**	FCX18	UKX18
90	3 1/2	10 7/8 276	8.1102 206	9 3/8 238	6 5/8 168.3	29/32 23	2 19/32 66	55/64 22	1 7/64 28	2 23/32 69	3 13/16 97	3/4 M20	**UKFCX20**	FCX20	UKX20

Note 1) Codes shown in parentheses indicate the dimensions and Part No. of applicable adapter (H2300X series) for UK200L3 series (triple-lip seal type).

Remarks 1. In Part No. of unit and units with covers, fitting codes follow bore diameter numbers. (See **Table 10.5** in P.51.)

2. Part No. of applicable grease nipples are shown below.
A-1/4-28UNF.....205~210, X05~X09
A-PT1/8.....211~218, X10~X20

With Pressed Steel Cover

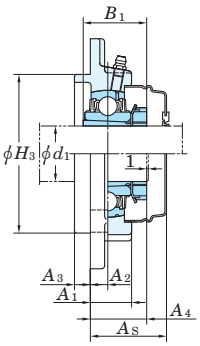

With Cast Iron Cover

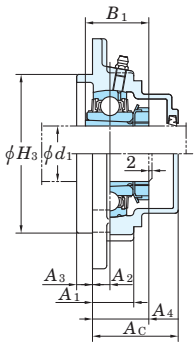

Variations of tolerance of spigot joint outside diameter (Δ_{H3s}), variations of tolerance of distance from mounting surface to center of spherical bore (Δ_{A2s}), tolerance of position of bolt hole (X), and tolerance of circumferential runout of spigot joint (Y)

Unit : mm

Housing No.		Δ_{H3s}	Δ_{A2s}	X	Y
FC205~FC206	FCX05	0 −0.046	±0.5	0.7	0.2
FC207~FC210	FCX06~FCX10	0 −0.054			
FC211~FC217	FCX11~FCX15	0 −0.063	±0.8	1	0.3
FC218	FCX16~FCX18	0 −0.072			
	FCX20				0.4

Variations of tolerance of bolt hole diameter (Δ_{Ns})

Unit : mm

Housing No.		Δ_{Ns}
FC204~FC218	FCX05~FCX20	±0.2

Adapter[1] assembly No.	Mass kg	Basic Load Ratings kN C_r	C_{0r}	Factor f_0	With Pressed Steel Cover Unit No. Open End Type	Closed End Type	Dimension mm inch A_s		Mass kg	With Cast Iron Cover Unit No. Open End Type	Closed End Type	Dimension mm inch A_c		Mass kg
HE2315X	7.7	72.7	53.0	14.6	–	–	–	–	–	–	–	–	–	–
H2315X	7.7				UKFCX15C	UKFCX15D	66	2 19/32	7.7	–	–	–	–	–
HE316X(HE2316X)	9.0	72.7	53.0	14.6	–	–	–	–	–	–	–	–	–	–
H316X(H2316X)	9.0				UKFC216C	UKFC216D	72	2 27/32	9.0	UKFC216FC	UKFC216FD	87	3 7/16	10.3
HE2316X	11.4	84.0	61.9	14.5	–	–	–	–	–	–	–	–	–	–
H2316X	11.4				UKFCX16C	UKFCX16D	66	2 19/32	11.4	–	–	–	–	–
H317X(H2317X)	10.4	84.0	61.9	14.5	UKFC217C	UKFC217D	74	2 29/32	10.4	UKFC217FC	UKFC217FD	89	3 1/2	11.8
HE317X(HE2317X)	10.4				–	–	–	–	–	–	–	–	–	–
H2317X	12.6	96.1	71.5	14.5	UKFCX17C	UKFCX17D	71	2 25/32	12.6	–	–	–		–
HE2317X	12.6				–	–	–	–	–	–	–	–	–	–
H318X(H2318X)	13.3	96.1	71.5	14.5	UKFC218C	UKFC218D	83	3 9/32	13.3	UKFC218FC	UKFC218FD	98	3 27/32	14.9
H2318X	13.0	109	81.9	14.4	–	–	–	–	–	UKFCX18C	UKFCX18D	92	3 5/8	15.1
HE2320X	17.1	133	105	14.4	–	–	–	–	–	–	–	–	–	–
H2320X	17.1				–	–	–	–	–	UKFCX20C	UKFCX20D	116	4 9/16	19.9

3. In Part No. of unit with adapters and bearing with adapters, Part No. of applicable adapter follow the Part No. shown in the dimensional tables. (Example of Part No. : UKFC206J + H306X, UK206 + H306X)
4. As for the triple-lip seal type product (205 is the double-lip seal type product), supplementary code L3 (or L2) follows the Part No. of unit or bearing. (Example of Part No. : UKFC206JL3 + H2306X, UK206L3 + H2306X)
5. For the dimensions and forms of applicable bearings and adapters, see the dimensional tables of ball bearing for unit and adapter assemblies.

SBPF
Cylindrical bore
(with set screws)
SAPF
Cylindrical bore
(with eccentric locking collar)
d 12 ~ 35 mm

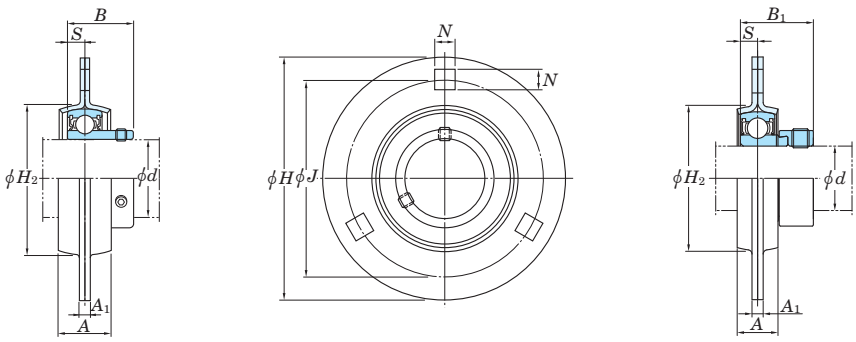

SBPF SAPF

Shaft Dia mm	Shaft Dia inch	Dimensions inch / mm H	A	A_1	J	N	H_2	S	SBPF B	SAPF B_1	Bolt Size inch / mm	Unit No.	Bearing No.
12												**SBPF201**	SB201
	1/2	3 3/16	9/16	5/32	2 1/2	9/32	1 15/16	0.236	0.866	1.122	1/4	**SBPF201-8**	SB201-8
15		81	14	4	63.5	7.1	49	6	22	28.5	M6	**SBPF202**	SB202
	5/8											**SBPF202-10**	SB202-10
17												**SBPF203**	SB203
20	3/4	3 17/32	5/8	5/32	2 13/16	23/64	25/32	0.276	0.984	1.161	5/16	**SBPF204-12**	SB204-12
		90	16	4	71.5	9	55	7	25	29.5	M8	**SBPF204**	SB204
	7/8											**SBPF205-14**	SB205-14
25	15/16	3 3/4	23/32	5/32	2 63/64	23/64	2 3/8	0.295	1.063	1.201	5/16	**SBPF205-15**	SB205-15
		95	18	4	76	9	60	7.5	27	30.5	M8	**SBPF205**	SB205
	1											**SBPF205-16**	SB205-16
	1 1/8											**SBPF206-18**	SB206-18
30		4 7/16	3/4	13/64	3 9/16	7/16	2 25/32	0.315	1.181	1.335	3/8	**SBPF206**	SB206
	13/16	113	19	5.2	90.5	11	71	8	30	33.9	M10	**SBPF206-19**	SB206-19
	1 1/4											**SBPF206-20**	SB206-20
	1 1/4											**SBPF207-20**	SB207-20
	15/16	4 13/16	7/8	13/64	3 15/16	7/16	3 3/16	0.335	1.260	1.437	3/8		
35	1 3/8	122	22	5.2	100	11	81	8.5	32	36.5	M10	**SBPF207-22**	SB207-22
												SBPF207	SB207
	1 7/16											**SBPF207-23**	SB207-23

Note 1) H_2 is the minimum size of the mounting hole.

Variations of tolerance of distance between centers of bolt holes (Δ_{Js})

Unit : mm

Housing No.	Δ_{Js}
PF203~PF207	±0.4

Variations of tolerance of bolt hole diameter (Δ_{Ns})

Unit : mm

Housing No.	Δ_{Ns}
PF203~PF207	±0.25

Unit No.	Bearing No.	Housing No.	Basic Load Ratings kN		Factor	Mass kg	
			C_r	C_{0r}	f_0	SBPF	SAPF
SAPF201	SA201	PF203	9.55	4.80	13.2	0.27	0.3
SAPF201-8	SA201-8						
SAPF202	SA202						
SAPF202-10	SA202-10						
SAPF203	SA203						
SAPF204-12	SA204-12	PF204	12.8	6.65	13.2	0.33	0.33
SAPF204	SA204						
SAPF205-14	SA205-14	PF205	14.0	7.85	13.9	0.38	0.42
SAPF205-15	SA205-15						
SAPF205	SA205						
SAPF205-16	SA205-16						
SAPF206-18	SA206-18	PF206	19.5	11.3	13.9	0.62	0.65
SAPF206	SA206						
SAPF206-19	SA206-19						
SAPF206-20	SA206-20						
SAPF207-20	SA207-20	PF207	25.7	15.4	13.9	0.82	0.9
SAPF207-21	SA207-21						
SAPF207-22	SA207-22						
SAPF207	SA207						
SAPF207-23	SA207-23						

Remark For the dimensions and forms of applicable bearings, see the dimensional tables of ball bearing for unit.

SBPFL
Cylindrical bore
(with set screws)
SAPFL
Cylindrical bore
(with eccentric locking collar)
d 12 ~ 35 mm

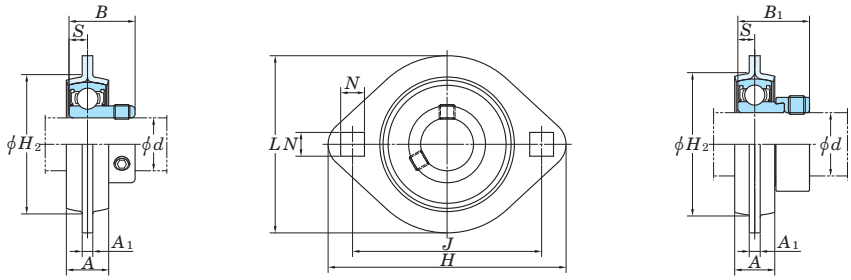

SBPFL SAPFL

Shaft Dia mm	Shaft Dia inch	Dimensions inch / mm H	L	A	A_1	J	N	H_2	S	SBPFL B	SAPFL B_1	Bolt Size inch / mm	Unit No.	Bearing No.
12													SBPFL201	SB201
	1/2	3 3/16	2 5/16	9/16	5/32	2 1/2	9/32	1 15/16	0.236	0.866	1.122	1/4	SBPFL201-8	SB201-8
15		81	59	14	4	63.5	7.1	49	6	22	28.5	M6	SBPFL202	SB202
	5/8												SBPFL202-10	SB202-10
17													SBPFL203	SB203
20	3/4	3 17/32	2 5/8	5/8	5/32	2 13/16	23/64	25/32	0.276	0.984	1.161	5/16	SBPFL204-12	SB204-12
		90	67	16	4	71.5	9	55	7	25	29.5	M8	SBPFL204	SB204
	7/8												SBPFL205-14	SB205-14
25	15/16	3 3/4	2 25/32	23/32	5/32	2 63/64	23/64	2 3/8	0.295	1.063	1.201	5/16	SBPFL205-15	SB205-15
		95	71	18	4	76	9	60	7.5	27	30.5	M8	SBPFL205	SB205
	1												SBPFL205-16	SB205-16
	1 1/8												SBPFL206-18	SB206-18
30		4 7/16	3 5/16	3/4	13/64	3 9/16	7/16	2 25/32	0.315	1.181	1.335	3/8	SBPFL206	SB206
	13/16	113	84	19	5.2	90.5	11	71	8	30	33.9	M10	SBPFL206-19	SB206-19
	1 1/4												SBPFL206-20	SB206-20
	1 1/4												SBPFL207-20	SB207-20
	15/16	4 13/16	3 11/16	7/8	13/64	3 15/16	7/16	3 3/16	0.335	1.260	1.437	3/8		
35	1 3/8	122	94	22	5.2	100	11	81	8.5	32	36.5	M10	SBPFL207-22	SB207-22
													SBPFL207	SB207
	1 7/16												SBPFL207-23	SB207-23

Note 1) H_2 is the minimum size of the mounting hole.

Variations of tolerance of distance between centers of bolt holes (Δ_{Js})

Unit : mm

Housing No.	Δ_{Js}
PFL203~PFL207	±0.4

Variations of tolerance of bolt hole diameter (Δ_{Ns})

Unit : mm

Housing No.	Δ_{Ns}
PFL203~PFL207	±0.25

Unit No.	Bearing No.	Housing No.	Basic Load Ratings kN C_r	C_{0r}	Factor f_0	Mass kg SBPFL	SAPFL
SAPFL201	SA201	PFL203	9.55	4.80	13.2	0.19	0.22
SAPFL201-8	SA201-8						
SAPFL202	SA202						
SAPFL202-10	SA202-10						
SAPFL203	SA203						
SAPFL204-12	SA204-12	PFL204	12.8	6.65	13.2	0.24	0.24
SAPFL204	SA204						
SAPFL205-14	SA205-14	PFL205	14.0	7.85	13.9	0.28	0.32
SAPFL205-15	SA205-15						
SAPFL205	SA205						
SAPFL205-16	SA205-16						
SAPFL206-18	SA206-18	PFL206	19.5	11.3	13.9	0.38	0.41
SAPFL206	SA206						
SAPFL206-19	SA206-19						
SAPFL206-20	SA206-20						
SAPFL207-20	SA207-20	PFL207	25.7	15.4	13.9	0.66	0.74
SAPFL207-21	SA207-21						
SAPFL207-22	SA207-22						
SAPFL207	SA207						
SAPFL207-23	SA207-23						

Remark For the dimensions and forms of applicable bearings, see the dimensional tables of ball bearing for unit.

UCT
Cylindrical bore (with set screws)
d 12 ~ (45) mm

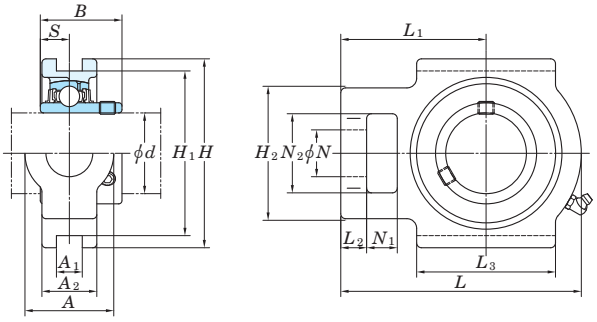

Shaft Dia. mm	Shaft Dia. inch	Dimensions inch / mm															Standard Unit No.	Standard Housing No.
d		A	A_1	A_2	H	H_1	H_2	L	L_1	L_2	L_3	N	N_1	N_2	B	S		
12	1/2	1 1/4	15/32	13/16	3 1/2	2 63/64	2	3 11/16	2 13/32	13/32	2	3/4	5/8	1 1/4	1.220	0.500	UCT201	T204
		32	12	21	89	76	51	94	61	10	51	19	16	32	31	12.7	UCT201-8	
15	5/8																UCT202	
																	UCT202-10	
17	3/4																UCT203	
																	UCT204-12	
20																	UCT204	
25	7/8	1 1/4	15/32	15/16	3 1/2	2 63/64	2	3 13/16	2 7/16	13/32	2	3/4	5/8	1 1/4	1.343	0.563	UCT205-14	T205
	15/16	32	12	24	89	76	51	97	62	10	51	19	16	32	34.1	14.3	UCT205-15	
																	UCT205	
	1																UCT205-16	
	1	1 15/32	15/32	1 3/32	4 1/32	3 1/2	2 7/32	4 7/16	2 3/4	13/32	2 1/4	7/8	5/8	1 15/32	1.500	0.626	UCTX05	TX05
		37	12	28	102	89	56	113	70	10	57	22	16	37	38.1	15.9	UCTX05-16	
	1	1 13/32	15/32	1 1/32	3 1/2	3 5/32	2 7/16	4 13/16	3	15/32	2 9/16	1 1/32	5/8	1 13/32	1.496	0.591	UCT305	T305
		36	12	26	89	80	62	122	76	12	65	26	16	36	38	15	UCT305-16	
30	1 1/8	1 15/32	15/32	1 3/32	4 1/32	3 1/2	2 7/32	4 7/16	2 3/4	13/32	2 1/4	7/8	5/8	1 15/32	1.500	0.626	UCT206-18	T206
	1 3/16	37	12	28	102	89	56	113	70	10	57	22	16	37	38.1	15.9	UCT206	
	1 1/4																UCT206-19	
																	UCT206-20	
	1 3/16	1 15/32	15/32	1 3/16	4 1/32	3 1/2	2 17/32	5 3/32	3 1/16	1/2	2 17/32	7/8	5/8	1 15/32	1.689	0.689	UCTX06	TX06
	1 1/4	37	12	30	102	89	64	129	78	13	64	22	16	37	42.9	17.5	UCTX06-19	
																	UCTX06-20	
	–	1 5/8	5/8	1 3/32	3 15/16	3 35/64	2 3/4	5 13/32	3 11/32	9/16	2 29/32	1 3/32	23/32	1 5/8	1.693	0.669	UCT306	T306
		41	16	28	100	90	70	137	85	14	74	28	18	41	43	17		
35	1 1/4	1 15/32	15/32	1 3/16	4 1/32	3 1/2	2 17/32	5 3/32	3 1/16	1/2	2 17/32	7/8	5/8	1 15/32	1.689	0.689	UCT207-20	T207
	1 5/16	37	12	30	102	89	64	129	78	13	64	22	16	37	42.9	17.5	UCT207-21	
	1 3/8																UCT207-22	
																	UCT207	
	1 7/16																UCT207-23	
	1 3/8	1 15/16	5/8	1 13/32	4 1/2	4 1/64	3 9/32	5 21/32	3 15/32	19/32	3 9/32	1 5/32	3/4	1 15/16	1.937	0.748	UCTX07-22	TX07
		49	16	36	114	102	83	144	88	15	83	29	19	49	49.2	19	UCTX07	
	1 7/16																UCTX07-23	
	–	1 25/32	5/8	1 1/4	4 3/8	3 15/16	2 15/16	5 29/32	3 11/16	19/32	3 5/32	1 3/16	25/32	1 25/32	1.890	0.748	UCT307	T307
		45	16	32	111	100	75	150	94	15	80	30	20	45	48	19		
40	1 1/2	1 15/16	5/8	1 5/16	4 1/2	4 1/64	3 9/32	5 21/32	3 15/32	5/8	3 9/32	1 5/32	3/4	1 15/16	1.937	0.748	UCT208-24	T208
	1 9/16	49	16	33	114	102	83	144	88	16	83	29	19	49	49.2	19	UCT208-25	
																	UCT208	
	1 1/2	1 15/16	5/8	1 13/32	4 19/32	4 1/64	3 9/32	5 21/32	3 7/16	19/32	3 9/32	1 5/32	3/4	1 15/16	1.937	0.748	UCTX08-24	TX08
		49	16	36	117	102	83	144	87	15	83	29	19	49	49.2	19	UCTX08	
	1 1/2	1 31/32	45/64	1 11/32	4 7/8	4 13/32	3 9/32	6 3/8	3 15/16	21/32	3 1/2	1 1/4	7/8	1 31/32	2.047	0.748	UCT308-24	T308
		50	18	34	124	112	83	162	100	17	89	32	22	50	52	19	UCT308	
45	1 5/8	1 15/16	5/8	1 3/8	4 19/32	4 1/64	3 9/32	5 21/32	3 7/16	5/8	3 9/32	1 5/32	3/4	1 15/16	1.937	0.748	UCT209-26	T209
	1 11/16	49	16	35	117	102	83	144	87	16	83	29	19	49	49.2	19	UCT209-27	
	1 3/4																UCT209-28	
																	UCT209	
	1 3/4	1 15/16	5/8	1 1/2	4 19/32	4 1/64	3 9/32	5 7/8	3 17/32	5/8	3 3/8	1 5/32	3/4	1 15/16	2.031	0.748	UCTX09-28	TX09
		49	16	38	117	102	83	149	90	16	86	29	19	49	51.6	19	UCTX09	

Remarks 1. In Part No. of unit and units with covers, fitting codes follow bore diameter numbers. (See **Table 10.5** in P.51.)
2. Part No. of applicable grease nipples are shown below.
B-1/4-28UNF ..... 201~210, X05~X09, 305~308
B-PT1/8 ..... 211~217, X10~X17, 309~328

With Pressed Steel Covers

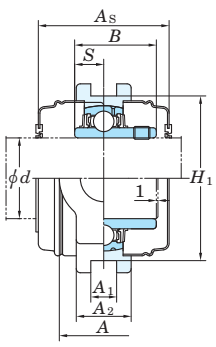

With Cast Iron Covers

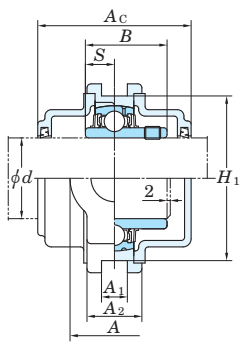

Variations of tolerance of groove width (Δ_{A1s}), variations of tolerance of distance between both grooves (Δ_{H1s}), and tolerance of symmetry of both groove sides (X)

Unit : mm

Housing No.			Δ_{A1s}	Δ_{H1s}	X
T204~T210	TX05~TX10	T305~T310	+0.2 0	0 −0.5	0.5
T211~T217	TX11~TX17	T311~T318	+0.3 0	0 −0.8	0.6
		T319~T322			0.7
		T324~T328			0.8

Form and dimensions of L_c of T204JE3 and T205JE3 (housing with cast iron covers) are shown below.

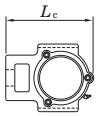

T204JE3 L_c = 97 mm
T205JE3 L_c = 102 mm

Bearing No.	Mass	Basic Load Ratings kN		Factor	With Pressed Steel Covers Unit No.		Dimension mm	inch	Mass	With Cast Iron Covers Unit No.		Dimension mm	inch	Mass
	kg	C_r	C_{0r}	f_0	Open Ends Type	Closed End Type	A_s		kg	Open Ends Type	Closed End Type	A_c		kg
UC201	0.81				UCT201C	UCT201CD	44	1 23/32	0.81	–	–	–	–	–
UC201-8	0.81				–	–	–	–	–	–	–	–	–	–
UC202	0.79				UCT202C	UCT202CD	44	1 23/32	0.79	–	–	–	–	–
UC202-10	0.79	12.8	6.65	13.2	–	–	–	–	–	–	–	–	–	–
UC203	0.78				UCT203C	UCT203CD	44	1 23/32	0.78	–	–	–	–	–
UC204-12	0.78				–	–	–	–	–	–	–	–	–	–
UC204	0.76				UCT204C	UCT204CD	44	1 23/32	0.76	UCT204FC	UCT204FCD	62	2 7/16	1.1
UC205-14	0.84				–	–	–	–	–	–	–	–	–	–
UC205-15	0.84	14.0	7.85	13.9	–	–	–	–	–	–	–	–	–	–
UC205	0.84				UCT205C	UCT205CD	48	1 7/8	0.84	UCT205FC	UCT205FCD	66	2 19/32	1.2
UC205-16	0.84				–	–	–	–	–	–	–	–	–	–
UCX05	1.4	19.5	11.3	13.9	UCTX05C	UCTX05CD	52	2 1/16	1.4	–	–	–	–	–
UCX05-16	1.4				–	–	–	–	–	–	–	–	–	–
UC305	1.4	21.2	10.9	12.6	–	–	–	–	–	UCT305C	UCT305CD	76	3	2.0
UC305-16	1.4				–	–	–	–	–	–	–	–	–	–
UC206-18	1.3				–	–	–	–	–	–	–	–	–	–
UC206	1.3	19.5	11.3	13.9	UCT206C	UCT206CD	52	2 1/16	1.3	UCT206FC	UCT206FCD	70	2 3/4	1.8
UC206-19	1.3				–	–	–	–	–	–	–	–	–	–
UC206-20	1.3				–	–	–	–	–	–	–	–	–	–
UCX06	1.7				UCTX06C	UCTX06CD	59	2 5/16	1.7	–	–	–	–	–
UCX06-19	1.7	25.7	15.4	13.9	–	–	–	–	–	–	–	–	–	–
UCX06-20	1.7				–	–	–	–	–	–	–	–	–	–
UC306	1.8	26.7	15.0	13.3	–	–	–	–	–	UCT306C	UCT306CD	82	3 7/32	2.4
UC207-20	1.6				–	–	–	–	–	–	–	–	–	–
UC207-21	1.6				–	–	–	–	–	–	–	–	–	–
UC207-22	1.6	25.7	15.4	13.9	–	–	–	–	–	–	–	–	–	–
UC207	1.6				UCT207C	UCT207CD	59	2 5/16	1.6	UCT207FC	UCT207FCD	78	3 1/16	2.3
UC207-23	1.6				–	–	–	–	–	–	–	–	–	–
UCX07-22	2.7				–	–	–	–	–	–	–	–	–	–
UCX07	2.7	29.1	17.8	14.0	UCTX07C	UCTX07CD	68	2 11/16	2.7	–	–	–	–	–
UCX07-23	2.7				–	–	–	–	–	–	–	–	–	–
UC307	2.3	33.4	19.3	13.2	–	–	–	–	–	UCT307C	UCT307CD	88	3 15/32	3.1
UC208-24	2.5				–	–	–	–	–	–	–	–	–	–
UC208-25	2.5	29.1	17.8	14.0	–	–	–	–	–	–	–	–	–	–
UC208	2.5				UCT208C	UCT208CD	68	2 11/16	2.5	UCT208FC	UCT208FCD	86	3 3/8	3.3
UCX08-24	2.6	34.1	21.3	14.0	–	–	–	–	–	–	–	–	–	–
UCX08	2.6				UCTX08C	UCTX08CD	68	2 11/16	2.6	–	–	–	–	–
UC308-24	3.0	40.7	24.0	13.2	–	–	–	–	–	–	–	–	–	–
UC308	3.0				–	–	–	–	–	UCT308C	UCT308CD	96	3 25/32	4.0
UC209-26	2.4				–	–	–	–	–	–	–	–	–	–
UC209-27	2.4	34.1	21.3	14.0	–	–	–	–	–	–	–	–	–	–
UC209-28	2.4				–	–	–	–	–	–	–	–	–	–
UC209	2.4				UCT209C	UCT209CD	68	2 11/16	2.4	UCT209FC	UCT209FCD	88	3 15/32	3.2
UCX09-28	2.9	35.1	23.3	14.4	–	–	–	–	–	–	–	–	–	–
UCX09	2.9				UCTX09C	UCTX09CD	73	2 7/8	2.9	–	–	–	–	–

3. As for the triple-lip seal type product (from 201 to 205 are the double-lip seal type products), supplementary code L3 (L2) follows the Part No. of unit or bearing. (Example of Part No. : UCT206JL3, UC206L3)
4. As for the dimensions and forms of applicable bearings, see the dimensional tables of ball bearing for unit.

UCT
Cylindrical bore (with set screws)
d (45) ~ (75) mm

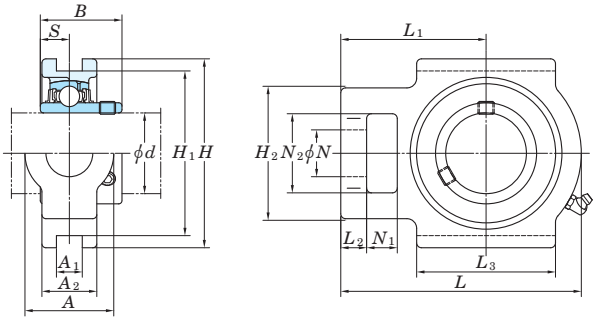

Shaft Dia. mm	Shaft Dia. inch	Dimensions inch / mm															Standard	
																	Unit No.	Housing No.
d		A	A_1	A_2	H	H_1	H_2	L	L_1	L_2	L_3	N	N_1	N_2	B	S		
45	1 3/4	2 5/32	45/64	1 1/2	5 7/16	4 59/64	3 17/32	7	4 11/32	23/32	3 13/16	1 11/32	15/16	2 5/32	2.244	0.866	UCT309-28	T309
		55	18	38	138	125	90	178	110	18	97	34	24	55	57	22	UCT309	
50	1 7/8																UCT210-30	T210
	1 15/16	1 15/16	5/8	1 15/32	4 19/32	4 1/64	3 9/32	5 7/8	3 17/32	5/8	3 3/8	1 5/32	3/4	1 15/16	2.031	0.748	UCT210-31	
		49	16	37	117	102	83	149	90	16	86	29	19	49	51.6	19	UCT210	
	2																UCT210-32	
	1 15/16	2 17/32	55/64	1 21/32	5 3/4	5 1/8	4 1/32	6 23/32	4 3/16	3/4	3 3/4	1 3/8	31/32	2 17/32	2.189	0.874	UCTX10-31	TX10
		64	22	42	146	130	102	171	106	19	95	35	25	64	55.6	22.2	UCTX10	
	2																UCTX10-32	
	–	2 13/32	25/32	1 9/16	5 15/16	5 33/64	3 27/32	7 17/32	4 19/32	25/32	4 3/16	1 15/32	1 1/16	2 13/32	2.402	0.866	UCT310	T310
		61	20	40	151	140	98	191	117	20	106	37	27	61	61	22		
55	2																UCT211-32	T211
	2 1/8	2 17/32	55/64	1 1/2	5 3/4	5 1/8	4 1/32	6 23/32	4 3/16	3/4	3 3/4	1 3/8	31/32	2 17/32	2.189	0.874	UCT211-34	
		64	22	38	146	130	102	171	106	19	95	35	25	64	55.6	22.2	UCT211	
	2 3/16																UCT211-35	
	2 3/16	2 17/32	55/64	1 23/32	5 3/4	5 1/8	4 1/32	7 5/8	4 11/16	3/4	4 1/32	1 3/8	1 1/4	2 17/32	2.563	1.000	UCTX11	TX11
	2 1/4	64	22	44	146	130	102	194	119	19	102	35	32	64	65.1	25.4	UCTX11-35	
																	UCTX11-36	
	2	2 19/32	55/64	1 23/32	6 13/32	5 29/32	4 1/8	8 5/32	5	13/16	4 17/32	1 17/32	1 5/32	2 19/32	2.598	0.984	UCT311-32	T311
		66	22	44	163	150	105	207	127	21	115	39	29	66	66	25	UCT311	
60	2 1/4																UCT212-36	T212
		2 17/32	55/64	1 21/32	5 3/4	5 1/8	4 1/32	7 5/8	4 11/16	3/4	4 1/32	1 3/8	1 1/4	2 17/32	2.563	1.000	UCT212	
	2 3/8	64	22	42	146	130	102	194	119	19	102	35	32	64	65.1	25.4	UCT212-38	
	2 7/16																UCT212-39	
		2 3/4	1 1/32	1 7/8	6 9/16	5 15/16	4 3/8	8 13/16	5 13/32	13/16	4 3/4	1 5/8	1 1/4	2 3/4	2.563	1.000	UCTX12	TX12
	2 7/16	70	26	48	167	151	111	224	137	21	121	41	32	70	65.1	25.4	UCTX12-39	
	–	2 25/32	55/64	1 13/16	7	6 19/64	4 7/16	8 21/32	5 5/16	29/32	4 27/32	1 5/8	1 7/32	2 25/32	2.795	1.024	UCT312	T312
		71	22	46	178	160	113	220	135	23	123	41	31	71	71	26		
65	2 1/2	2 3/4	1 1/32	1 23/32	6 9/16	5 15/16	4 3/8	8 13/16	5 13/32	13/16	4 3/4	1 5/8	1 1/4	2 3/4	2.563	1.000	UCT213-40	T213
		70	26	44	167	151	111	224	137	21	121	41	32	70	65.1	25.4	UCT213	
	2 1/2	2 3/4	1 1/32	1 7/8	6 9/16	5 15/16	4 3/8	8 13/16	5 13/32	13/16	4 3/4	1 5/8	1 1/4	2 3/4	2.937	1.189	UCTX13-40	TX13
		70	26	48	167	151	111	224	137	21	121	41	32	70	74.6	30.2	UCTX13	
	2 1/2	3 5/32	1 1/32	1 31/32	7 15/32	6 11/16	4 9/16	9 3/8	5 3/4	31/32	5 9/32	1 11/16	1 1/4	2 3/4	2.953	1.181	UCT313-40	T313
		80	26	50	190	170	116	238	146	25	134	43	32	70	75	30	UCT313	
70	2 3/4	2 3/4	1 1/32	1 13/16	6 9/16	5 15/16	4 3/8	8 13/16	5 13/32	13/16	4 3/4	1 5/8	1 1/4	2 3/4	2.937	1.189	UCT214-44	T214
		70	26	46	167	151	111	224	137	21	121	41	32	70	74.6	30.2	UCT214	
	2 3/4	2 3/4	1 1/32	1 7/8	6 9/16	5 15/16	4 3/8	9 1/8	5 1/2	13/16	4 3/4	1 5/8	1 1/4	2 3/4	3.063	1.331	UCTX14-44	TX14
		70	26	48	167	151	111	232	140	21	121	41	32	70	77.8	33.3	UCTX14	
	2 3/4	3 17/32	1 1/32	2 1/16	7 15/16	7 3/32	5 1/8	9 29/32	6 3/32	31/32	5 1/2	1 13/16	1 13/32	3 11/32	3.071	1.299	UCT314-44	T314
		90	26	52	202	180	130	252	155	25	140	46	36	85	78	33	UCT314	
75	2 15/16	2 3/4	1 1/32	1 7/8	6 9/16	5 15/16	4 3/8	9 1/8	5 1/2	13/16	4 3/4	1 5/8	1 1/4	2 3/4	3.063	1.331	UCT215-47	T215
		70	26	48	167	151	111	232	140	21	121	41	32	70	77.8	33.3	UCT215	
	3																UCT215-48	
	2 15/16	2 3/4	1 7/64	1 7/8	7 1/4	6 1/2	4 3/8	9 1/4	5 1/2	13/16	4 3/4	1 5/8	1 1/4	2 3/4	3.252	1.311	UCTX15-47	TX15
		70	28	48	184	165	111	235	140	21	121	41	32	70	82.6	33.3	UCTX15	
	3																UCTX15-48	

Remarks 1. In Part No. of unit and units with covers, fitting codes follow bore diameter numbers. (See **Table 10.5** in P.51.)
2. Part No. of applicable grease nipples are shown below.
B-1/4-28UNF ..... 201~210, X05~X09, 305~308
B-PT1/8 ..... 211~217, X10~X17, 309~328

With Pressed Steel Covers

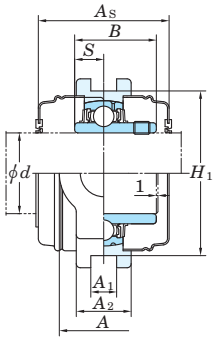

With Cast Iron Covers

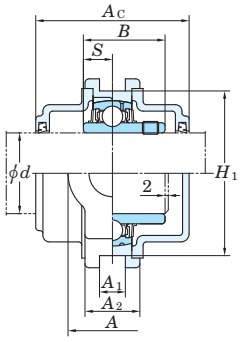

Variations of tolerance of groove width (Δ_{A1s}), variations of tolerance of distance between both grooves (Δ_{H1s}), and tolerance of symmetry of both groove sides (X)

Unit : mm

Housing No.			Δ_{A1s}	Δ_{H1s}	X
T204~T210	TX05~TX10	T305~T310	+0.2 0	0 −0.5	0.5
T211~T217	TX11~TX17	T311~T318	+0.3 0	0 −0.8	0.6
		T319~T322			0.7
		T324~T328			0.8

Form and dimensions of L_c of T204JE3 and T205JE3 (housing with cast iron covers) are shown below.

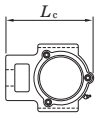

T204JE3 L_c = 97 mm
T205JE3 L_c = 102 mm

Bearing No.	Mass	Basic Load Ratings kN		Factor	With Pressed Steel Covers Unit No.		Dimension mm	inch	Mass	With Cast Iron Covers Unit No.		Dimension mm	inch	Mass
	kg	C_r	C_{0r}	f_0	Open Ends Type	Closed End Type	A_s		kg	Open Ends Type	Closed End Type	A_c		kg
UC309-28	4.1	48.9	29.5	13.3	–	–	–	–	–	–	–	–	–	–
UC309	4.1				–	–	–	–	–	UCT309C	UCT309CD	102	4 1/32	5.4
UC210-30	2.6	35.1	23.3	14.4	–	–	–	–	–	–	–	–	–	–
UC210-31	2.6				–	–	–	–	–	–	–	–	–	–
UC210	2.6				UCT210C	UCT210CD	73	2 7/8	2.6	UCT210FC	UCT210FCD	97	3 13/16	3.6
UC210-32	2.6				–	–	–	–	–	–	–	–	–	–
UCX10-31	4.4	43.4	29.4	14.4	–	–	–	–	–	–	–	–	–	–
UCX10	4.4				UCTX10C	UCTX10CD	75	2 15/16	4.4	–	–	–	–	–
UCX10-32	4.4				–	–	–	–	–	–	–	–	–	–
UC310	4.9	62.0	38.3	13.2	–	–	–	–	–	UCT310C	UCT310CD	110	4 11/32	6.5
UC211-32	4.0	43.4	29.4	14.4	–	–	–	–	–	–	–	–	–	–
UC211-34	4.0				–	–	–	–	–	–	–	–	–	–
UC211	4.0				UCT211C	UCT211CD	75	2 15/16	4.0	UCT211FC	UCT211FCD	99	3 29/32	5.2
UC211-35	4.0				–	–	–	–	–	–	–	–	–	–
UCX11	5.3	52.4	36.2	14.4	UCTX11C	UCTX11CD	88	3 15/32	5.3	–	–	–	–	–
UCX11-35	5.3				–	–	–	–	–	–	–	–	–	–
UCX11-36	5.3				–	–	–	–	–	–	–	–	–	–
UC311-32	6.1	71.6	45.0	13.2	–	–	–	–	–	–	–	–	–	–
UC311	6.1				–	–	–	–	–	UCT311C	UCT311CD	114	4 1/2	7.9
UC212-36	4.9	52.4	36.2	14.4	–	–	–	–	–	–	–	–	–	–
UC212	4.9				UCT212C	UCT212CD	88	3 15/32	4.9	UCT212FC	UCT212FCD	114	4 1/2	6.4
UC212-38	4.9				–	–	–	–	–	–	–	–	–	–
UC212-39	4.9				–	–	–	–	–	–	–	–	–	–
UCX12	7.4	57.2	40.1	14.4	UCTX12C	UCTX12CD	88	3 15/32	7.4	–	–	–	–	–
UCX12-39	7.4				–	–	–	–	–	–	–	–	–	–
UC312	7.6	81.9	52.2	13.2	–	–	–	–	–	UCT312C	UCT312CD	124	4 7/8	9.9
UC213-40	6.9	57.2	40.1	14.4	–	–	–		–	–	–	–		–
UC213	6.9				UCT213C	UCT213CD	88	3 15/32	6.9	UCT213FC	UCT213FCD	114	4 1/2	8.6
UCX13-40	7.6	62.2	44.1	14.5	–	–	–	–	–	–	–	–	–	–
UCX13	7.6				UCTX13C	UCTX13CD	98	3 27/32	7.6	–	–	–	–	–
UC313-40	9.3	92.7	59.9	13.2	–	–	–	–	–	–	–	–	–	–
UC313	9.3				–	–	–	–	–	UCT313C	UCT313CD	122	4 13/16	11.4
UC214-44	7.0	62.2	44.1	14.5	–	–	–	–	–	–	–	–	–	–
UC214	7.0				UCT214C	UCT214CD	98	3 27/32	7.0	UCT214FC	UCT214FCD	124	4 7/8	8.9
UCX14-44	7.9	67.4	48.3	14.5	–	–	–	–	–	–	–	–	–	–
UCX14	7.9				UCTX14C	UCTX14CD	98	3 27/32	7.9	–	–	–	–	–
UC314-44	11.1	104	68.2	13.2	–	–	–	–	–	–	–	–	–	–
UC314	11.1				–	–	–	–	–	UCT314C	UCT314CD	124	4 7/8	13.4
UC215-47	7.3	67.4	48.3	14.5	–	–	–	–	–	–	–	–	–	–
UC215	7.3				UCT215C	UCT215CD	98	3 27/32	7.3	UCT215FC	UCT215FCD	124	4 7/8	9.2
UC215-48	7.3				–	–	–	–	–	–	–	–	–	–
UCX15-47	8.7	72.7	53.0	14.6	–	–	–	–	–	–	–	–	–	–
UCX15	8.7				UCTX15C	UCTX15CD	108	4 1/4	8.7	–	–	–	–	–
UCX15-48	8.7				–	–	–	–	–	–	–	–	–	–

3. As for the triple-lip seal type product (from 201 to 205 are the double-lip seal type products), supplementary code L3 (L2) follows the Part No. of unit or bearing. (Example of Part No. : UCT206JL3, UC206L3)
4. As for the dimensions and forms of applicable bearings, see the dimensional tables of ball bearing for unit.

UCT
Cylindrical bore (with set screws)
d (75) ~ 140 mm

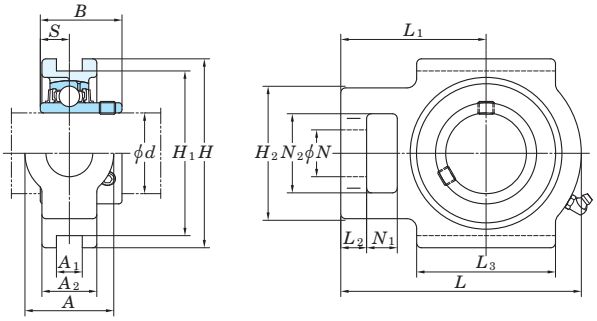

Shaft Dia. mm	Shaft Dia. inch	Dimensions inch / mm															Standard Unit No.	Standard Housing No.
d		A	A_1	A_2	H	H_1	H_2	L	L_1	L_2	L_3	N	N_1	N_2	B	S		
75	2 15/16	3 17/32	1 1/32	2 5/32	8 1/2	7 9/16	5 3/16	10 5/16	6 5/16	31/32	5 29/32	1 13/16	1 13/32	3 11/32	3.228	1.260	UCT315-47	T315
		90	26	55	216	192	132	262	160	25	150	46	36	85	82	32	UCT315	
	3																UCT315-48	
80	3 1/8	2 3/4	1 1/32	2	7 1/4	6 1/2	4 3/8	9 1/4	5 1/2	13/16	4 3/4	1 5/8	1 1/4	2 3/4	3.252	1.311	UCT216-50	T216
		70	26	51	184	165	111	235	140	21	121	41	32	70	82.6	33.3	UCT216	
	–	2 7/8	1 7/64	2 1/8	7 25/32	6 13/16	4 7/8	10 1/4	6 3/8	1 3/32	6 3/16	1 7/8	1 1/2	2 7/8	3.374	1.343	UCTX16	TX16
		73	28	54	198	173	124	260	162	28	157	48	38	73	85.7	34.1		
	–	4 1/32	1 3/16	2 3/8	9 1/16	8 1/32	5 29/32	11 3/32	6 27/32	1 3/32	6 5/16	2 3/32	1 21/32	3 27/32	3.386	1.339	UCT316	T316
		102	30	60	230	204	150	282	174	28	160	53	42	98	86	34		
85	3 1/4	2 7/8	1 3/16	2 1/8	7 25/32	6 13/16	4 7/8	10 1/4	6 3/8	1 5/32	6 3/16	1 7/8	1 1/2	2 7/8	3.374	1.343	UCT217-52	T217
		73	30	54	198	173	124	260	162	29	157	48	38	73	85.7	34.1	UCT217	
	3 7/16	2 7/8	1 7/64	2 1/8	7 25/32	6 13/16	4 7/8	10 1/4	6 3/8	1 3/32	6 3/16	1 7/8	1 1/2	2 7/8	3.780	1.563	UCTX17	TX17
		73	28	54	198	173	124	260	162	28	157	48	38	73	96	39.7	UCTX17-55	
	–	4 1/32	1 17/64	2 17/32	9 7/16	8 27/64	5 31/32	11 23/32	7 7/32	1 3/16	6 11/16	2 3/32	1 21/32	3 27/32	3.780	1.575	UCT317	T317
		102	32	64	240	214	152	298	183	30	170	53	42	98	96	40		
90	3 1/2	4 11/32	1 17/64	2 19/32	10 1/32	8 31/32	6 5/16	12 9/32	7 9/16	1 3/16	6 7/8	2 1/4	1 13/16	4 3/16	3.780	1.575	UCT318-56	T318
		110	32	66	255	228	160	312	192	30	175	57	46	106	96	40	UCT318	
95	–	4 11/32	1 3/8	2 27/32	10 5/8	9 29/64	6 1/2	12 11/16	7 3/4	1 7/32	7 3/32	2 1/4	1 13/16	4 3/16	4.055	1.614	UCT319	T319
		110	35	72	270	240	165	322	197	31	180	57	46	106	103	41		
100	3 15/16	4 23/32	1 3/8	2 15/16	11 13/32	10 15/64	6 7/8	13 19/32	8 9/32	1 1/4	7 7/8	2 5/16	1 7/8	4 17/32	4.252	1.654	UCT320	T320
	4	120	35	75	290	260	175	345	210	32	200	59	48	115	108	42	UCT320-63	
																	UCT320-64	
105	–	4 23/32	1 3/8	2 15/16	11 13/32	10 15/64	6 7/8	13 19/32	8 9/32	1 1/4	7 7/8	2 5/16	1 7/8	4 17/32	4.409	1.732	UCT321	T321
		120	35	75	290	260	175	345	210	32	200	59	48	115	112	44		
110	–	5 1/8	1 1/2	3 5/32	12 19/32	11 7/32	7 9/32	15 5/32	9 1/4	1 1/2	8 15/32	2 9/16	2 1/16	4 29/32	4.606	1.811	UCT322	T322
		130	38	80	320	285	185	385	235	38	215	65	52	125	117	46		
120	–	5 1/2	1 49/64	3 17/32	13 31/32	12 9/32	8 9/32	17	10 1/2	1 21/32	9 1/16	2 3/4	2 3/8	5 1/2	4.961	2.008	UCT324	T324
		140	45	90	355	320	210	432	267	42	230	70	60	140	126	51		
130	–	5 29/32	1 31/32	3 15/16	15 5/32	13 25/32	8 21/32	18 5/16	11 7/32	1 25/32	9 7/16	2 15/16	2 9/16	5 29/32	5.315	2.126	UCT326	T326
		150	50	100	385	350	220	465	285	45	240	75	65	150	135	54		
140	–	6 3/32	1 31/32	3 15/16	16 11/32	14 61/64	9 1/16	20 9/32	12 13/32	1 31/32	10 1/32	3 5/32	2 3/4	6 5/16	5.709	2.323	UCT328	T328
		155	50	100	415	380	230	515	315	50	255	80	70	160	145	59		

Remarks 1. In Part No. of unit and units with covers, fitting codes follow bore diameter numbers. (See **Table 10.5** in P.51.)
2. Part No. of applicable grease nipples are shown below.
B-1/4-28UNF ..... 201~210, X05~X09, 305~308
B-PT1/8 ..... 211~217, X10~X17, 309~328

With Pressed Steel Covers

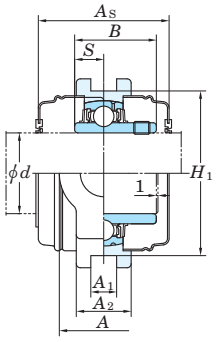

With Cast Iron Covers

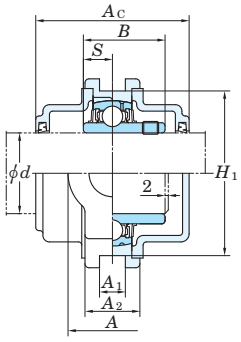

Variations of tolerance of groove width (Δ_{A1s}), variations of tolerance of distance between both grooves (Δ_{H1s}), and tolerance of symmetry of both groove sides (X)

Unit : mm

Housing No.			Δ_{A1s}	Δ_{H1s}	X
T204~T210	TX05~TX10	T305~T310	+0.2 0	0 −0.5	0.5
T211~T217	TX11~TX17	T311~T318	+0.3 0	0 −0.8	0.6
		T319~T322			0.7
		T324~T328			0.8

Form and dimensions of L_c of T204JE3 and T205JE3 (housing with cast iron covers) are shown below.

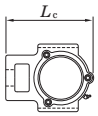

T204JE3 L_c = 97 mm
T205JE3 L_c = 102 mm

Bearing No.	Mass	Basic Load Ratings kN		Factor	With Pressed Steel Covers Unit No.		Dimension mm	inch	Mass	With Cast Iron Covers Unit No.		Dimension mm	inch	Mass
	kg	C_r	C_{0r}	f_0	Open Ends Type	Closed End Type	A_s		kg	Open Ends Type	Closed End Type	A_c		kg
UC315-47	13.0				–	–	–	–	–	–	–	–	–	–
UC315	13.0	113	77.2	13.2	–	–	–	–	–	UCT315C	UCT315CD	134	5 9/32	15.5
UC315-48	13.0				–	–	–	–	–	–	–	–	–	–
UC216-50	8.2	72.7	53.0	14.6	–	–	–	–	–	–	–	–	–	–
UC216	8.2				UCT216C	UCT216CD	108	4 1/4	8.2	UCT216FC	UCT216FCD	138	5 7/16	10.6
UCX16	11.7	84.0	61.9	14.5	UCTX16C	UCTX16CD	112	4 13/32	11.7	–	–	–	–	–
UC316	16.2	123	86.7	13.3	–	–	–	–	–	UCT316C	UCT316CD	138	5 7/16	19.1
UC217-52	11.0	84.0	61.9	14.5	–	–	–	–	–	–	–	–	–	–
UC217	11.0				UCT217C	UCT217CD	112	4 13/32	11.0	UCT217FC	UCT217FCD	142	5 19/32	13.7
UCX17	11.7	96.1	71.5	14.5	UCTX17C	UCTX17CD	122	4 13/16	11.7	–	–	–	–	–
UCX17-55	11.7				–	–	–	–	–	–	–	–	–	–
UC317	19.0	133	96.8	13.3	–	–	–	–	–	UCT317C	UCT317CD	146	5 3/4	22.3
UC318-56	21.6	143	107	13.3	–	–	–	–	–	–	–	–	–	–
UC318	21.6				–	–	–	–	–	UCT318C	UCT318CD	150	5 29/32	25.4
UC319	24.9	153	119	13.3	–	–	–	–	–	UCT319C	UCT319CD	162	6 3/8	29.2
UC320	30.7				–	–	–	–	–	UCT320C	UCT320CD	174	6 27/32	36.3
UC320-63	30.7	173	141	13.2	–	–	–	–	–	–	–	–	–	–
UC320-64	30.7				–	–	–	–	–	–	–	–	–	–
UC321	36.7	184	153	13.2	–	–	–	–	–	UCT321C	UCT321CD	178	7	42.7
UC322	39.7	205	180	13.2	–	–	–	–	–	UCT322C	UCT322CD	188	7 13/32	46.5
UC324	54.4	207	185	13.5	–	–	–	–	–	UCT324C	UCT324CD	196	7 23/32	63.9
UC326	69.3	229	214	13.6	–	–	–	–	–	UCT326C	UCT326CD	214	8 7/16	81.4
UC328	85.1	253	246	13.6	–	–	–	–	–	UCT328C	UCT328CD	222	8 3/4	101

3. As for the triple-lip seal type product (from 201 to 205 are the double-lip seal type products), supplementary code L3 (L2) follows the Part No. of unit or bearing. (Example of Part No. : UCT206JL3, UC206L3)
4. As for the dimensions and forms of applicable bearings, see the dimensional tables of ball bearing for unit.

UCT-E
Cylindrical bore (with set screws)
d 12 ~ 50 mm

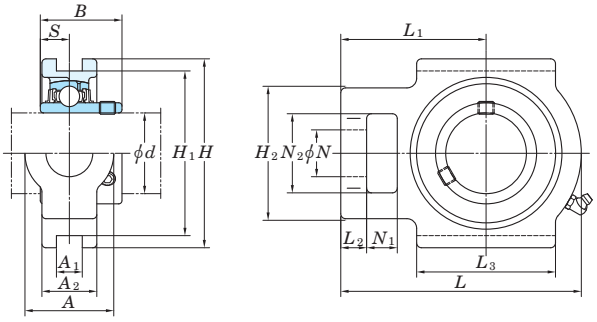

Shaft Dia. mm	Shaft Dia. inch	Dimensions inch / mm															Unit No.
d		A	A_1	A_2	H	H_1	H_2	L	L_1	L_2	L_3	N	N_1	N_2	B	S	
12																	UCT201E
	1/2																UCT201-8E
15		1 1/4	17/32	13/16	3 1/2	3	2	3 11/16	2 13/32	13/32	2	3/4	5/8	1 1/4	1.220	0.500	UCT202E
	5/8	32	13.5	21	89	76.2	51	94	61	10	51	19	16	32	31	12.7	UCT202-10E
17																	UCT203E
	3/4																UCT204-12E
20																	UCT204E
25	7/8																UCT205-14E
	15/16	1 1/4	17/32	15/16	3 1/2	3	2	3 13/16	2 7/16	13/32	2	3/4	5/8	1 1/4	1.343	0.563	UCT205-15E
		32	13.5	24	89	76.2	51	97	62	10	51	19	16	32	34.1	14.3	UCT205E
	1																UCT205-16E
		1 15/32	17/32	1 3/32	4 1/32	3 1/2	2 7/32	4 7/16	2 3/4	13/32	2 1/4	7/8	5/8	1 15/32	1.500	0.626	UCTX05E
	1	37	13.5	28	102	88.9	56	113	70	10	57	22	16	37	38.1	15.9	UCTX05-16E
30	1 1/8																UCT206-18E
		1 15/32	17/32	1 3/32	4 1/32	3 1/2	2 7/32	4 7/16	2 3/4	13/32	2 1/4	7/8	5/8	1 15/32	1.500	0.626	UCT206E
	1 3/16	37	13.5	28	102	88.9	56	113	70	10	57	22	16	37	38.1	15.9	UCT206-19E
	1 1/4																UCT206-20E
		1 15/32	17/32	1 3/16	4 1/32	3 1/2	2 17/32	5 3/32	3 1/16	1/2	2 17/32	7/8	5/8	1 15/32	1.689	0.689	UCTX06E
	1 3/16	37	13.5	30	102	88.9	64	129	78	13	64	22	16	37	42.9	17.5	UCTX06-19E
	1 1/4																UCTX06-20E
35	1 1/4																UCT207-20E
	1 5/16																UCT207-21E
	1 3/8	1 15/32	17/32	1 3/16	4 1/32	3 1/2	2 17/32	5 3/32	3 1/16	1/2	2 17/32	7/8	5/8	1 15/32	1.689	0.689	UCT207-22E
		37	13.5	30	102	88.9	64	129	78	13	64	22	16	37	42.9	17.5	UCT207E
	1 7/16																UCT207-23E
	1 3/8	1 15/16	11/16	1 13/32	4 1/2	4	3 9/32	5 21/32	3 15/32	19/32	3 9/32	1 5/32	3/4	1 15/16	1.937	0.748	UCTX07-22E
		49	17.5	36	114	101.6	83	144	88	15	83	29	19	49	49.2	19	UCTX07E
	1 7/16																UCTX07-23E
40	1 1/2																UCT208-24E
	1 9/16	1 15/16	11/16	1 5/16	4 1/2	4	3 9/32	5 21/32	3 15/32	19/32	3 9/32	1 5/32	3/4	1 15/16	1.937	0.748	UCT208-25E
		49	17.5	33	114	101.6	83	144	88	16	83	29	19	49	49.2	19	UCT208E
	1 1/2	1 15/16	11/16	1 13/32	4 19/32	4	3 9/32	5 21/32	3 7/16	19/32	3 9/32	1 5/32	3/4	1 15/16	1.937	0.748	UCTX08-24E
		49	17.5	36	117	101.6	83	144	87	15	83	29	19	49	49.2	19	UCTX08E
45	1 5/8																UCT209-26E
	1 11/16	1 15/16	11/16	1 3/8	4 19/32	4	3 9/32	5 21/32	3 7/16	5/8	3 9/32	1 5/32	3/4	1 15/16	1.937	0.748	UCT209-27E
	1 3/4	49	17.5	35	117	101.6	83	144	87	16	83	29	19	49	49.2	19	UCT209-28E
																	UCT209E
	1 3/4	1 15/16	11/16	1 1/2	4 19/32	4	3 9/32	5 7/8	3 17/32	5/8	3 3/8	1 5/32	3/4	1 15/16	2.031	0.748	UCTX09-28E
		49	17.5	38	117	101.6	83	149	90	16	86	29	19	49	51.6	19	UCTX09E
50	1 7/8																UCT210-30E
	1 15/16	1 15/16	11/16	1 15/32	4 19/32	4	3 9/32	5 7/8	3 17/32	5/8	3 3/8	1 5/32	3/4	1 15/16	2.031	0.748	UCT210-31E
		49	17.5	37	117	101.6	83	149	90	16	86	29	19	49	51.6	19	UCT210E
	2																UCT210-32E
	1 15/16	2 17/32	1 1/16	1 21/32	5 3/4	5 1/8	4 1/64	6 23/32	4 3/16	3/4	3 3/4	1 3/8	31/32	2 17/32	2.189	0.874	UCTX10-31E
		64	27	42	146	130.17	102	171	106	19	95	35	25	64	55.6	22.2	UCTX10E
	2																UCTX10-32E

Remarks 1. In Part No. of unit and units with covers, fitting codes follow bore diameter numbers. (See **Table 10.5** in P.51.)
2. Part No. of applicable grease nipples are shown below.
B-1/4-28UNF ..... 201~210, X05~X09, 305~308
B-PT1/8 ..... 211~217, X10~X17, 309~328

Variations of tolerance of groove width (Δ_{A1s}), variations of tolerance of distance between both grooves (Δ_{H1s}), and tolerance of symmetry of both groove sides (X)

Unit : mm

Housing No.		Δ_{A1s}	Δ_{H1s}	X
T204E~T210E	TX05E~TX10E	+0.2 0	0 −0.5	0.5
T211E~T217E	TX11E~TX17E	+0.3 0	0 −0.8	0.6

Housing No.	Bearing No.	Basic Load Ratings kN C_r	Basic Load Ratings kN C_{0r}	Factor f_0	Mass kg
T204E	UC201 UC201-8 UC202 UC202-10 UC203 UC204-12 UC204	12.8	6.65	13.2	0.81 0.79 0.78 0.76
T205E	UC205-14 UC205-15 UC205 UC205-16	14.0	7.85	13.9	0.84
TX05E	UCX05 UCX05-16	19.5	11.3	13.9	1.4
T206E	UC206-18 UC206 UC206-19 UC206-20	19.5	11.3	13.9	1.3
TX06E	UCX06 UCX06-19 UCX06-20	25.7	15.4	13.9	1.7
T207E	UC207-20 UC207-21 UC207-22 UC207 UC207-23	25.7	15.4	13.9	1.6
TX07E	UCX07-22 UCX07 UCX07-23	29.1	17.8	14.0	2.7
T208E	UC208-24 UC208-25 UC208	29.1	17.8	14.0	2.5
TX08E	UCX08-24 UCX08	34.1	21.3	14.0	2.6
T209E	UC209-26 UC209-27 UC209-28 UC209	34.1	21.3	14.0	2.4
TX09E	UCX09-28 UCX09	35.1	23.3	14.4	2.9
T210E	UC210-30 UC210-31 UC210 UC210-32	35.1	23.3	14.4	2.6
TX10E	UCX10-31 UCX10 UCX10-32	43.4	29.4	14.4	4.4

3. As for the triple-lip seal type product (from 201 to 205 are the double-lip seal type products), supplementary code L3 (L2) follows the Part No. of unit or bearing. (Example of Part No. : UCT206EL3, UC206L3)
4. As for the dimensions and forms of applicable bearings, see the dimensional tables of ball bearing for unit.

UCT-E
Cylindrical bore (with set screws)
d 55 ~ 85 mm

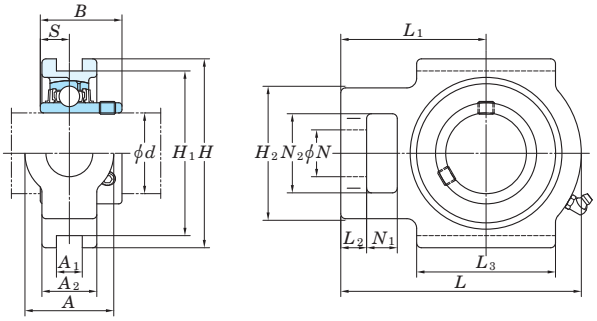

Shaft Dia. mm	Shaft Dia. inch	Dimensions inch / mm															Unit No.
d		A	A_1	A_2	H	H_1	H_2	L	L_1	L_2	L_3	N	N_1	N_2	B	S	
55	2																UCT211-32E
	2 1/8	2 17/32	1 1/16	1 1/2	5 3/4	5 1/8	4 1/64	6 23/32	4 3/16	3/4	3 3/4	1 3/8	31/32	2 17/32	2.189	0.874	UCT211-34E
		64	27	38	146	130.17	102	171	106	19	95	35	25	64	55.6	22.2	UCT211E
	2 3/16																UCT211-35E
		2 17/32	1 1/16	1 23/32	5 3/4	5 1/8	4 1/64	7 5/8	4 11/16	3/4	4 1/32	1 3/8	1 1/4	2 17/32	2.563	1.000	UCTX11E
	2 3/16	64	27	44	146	130.17	102	194	119	19	102	35	32	64	65.1	25.4	UCTX11-35E
	2 1/4																UCTX11-36E
60	2 1/4																UCT212-36E
		2 17/32	1 1/16	1 21/32	5 3/4	5 1/8	4 1/64	7 5/8	4 11/16	3/4	4 1/32	1 3/8	1 1/4	2 17/32	2.563	1.000	UCT212E
	2 3/8	64	27	42	146	130.17	102	194	119	19	102	35	32	64	65.1	25.4	UCT212-38E
	2 7/16																UCT212-39E
		2 3/4	1 1/16	1 7/8	6 9/16	5 15/16	4 3/8	8 13/16	5 13/32	13/16	4 3/4	1 5/8	1 1/4	2 3/4	2.563	1.000	UCTX12E
	2 7/16	70	27	48	167	150.8	111	224	137	21	121	41	32	70	65.1	25.4	UCTX12-39E
65	2 1/2	2 3/4	1 1/16	1 23/32	6 9/16	5 15/16	4 3/8	8 13/16	5 13/32	13/16	4 3/4	1 5/8	1 1/4	2 3/4	2.563	1.000	UCT213-40E
		70	27	44	167	150.8	111	224	137	21	121	41	32	70	65.1	25.4	UCT213E
	2 1/2	2 3/4	1 1/16	1 7/8	6 9/16	5 15/16	4 3/8	8 13/16	5 13/32	13/16	4 3/4	1 5/8	1 1/4	2 3/4	2.937	1.189	UCTX13-40E
		70	27	48	167	150.8	111	224	137	21	121	41	32	70	74.6	30.2	UCTX13E
70	2 3/4	2 3/4	1 1/16	1 13/16	6 9/16	5 15/16	4 3/8	8 13/16	5 13/32	13/16	4 3/4	1 5/8	1 1/4	2 3/4	2.937	1.189	UCT214-44E
		70	27	46	167	150.8	111	224	137	21	121	41	32	70	74.6	30.2	UCT214E
	2 3/4	2 3/4	1 1/16	1 7/8	6 9/16	5 15/16	4 3/8	9 1/8	5 1/2	13/16	4 3/4	1 5/8	1 1/4	2 3/4	3.063	1.331	UCTX14-44E
		70	27	48	167	150.8	111	232	140	21	121	41	32	70	77.8	33.3	UCTX14E
75	2 15/16	2 3/4	1 1/16	1 7/8	6 9/16	5 15/16	4 3/8	9 1/8	5 1/2	13/16	4 3/4	1 5/8	1 1/4	2 3/4	3.063	1.331	UCT215-47E
		70	27	48	167	150.8	111	232	140	21	121	41	32	70	77.8	33.3	UCT215E
	3																UCT215-48E
	2 15/16	2 3/4	1 1/16	1 7/8	7 1/4	6 1/2	4 3/8	9 1/4	5 1/2	13/16	4 3/4	1 5/8	1 1/4	2 3/4	3.252	1.311	UCTX15-47E
		70	27	48	184	165	111	235	140	21	121	41	32	70	82.6	33.3	UCTX15E
	3																UCTX15-48E
80	3 1/8	2 3/4	1 1/16	2	7 1/4	6 1/2	4 3/8	9 1/4	5 1/2	13/16	4 3/4	1 5/8	1 1/4	2 3/4	3.252	1.311	UCT216-50E
		70	27	51	184	165	111	235	140	21	121	41	32	70	82.6	33.3	UCT216E
	–	3 1/2	1 13/16	2 11/16	7 25/32	6 13/16	4 7/8	10 1/4	6 3/8	1 3/32	6 3/16	1 7/8	1 1/2	2 7/8	3.374	1.343	UCTX16E
		89	46	68	198	173	124	260	162	28	157	48	38	73	85.7	34.1	
85	3 1/4	3 1/2	1 13/16	2 11/16	7 25/32	6 13/16	4 7/8	10 1/4	6 3/8	1 5/32	6 3/16	1 7/8	1 1/2	2 7/8	3.374	1.343	UCT217-52E
		89	46	68	198	173	124	260	162	29	157	48	38	73	85.7	34.1	UCT217E
		3 1/2	1 13/16	2 11/16	7 25/32	6 13/16	4 7/8	10 1/4	6 3/8	1 3/32	6 3/16	1 7/8	1 1/2	2 7/8	3.780	1.563	UCTX17E
	3 7/16	89	46	68	198	173	124	260	162	28	157	48	38	73	96	39.7	UCTX17-55E

Remarks 1. In Part No. of unit and units with covers, fitting codes follow bore diameter numbers. (See **Table 10.5** in P.51.)
2. Part No. of applicable grease nipples are shown below.
B-1/4-28UNF ..... 201~210, X05~X09, 305~308
B-PT1/8 ..... 211~217, X10~X17, 309~328

Variations of tolerance of groove width (Δ_{A1s}), variations of tolerance of distance between both grooves (Δ_{H1s}), and tolerance of symmetry of both groove sides (X)

Unit : mm

Housing No.		Δ_{A1s}	Δ_{H1s}	X
T204E~T210E	TX05E~TX10E	+0.2 0	0 −0.5	0.5
T211E~T217E	TX11E~TX17E	+0.3 0	0 −0.8	0.6

Housing No.	Bearing No.	Basic Load Ratings kN C_r	Basic Load Ratings kN C_{0r}	Factor f_0	Mass kg
T211E	UC211-32 UC211-34 UC211 UC211-35	43.4	29.4	14.4	4.0
TX11E	UCX11 UCX11-35 UCX11-36	52.4	36.2	14.4	5.3
T212E	UC212-36 UC212 UC212-38 UC212-39	52.4	36.2	14.4	4.9
TX12E	UCX12 UCX12-39	57.2	40.1	14.4	7.4
T213E	UC213-40 UC213	57.2	40.1	14.4	6.9
TX13E	UCX13-40 UCX13	62.2	44.1	14.5	7.6
T214E	UC214-44 UC214	62.2	44.1	14.5	7.0
TX14E	UCX14-44 UCX14	67.4	48.3	14.5	7.9
T215E	UC215-47 UC215 UC215-48	67.4	48.3	14.5	7.3
TX15E	UCX15-47 UCX15 UCX15-48	72.7	53.0	14.6	8.7
T216E	UC216-50 UC216	72.7	53.0	14.6	8.2
TX16E	UCX16	84.0	61.9	14.5	12.4
T217E	UC217-52 UC217	84.0	61.9	14.5	12.1
TX17E	UCX17 UCX17-55	96.1	71.5	14.5	13.3

3. As for the triple-lip seal type product (from 201 to 205 are the double-lip seal type products), supplementary code L3 (L2) follows the Part No. of unit or bearing. (Example of Part No. : UCT206EL3, UC206L3)
4. As for the dimensions and forms of applicable bearings, see the dimensional tables of ball bearing for unit.

UKT
Tapered bore (with adapter)
d_1 20 ~ (50) mm

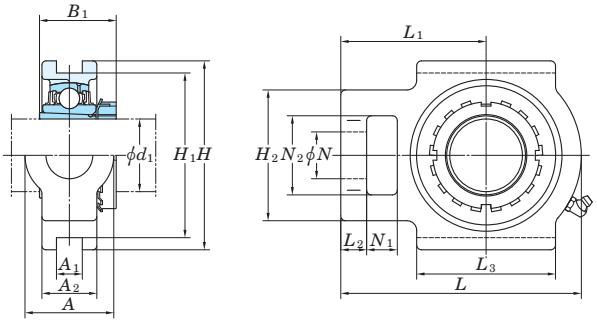

Shaft Dia. mm	Shaft Dia. inch	Dimensions inch / mm														Standard		
d_1		A	A_1	A_2	H	H_1	H_2	L	L_1	L_2	L_3	N	N_1	N_2	B_1 1)	Unit No.	Housing No.	Bearing No.
20	3/4	1 1/4 32	15/32 12	15/16 24	3 1/2 89	2 63/64 76	2 51	3 13/16 97	2 7/16 62	13/32 10	2 51	3/4 19	5/8 16	1 1/4 32	1 5/32(1 3/8) 29(35)	**UKT205**	T205	UK205
	3/4	1 15/32 37	15/32 12	1 3/32 28	4 1/32 102	3 1/2 89	2 7/32 56	4 7/16 113	2 3/4 70	13/32 10	2 1/4 57	7/8 22	5/8 16	1 15/32 37	1 3/8 35	**UKTX05**	TX05	UKX05
	3/4	1 13/32 36	15/32 12	1 1/32 26	3 1/2 89	3 5/32 80	2 7/16 62	4 13/16 122	3 76	15/32 12	2 9/16 65	1 1/32 26	5/8 16	1 13/32 36	1 3/8 35	**UKT305**	T305	UK305
25	1	1 15/32 37	15/32 12	1 3/32 28	4 1/32 102	3 1/2 89	2 7/32 56	4 7/16 113	2 3/4 70	13/32 10	2 1/4 57	7/8 22	5/8 16	1 15/32 37	1 7/32(1 1/2) 31(38)	**UKT206**	T206	UK206
	1	1 15/32 37	15/32 12	1 3/16 30	4 1/32 102	3 1/2 89	2 17/32 64	5 3/32 129	3 1/16 78	1/2 13	2 17/32 64	7/8 22	5/8 16	1 15/32 37	1 1/2 38	**UKTX06**	TX06	UKX06
	1	1 5/8 41	5/8 16	1 3/32 28	3 15/16 100	3 35/64 90	2 3/4 70	5 13/32 137	3 11/32 85	9/16 14	2 29/32 74	1 3/32 28	23/32 18	1 5/8 41	1 1/2 38	**UKT306**	T306	UK306
30	1 1/8	1 15/32 37	15/32 12	1 3/16 30	4 1/32 102	3 1/2 89	2 17/32 64	5 3/32 129	3 1/16 78	1/2 13	2 17/32 64	7/8 22	5/8 16	1 15/32 37	1 3/8(1 11/16) 35(43)	**UKT207**	T207	UK207
	1 1/8	1 15/16 49	5/8 16	1 13/32 36	4 1/2 114	4 1/64 102	3 9/32 83	5 21/32 144	3 15/32 88	19/32 15	3 9/32 83	1 5/32 29	3/4 19	1 15/16 49	1 11/16 43	**UKTX07**	TX07	UKX07
	1 1/8	1 25/32 45	5/8 16	1 1/4 32	4 3/8 111	3 15/16 100	2 15/16 75	5 29/32 150	3 11/16 94	19/32 15	3 5/32 80	1 3/16 30	25/32 20	1 25/32 45	1 11/16 43	**UKT307**	T307	UK307
35	1 1/4 1 3/8	1 15/16 49	5/8 16	1 5/16 33	4 1/2 114	4 1/64 102	3 9/32 83	5 21/32 144	3 15/32 88	5/8 16	3 9/32 83	1 5/32 29	3/4 19	1 15/16 49	1 13/32(1 13/16) 36(46)	**UKT208**	T208	UK208
	1 1/4 1 3/8	1 15/16 49	5/8 16	1 13/32 36	4 19/32 117	4 1/64 102	3 9/32 83	5 21/32 144	3 7/16 87	19/32 15	3 9/32 83	1 5/32 29	3/4 19	1 15/16 49	1 13/16 46	**UKTX08**	TX08	UKX08
	1 1/4 1 3/8	1 31/32 50	45/64 18	1 11/32 34	4 7/8 124	4 13/32 112	3 9/32 83	6 3/8 162	3 15/16 100	21/32 17	3 1/2 89	1 1/4 32	7/8 22	1 31/32 50	1 13/16 46	**UKT308**	T308	UK308
40	1 1/2 1 5/8	1 15/16 49	5/8 16	1 3/8 35	4 19/32 117	4 1/64 102	3 9/32 83	5 21/32 144	3 7/16 87	5/8 16	3 9/32 83	1 5/32 29	3/4 19	1 15/16 49	1 17/32(1 31/32) 39(50)	**UKT209**	T209	UK209
	1 1/2 1 5/8	1 15/16 49	5/8 16	1 1/2 38	4 19/32 117	4 1/64 102	3 9/32 83	5 7/8 149	3 17/32 90	5/8 16	3 3/8 86	1 5/32 29	3/4 19	1 15/16 49	1 31/32 50	**UKTX09**	TX09	UKX09
	1 1/2 1 5/8	2 5/32 55	45/64 18	1 1/2 38	5 7/16 138	4 59/64 125	3 17/32 90	7 178	4 11/32 110	23/32 18	3 13/16 97	1 11/32 34	15/16 24	2 5/32 55	1 31/32 50	**UKT309**	T309	UK309
45	1 3/4	1 15/16 49	5/8 16	1 15/32 37	4 19/32 117	4 1/64 102	3 9/32 83	5 7/8 149	3 17/32 90	5/8 16	3 3/8 86	1 5/32 29	3/4 19	1 15/16 49	1 21/32(2 5/32) 42(55)	**UKT210**	T210	UK210
	1 3/4	2 17/32 64	55/64 22	1 21/32 42	5 3/4 146	5 1/8 130	4 1/32 102	6 23/32 171	4 3/16 106	3/4 19	3 3/4 95	1 3/8 35	31/32 25	2 17/32 64	2 5/32 55	**UKTX10**	TX10	UKX10
	1 3/4	2 13/32 61	25/32 20	1 9/16 40	5 15/16 151	5 33/64 140	3 27/32 98	7 17/32 191	4 19/32 117	25/32 20	4 3/16 106	1 15/32 37	1 1/16 27	2 13/32 61	2 5/32 55	**UKT310**	T310	UK310
50	1 7/8 2	2 17/32 64	55/64 22	1 1/2 38	5 3/4 146	5 1/8 130	4 1/32 102	6 23/32 171	4 3/16 106	3/4 19	3 3/4 95	1 3/8 35	31/32 25	2 17/32 64	1 25/32(2 5/16) 45(59)	**UKT211**	T211	UK211

Note 1) Codes shown in parentheses indicate the dimensions and Part No. of applicable adapter (H2300X series) for UK200L3 series (triple-lip seal type).

Remarks 1. In Part No. of unit and units with covers, fitting codes follow bore diameter numbers. (See **Table 10.5** in P.51.)

2. Part No. of applicable grease nipples are shown below.
B-1/4-28UNF.....205~210, X05~X09, 305~308
B-PT1/8.....211~217, X10~X17, 309~328

With Pressed Steel Covers

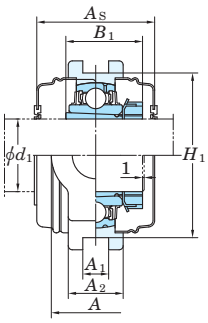

With Cast Iron Covers

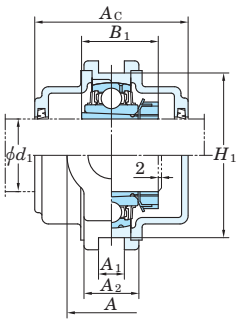

Variations of tolerance of groove width (Δ_{A1s}), variations of tolerance of distance between both grooves (Δ_{H1s}), and tolerance of symmetry of both groove sides (X)

Unit : mm

Housing No.			Δ_{A1s}	Δ_{H1s}	X
T205~T210	TX05~TX10	T305~T310	+0.2 0	0 −0.5	0.5
T211~T217	TX11~TX17	T311~T318	+0.3 0	0 −0.8	0.6
		T319~T322			0.7
		T324~T328			0.8

Form and dimension of L_c of T205JE3 (housing with cast iron covers) are shown below.

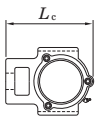

T205JE3 L_c = 102 mm

Adapter[1)] assembly No.	Mass	Basic Load Ratings kN		Factor	With Pressed Steel Covers					With Cast Iron Covers				
					Unit No.		Dimension mm	inch	Mass	Unit No.		Dimension mm	inch	Mass
	kg	C_r	C_{0r}	f_0	Open Ends Type	Closed End Type	A_s		kg	Open Ends Type	Closed End Type	A_c		kg
HE305X(HE2305X)	0.88	14.0	7.85	13.9	–	–	–	–	–	–	–	–	–	–
H305X(H2305X)	0.88				UKT205C	UKT205CD	48	1 7/8	0.88	UKT205FC	UKT205FCD	66	2 19/32	1.3
HE2305X	1.3	19.5	11.3	13.9	–	–	–	–	–	–	–	–	–	–
H2305X	1.3				UKTX05C	UKTX05CD	52	2 1/16	1.3	–	–	–	–	–
HE2305X	1.5	21.2	10.9	12.6	–	–	–	–	–	–	–	–	–	–
H2305X	1.5				–	–	–	–	–	UKT305C	UKT305CD	76	3	2.1
H306X(H2306X)	1.3	19.5	11.3	13.9	UKT206C	UKT206CD	52	2 1/16	1.3	UKT206FC	UKT206FCD	70	2 3/4	1.8
HE306X(HE2306X)	1.3				–	–	–	–	–	–	–	–	–	–
H2306X	1.7	25.7	15.4	13.9	UKTX06C	UKTX06CD	59	2 5/16	1.7	–	–	–	–	–
HE2306X	1.7				–	–	–	–	–	–	–	–	–	–
H2306X	1.9	26.7	15.0	13.3	–	–	–	–	–	UKT306C	UKT306CD	82	3 7/32	2.5
HE2306X	1.9				–	–	–	–	–	–	–	–	–	–
HS307X(HS2307X)	1.7	25.7	15.4	13.9	–	–	–	–	–	–	–	–	–	–
H307X(H2307X)	1.7				UKT207C	UKT207CD	59	2 5/16	1.7	UKT207FC	UKT207FCD	78	3 1/16	2.5
HS2307X	2.6	29.1	17.8	14.0	–	–	–	–	–	–	–	–	–	–
H2307X	2.6				UKTX07C	UKTX07CD	68	2 11/16	2.6	–	–	–	–	–
HS2307X	2.4	33.4	19.3	13.2	–	–	–	–	–	–	–	–	–	–
H2307X	2.4				–	–	–	–	–	UKT307C	UKT307CD	88	3 15/32	3.3
HE308X(HE2308X)	2.5	29.1	17.8	14.0	–	–	–	–	–	–	–	–	–	–
HS308X(HS2308X)	2.5				–	–	–	–	–	–	–	–	–	–
H308X(H2308X)	2.5				UKT208C	UKT208CD	68	2 11/16	2.5	UKT208FC	UKT208FCD	86	3 3/8	3.4
HE2308X	2.6	34.1	21.3	14.0	–	–	–	–	–	–	–	–	–	–
HS2308X	2.6				–	–	–	–	–	–	–	–	–	–
H2308X	2.6				UKTX08C	UKTX08CD	68	2 11/16	2.6	–	–	–	–	–
HE2308X	3.0	40.7	24.0	13.2	–	–	–	–	–	–	–	–	–	–
HS2308X	3.0				–	–	–	–	–	–	–	–	–	–
H2308X	3.0				–	–	–	–	–	UKT308C	UKT308CD	96	3 25/32	4.0
HE309X(HE2309X)	2.5	34.1	21.3	14.0	–	–	–	–	–	–	–	–	–	–
H309X(H2309X)	2.5				UKT209C	UKT209CD	68	2 11/16	2.5	UKT209FC	UKT209FCD	88	3 15/32	3.4
HS309X(HS2309X)	2.5				–	–	–	–	–	–	–	–	–	–
HE2309X	2.9	35.1	23.3	14.4	–	–	–	–	–	–	–	–	–	–
H2309X	2.9				UKTX09C	UKTX09CD	73	2 7/8	2.9	–	–	–	–	–
HS2309X	2.9				–	–	–	–	–	–	–	–	–	–
HE2309X	4.2	48.9	29.5	13.3	–	–	–	–	–	–	–	–	–	–
H2309X	4.2				–	–	–	–	–	UKT309C	UKT309CD	102	4 1/32	5.5
HS2309X	4.2				–	–	–	–	–	–	–	–	–	–
HE310X(HE2310X)	2.7	35.1	23.3	14.4	–	–	–	–	–	–	–	–	–	–
H310X(H2310X)	2.7				UKT210C	UKT210CD	73	2 7/8	2.7	UKT210FC	UKT210FCD	97	3 13/16	3.8
HE2310X	4.4	43.4	29.4	14.4	–	–	–	–	–	–	–	–	–	–
H2310X	4.4				UKTX10C	UKTX10CD	75	2 15/16	4.4	–	–	–	–	–
HE2310X	5.0	62.0	38.3	13.2	–	–	–	–	–	–	–	–	–	–
H2310X	5.0				–	–	–	–	–	UKT310C	UKT310CD	110	4 11/32	6.7
HS311X(HS2311X)	4.1	43.4	29.4	14.4	–	–	–	–	–	–	–	–	–	–
H311X(H2311X)	4.1				UKT211C	UKT211CD	75	2 15/16	4.1	UKT211FC	UKT211FCD	99	3 29/32	5.4
HE311X(HE2311X)	4.1				–	–	–	–	–	–	–	–	–	–

3. In Part No. of unit with adapters and bearing with adapters, Part No. of applicable adapter follow the Part No. shown in the dimensional tables. (Example of Part No. : UKT206J + H306X, UK206 + H306X)
4. As for the triple-lip seal type product (205 is the double-lip seal type product), supplementary code L3 (or L2) follows the Part No. of unit or bearing. (Example of Part No. : UKT206JL3 + H2306X, UK206L3 + H2306X)
5. For the dimensions and forms of applicable bearings and adapters, see the dimensional tables of ball bearing for unit and adapter assemblies.

UKT
Tapered bore (with adapter)
d_1 (50) ~ 100 mm

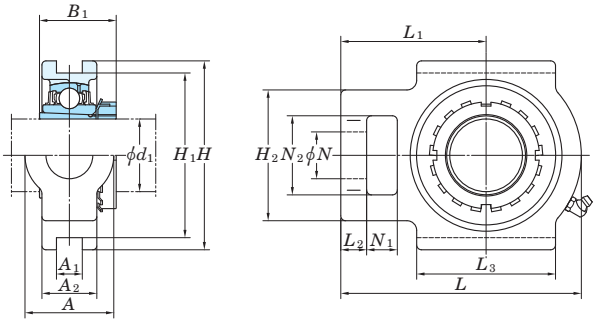

Shaft Dia. mm	Shaft Dia. inch	Dimensions inch / mm														Standard		
d_1		A	A_1	A_2	H	H_1	H_2	L	L_1	L_2	L_3	N	N_1	N_2	B_1 1)	Unit No.	Housing No.	Bearing No.
50	1 7/8	2 17/32	55/64	1 23/32	5 3/4	5 1/8	4 1/32	7 5/8	4 11/16	3/4	4 1/32	1 3/8	1 1/4	2 17/32	2 5/16	UKTX11	TX11	UKX11
		64	22	44	146	130	102	194	119	19	102	35	32	64	59			
	2																	
	1 7/8	2 19/32	55/64	1 23/32	6 13/32	5 29/32	4 1/8	8 5/32	5	13/16	4 17/32	1 17/32	1 5/32	2 19/32	2 5/16	UKT311	T311	UK311
		66	22	44	163	150	105	207	127	21	115	39	29	66	59			
	2																	
55	2 1/8	2 17/32	55/64	1 21/32	5 3/4	5 1/8	4 1/32	7 5/8	4 11/16	3/4	4 1/32	1 3/8	1 1/4	2 17/32	1 27/32(2 7/16)	UKT212	T212	UK212
		64	22	42	146	130	102	194	119	19	102	35	32	64	47(62)			
	2 1/8	2 3/4	1 1/32	1 7/8	6 9/16	5 15/16	4 3/8	8 13/16	5 13/32	13/16	4 3/4	1 5/8	1 1/4	2 3/4	2 7/16	UKTX12	TX12	UKX12
		70	26	48	167	151	111	224	137	21	121	41	32	70	62			
	2 1/8	2 25/32	55/64	1 13/16	7	6 19/64	4 7/16	8 21/32	5 5/16	29/32	4 27/32	1 5/8	1 7/32	2 25/32	2 7/16	UKT312	T312	UK312
		71	22	46	178	160	113	220	135	23	123	41	31	71	62			
60	2 1/4	2 3/4	1 1/32	1 23/32	6 9/16	5 15/16	4 3/8	8 13/16	5 13/32	13/16	4 3/4	1 5/8	1 1/4	2 3/4	1 31/32(2 9/16)	UKT213	T213	UK213
		70	26	44	167	151	111	224	137	21	121	41	32	70	50(65)			
	2 3/8																	
	2 1/4	2 3/4	1 1/32	1 7/8	6 9/16	5 15/16	4 3/8	8 13/16	5 13/32	13/16	4 3/4	1 5/8	1 1/4	2 3/4	2 9/16	UKTX13	TX13	UKX13
		70	26	48	167	151	111	224	137	21	121	41	32	70	65			
	2 3/8																	
	2 1/4	3 5/32	1 1/32	1 31/32	7 15/32	6 11/16	4 9/16	9 3/8	5 3/4	31/32	5 9/32	1 11/16	1 1/4	2 3/4	2 9/16	UKT313	T313	UK313
		80	26	50	190	170	116	238	146	25	134	43	32	70	65			
	2 3/8																	
65	2 1/2	2 3/4	1 1/32	1 13/16	6 9/16	5 15/16	4 3/8	8 13/16	5 13/32	13/16	4 3/4	1 5/8	1 1/4	2 3/4	2 5/32(2 7/8)	UKT215	T215	UK215
		70	26	48	167	151	111	232	140	21	121	41	32	70	55(73)			
	2 1/2	2 3/4	1 7/64	1 7/8	7 1/4	6 1/2	4 3/8	9 1/4	5 1/2	13/16	4 3/4	1 5/8	1 1/4	2 3/4	2 7/8	UKTX15	TX15	UKX15
		70	28	48	184	165	111	235	140	21	121	41	32	70	73			
	2 1/2	3 17/32	1 1/32	2 5/32	8 1/2	7 9/16	5 3/16	10 5/16	6 5/16	31/32	5 29/32	1 13/16	1 13/32	3 11/32	2 7/8	UKT315	T315	UK315
		90	26	55	216	192	132	262	160	25	150	46	36	85	73			
70	2 3/4	2 3/4	1 1/32	2	7 1/4	6 1/2	4 3/8	9 1/4	5 1/2	13/16	4 3/4	1 5/8	1 1/4	2 3/4	2 5/16(3 1/16)	UKT216	T216	UK216
		70	26	51	184	165	111	235	140	21	121	41	32	70	59(78)			
	2 3/4	2 7/8	1 7/64	2 1/8	7 25/32	6 13/16	4 7/8	10 1/4	6 3/8	1 3/32	6 3/16	1 7/8	1 1/2	2 7/8	3 1/16	UKTX16	TX16	UKX16
		73	28	54	198	173	124	260	162	28	157	48	38	73	78			
	2 3/4	4 1/32	1 3/16	2 3/8	9 1/16	8 1/32	5 29/32	11 3/32	6 27/32	1 3/32	6 5/16	2 3/32	1 21/32	3 27/32	3 1/16	UKT316	T316	UK316
		102	30	60	230	204	150	282	174	28	160	53	42	98	78			
75	3	2 7/8	1 3/16	2 1/8	7 25/32	6 13/16	4 7/8	10 1/4	6 3/8	1 5/32	6 3/16	1 7/8	1 1/2	2 7/8	2 15/32(3 7/32)	UKT217	T217	UK217
		73	30	54	198	173	124	260	162	29	157	48	38	73	63(82)			
	3	2 7/8	1 7/64	2 1/8	7 25/32	6 13/16	4 7/8	10 1/4	6 3/8	1 3/32	6 3/16	1 7/8	1 1/2	2 7/8	3 7/32	UKTX17	TX17	UKX17
		73	28	54	198	173	124	260	162	28	157	48	38	73	82			
	3	4 1/32	1 17/64	2 17/32	9 7/16	8 27/64	5 31/32	11 23/32	7 7/32	1 3/16	6 11/16	2 3/32	1 21/32	3 27/32	3 7/32	UKT317	T317	UK317
		102	32	64	240	214	152	298	183	30	170	53	42	98	82			
80	–	4 11/32	1 17/64	2 19/32	10 1/32	8 31/32	6 5/16	12 9/32	7 9/16	1 3/16	6 7/8	2 1/4	1 13/16	4 3/16	3 3/8	UKT318	T318	UK318
		110	32	66	255	228	160	312	192	30	175	57	46	106	86			
85	3 1/4	4 11/32	1 3/8	2 27/32	10 5/8	9 29/64	6 1/2	12 11/16	7 3/4	1 7/32	7 3/32	2 1/4	1 13/16	4 3/16	3 17/32	UKT319	T319	UK319
		110	35	72	270	240	165	322	197	31	180	57	46	106	90			
90	3 1/2	4 23/32	1 3/8	2 15/16	11 13/32	10 15/64	6 7/8	13 19/32	8 9/32	1 1/4	7 7/8	2 5/16	1 7/8	4 17/32	3 13/16	UKT320	T320	UK320
		120	35	75	290	260	175	345	210	32	200	59	48	115	97			
100	4	5 1/8	1 1/2	3 5/32	12 19/32	11 7/32	7 9/32	15 5/32	9 1/4	1 1/2	8 15/32	2 9/16	2 1/16	4 29/32	4 1/8	UKT322	T322	UK322
		130	38	80	320	285	185	385	235	38	215	65	52	125	105			

Note 1) Codes shown in parentheses indicate the dimensions and Part No. of applicable adapter (H2300X series) for UK200L3 series (triple-lip seal type).

Remarks 1. In Part No. of unit and units with covers, fitting codes follow bore diameter numbers. (See **Table 10.5** in P.51.)

2. Part No. of applicable grease nipples are shown below.
B-1/4-28UNF.....205~210, X05~X09, 305~308
B-PT1/8.....211~217, X10~X17, 309~328

With Pressed Steel Covers

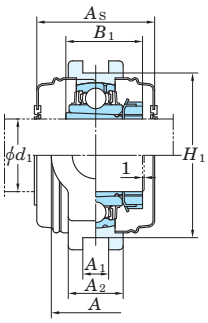

With Cast Iron Covers

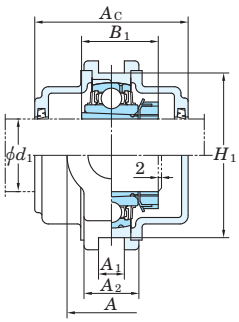

Variations of tolerance of groove width (Δ_{A1s}), variations of tolerance of distance between both grooves (Δ_{H1s}), and tolerance of symmetry of both groove sides (X)

Unit : mm

Housing No.			Δ_{A1s}	Δ_{H1s}	X
T205~T210	TX05~TX10	T305~T310	+0.2 / 0	0 / −0.5	0.5
T211~T217	TX11~TX17	T311~T318	+0.3 / 0	0 / −0.8	0.6
		T319~T322			0.7
		T324~T328			0.8

Form and dimension of L_c of T205JE3 (housing with cast iron covers) are shown below.

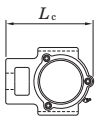

T205JE3 L_c = 102 mm

Adapter[1] assembly No.	Mass kg	Basic Load Ratings kN C_r	C_{0r}	Factor f_0	With Pressed Steel Covers: Unit No. Open Ends Type	Closed End Type	Dimension mm A_s	inch	Mass kg	With Cast Iron Covers: Unit No. Open Ends Type	Closed End Type	Dimension mm A_c	inch	Mass kg
HS2311X	5.1				–	–	–	–	–	–	–	–	–	–
H2311X	5.1	52.4	36.2	14.4	UKTX11C	UKTX11CD	88	3 15/32	5.1	–	–	–	–	–
HE2311X	5.1				–	–	–	–	–	–	–	–	–	–
HS2311X	6.4				–	–	–	–	–	–	–	–	–	–
H2311X	6.4	71.6	45.0	13.2	–	–	–	–	–	UKT311C	UKT311CD	114	4 1/2	8.3
HE2311X	6.4				–	–	–	–	–	–	–	–	–	–
HS312X(HS2312X)	4.8	52.4	36.2	14.4	–	–	–	–	–	–	–	–	–	–
H312X(H2313X)	4.8				UKT212C	UKT212CD	88	3 15/32	4.8	UKT212FC	UKT212FCD	114	4 1/2	6.3
HS2312X	7.3	57.2	40.1	14.4	–	–	–	–	–	–	–	–	–	–
H2312X	7.3				UKTX12C	UKTX12CD	88	3 15/32	7.3	–	–	–	–	–
HS2312X	7.5	81.9	52.2	13.2	–	–	–	–	–	–	–	–	–	–
H2312X	7.5				–	–	–	–	–	UKT312C	UKT312CD	124	4 7/8	9.9
HE313X(HE2313X)	6.8				–	–	–	–	–	–	–	–	–	–
H313X(H2313X)	6.8	57.2	40.1	14.4	UKT213C	UKT213CD	88	3 15/32	6.8	UKT213FC	UKT213FCD	114	4 1/2	8.5
HS313X(HS2313X)	6.8				–	–	–	–	–	–	–	–	–	–
HE2313X	7.2				–	–	–	–	–	–	–	–	–	–
H2313X	7.2	62.2	44.1	14.5	UKTX13C	UKTX13CD	98	3 27/32	7.2	–	–	–	–	–
HS2313X	7.2				–	–	–	–	–	–	–	–	–	–
HE2313X	9.4				–	–	–	–	–	–	–	–	–	–
H2313X	9.4	92.7	59.9	13.2	–	–	–	–	–	UKT313C	UKT313CD	122	4 13/16	11.6
HS2313X	9.4				–	–	–	–	–	–	–	–	–	–
HE315X(HE2315X)	7.4	67.4	48.3	14.5	–	–	–	–	–	–	–	–	–	–
H315X(H2315X)	7.4				UKT215C	UKT215CD	98	3 27/32	7.4	UKT215FC	UKT215FCD	124	4 7/8	9.4
HE2315X	8.4	72.7	53.0	14.6	–	–	–	–	–	–	–	–	–	–
H2315X	8.4				UKTX15C	UKTX15CD	108	4 1/4	8.4	–	–	–	–	–
HE2315X	13.1	113	77.2	13.2	–	–	–	–	–	–	–	–	–	–
H2315X	13.1				–	–	–	–	–	UKT315C	UKT315CD	134	5 9/32	15.9
HE316X(HE2316X)	8.5	72.7	53.0	14.6	–	–	–	–	–	–	–	–	–	–
H316X(H2316X)	8.5				UKT216C	UKT216CD	108	4 1/4	8.5	UKT216FC	UKT216FCD	138	5 7/16	11.0
HE2316X	11.8	84.0	61.9	14.5	–	–	–	–	–	–	–	–	–	–
H2316X	11.8				UKTX16C	UKTX16CD	112	4 13/32	11.8	–	–	–	–	–
HE2316X	16.3	123	86.7	13.3	–	–	–	–	–	–	–	–	–	–
H2316X	16.3				–	–	–	–	–	UKT316C	UKT316CD	138	5 7/16	19.4
H317X(H2317X)	11.2	84.0	61.9	14.5	UKT217C	UKT217CD	112	4 13/32	11.2	UKT217FC	UKT217FCD	142	5 19/32	14.0
HE317X(HE2317X)	11.2				–	–	–	–	–	–	–	–	–	–
H2317X	11.4	96.1	71.5	14.5	UKTX17C	UKTX17CD	122	4 13/16	11.4	–	–	–	–	–
HE2317X	11.4				–	–	–	–	–	–	–	–	–	–
H2317X	18.9	133	96.8	13.3	–	–	–	–	–	UKT317C	UKT317CD	146	5 3/4	22.4
HE2317X	18.9				–	–	–	–	–	–	–	–	–	–
H2318X	21.7	143	107	13.3	–	–	–	–	–	UKT318C	UKT318CD	150	5 29/32	25.9
HE2319X	25.2	153	119	13.3	–	–	–	–	–	–	–	–	–	–
H2319X	25.2				–	–	–	–	–	UKT319C	UKT319CD	162	6 3/8	29.9
HE2320X	30.4	173	141	13.2	–	–	–	–	–	–	–	–	–	–
H2320X	30.4				–	–	–	–	–	UKT320C	UKT320CD	174	6 27/32	36.6
H2322X	39.5	205	180	13.2	–	–	–	–	–	UKT322C	UKT322CD	188	7 13/32	46.4
HE2322X	39.5				–	–	–	–	–	–	–	–	–	–

3. In Part No. of unit with adapters and bearing with adapters, Part No. of applicable adapter follow the Part No. shown in the dimensional tables. (Example of Part No. : UKT206J + H306X, UK206 + H306X)
4. As for the triple-lip seal type product (205 is the double-lip seal type product), supplementary code L3 (or L2) follows the Part No. of unit or bearing. (Example of Part No. : UKT206JL3 + H2306X, UK206L3 + H2306X)
5. For the dimensions and forms of applicable bearings and adapters, see the dimensional tables of ball bearing for unit and adapter assemblies.

UKT
Tapered bore (with adapter)
d_1 110 ~ 125 mm

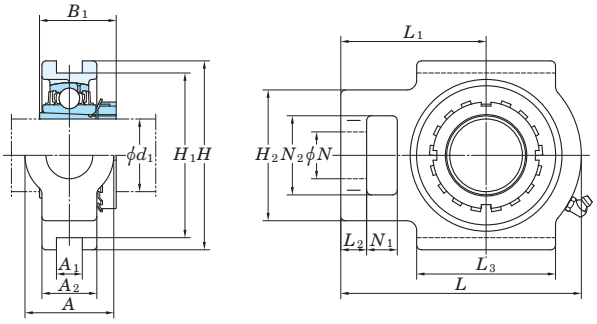

Shaft Dia. mm	Shaft Dia. inch	Dimensions inch / mm														Standard		
d_1		A	A_1	A_2	H	H_1	H_2	L	L_1	L_2	L_3	N	N_1	N_2	B_1 1)	Unit No.	Housing No.	Bearing No.
110	–	5 1/2	1 49/64	3 17/32	13 31/32	12 9/32	8 9/32	17	10 1/2	1 21/32	9 1/16	2 3/4	2 3/8	5 1/2	4 13/32	**UKT324**	T324	UK324
		140	45	90	355	320	210	432	267	42	230	70	60	140	112			
115	4 1/2	5 29/32	1 31/32	3 15/16	15 5/32	13 25/32	8 21/32	18 5/16	11 7/32	1 25/32	9 7/16	2 15/16	2 9/16	5 29/32	4 3/4	**UKT326**	T326	UK326
		150	50	100	385	350	220	465	285	45	240	75	65	150	121			
125	–	6 3/32	1 31/32	3 15/16	16 11/32	14 61/64	9 1/16	20 9/32	12 13/32	1 31/32	10 1/32	3 5/32	2 3/4	6 5/16	5 5/32	**UKT328**	T328	UK328
		155	50	100	415	380	230	515	315	50	255	80	70	160	131			

Note 1) Codes shown in parentheses indicate the dimensions and Part No. of applicable adapter (H2300X series) for UK200L3 series (triple-lip seal type).

Remarks 1. In Part No. of unit and units with covers, fitting codes follow bore diameter numbers. (See **Table 10.5** in P.51.)

2. Part No. of applicable grease nipples are shown below.
B-1/4-28UNF.....205~210, X05~X09, 305~308
B-PT1/8.....211~217, X10~X17, 309~328

With Pressed Steel Covers

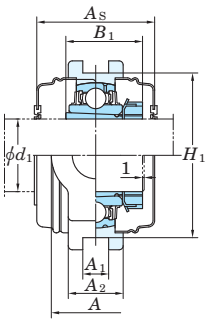

With Cast Iron Covers

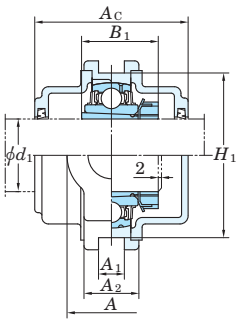

Variations of tolerance of groove width (Δ_{A1s}), variations of tolerance of distance between both grooves (Δ_{H1s}), and tolerance of symmetry of both groove sides (X)

Unit : mm

Housing No.			Δ_{A1s}	Δ_{H1s}	X
T205~T210	TX05~TX10	T305~T310	+0.2 0	0 −0.5	0.5
T211~T217	TX11~TX17	T311~T318	+0.3 0	0 −0.8	0.6
		T319~T322			0.7
		T324~T328			0.8

Form and dimension of L_c of T205JE3 (housing with cast iron covers) are shown below.

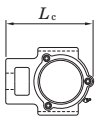

T205JE3 L_c = 102 mm

Adapter[1)] assembly No.	Mass kg	Basic Load Ratings kN C_r	C_{0r}	Factor f_0	With Pressed Steel Covers Unit No. Open Ends Type	Closed End Type	Dimension mm A_s	inch	Mass kg	With Cast Iron Covers Unit No. Open Ends Type	Closed End Type	Dimension mm A_c	inch	Mass kg
H2324	54.7	207	185	13.5	–	–	–	–	–	UKT324C	UKT324CD	196	7 23/32	65.0
HE2326	69.1	229	214	13.6	–	–	–	–	–	–	–	–	–	–
H2326	69.1				–	–	–	–	–	UKT326C	UKT326CD	214	8 7/16	82.4
H2328	85.1	253	246	13.6	–	–	–	–	–	UKT328C	UKT328CD	222	8 3/4	102

3. In Part No. of unit with adapters and bearing with adapters, Part No. of applicable adapter follow the Part No. shown in the dimensional tables. (Example of Part No. : UKT206J + H306X, UK206 + H306X)
4. As for the triple-lip seal type product (205 is the double-lip seal type product), supplementary code L3 (or L2) follows the Part No. of unit or bearing. (Example of Part No. : UKT206JL3 + H2306X, UK206L3 + H2306X)
5. For the dimensions and forms of applicable bearings and adapters, see the dimensional tables of ball bearing for unit and adapter assemblies.

UCST-H1S6
Cylindrical bore (with set screws)
d 20 ~ 50 mm

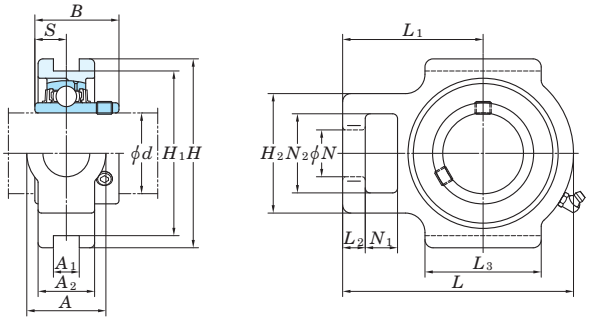

Shaft Dia. mm	Dimensions inch / mm															Standard Unit No.
d	A	A_1	A_2	H	H_1	H_2	L	L_1	L_2	L_3	N	N_1	N_2	B	S	
20	1 1/4	15/32	29/32	3 1/2	2 63/64	1 13/16	3 1/2	2 5/16	11/32	1 23/32	3/4	23/32	1 1/4	1.220	0.500	UCST204H1S6
	32	12	23	89	76	46	89	59	9	44	19	18	32	31	12.7	
25	1 1/4	15/32	31/32	3 1/2	2 63/64	1 13/16	3 21/32	2 3/8	11/32	1 23/32	3/4	23/32	1 1/4	1.343	0.563	UCST205H1S6
	32	12	25	89	76	46	93	60	9	44	19	18	32	34.1	14.3	
30	1 15/32	15/32	1 1/16	4 1/32	3 1/2	2 1/16	4 3/16	2 5/8	11/32	1 31/32	7/8	23/32	1 15/32	1.500	0.626	UCST206H1S6
	37	12	27	102	89	52	106	67	9	50	22	18	37	38.1	15.9	
35	1 15/32	15/32	1 7/32	4 1/32	3 1/2	2 7/32	4 11/16	2 15/16	7/16	2 7/32	7/8	23/32	1 15/32	1.689	0.689	UCST207H1S6
	37	12	31	102	89	56	119	75	11	56	22	18	37	42.9	17.5	
40	1 15/16	5/8	1 1/4	4 1/2	4 1/64	2 29/32	5 5/16	3 11/32	9/16	2 17/32	1 5/32	25/32	1 15/16	1.937	0.748	UCST208H1S6
	49	16	32	114	102	74	135	85	14	64	29	20	49	49.2	19	
45	1 15/16	5/8	1 11/32	4 19/32	4 1/64	2 29/32	5 13/32	3 11/32	9/16	2 19/32	1 5/32	25/32	1 15/16	1.937	0.748	UCST209H1S6
	49	16	34	117	102	74	137	85	14	66	29	20	49	49.2	19	
50	1 15/16	5/8	1 3/8	4 19/32	4 1/64	2 29/32	5 5/8	3 7/16	9/16	2 27/32	1 5/32	25/32	1 15/16	2.031	0.748	UCST210H1S6
	49	16	35	117	102	74	143	87	14	72	29	20	49	51.6	19	

Remarks 1. In Part No. of unit and units with covers, fitting codes follow bore diameter codes. (See **Table 10.5** in P.51.)
2. Part No. of the applicable grease nipple is A-1/4-28UNFN12.
3. For the dimensions and forms of applicable bearings, see the dimensional tables of ball bearing for unit.

With Pressed Stainless Steel Covers

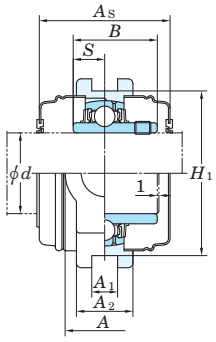

Variations of tolerance of groove width (Δ_{A1s}), variations of tolerance of distance between both grooves (Δ_{H1s}), and tolerance of symmetry of both groove sides (X)

Unit : mm

Housing No.	Δ_{A1s}	Δ_{H1s}	X
ST204H1~ST210H1	+0.2 0	0 −0.5	0.5

Housing No.	Bearing No.	Mass	Basic Load Ratings kN		Factor	With Pressed Stainless Steel Covers Unit No.		Dimension mm	inch	Mass
		kg	C_r	C_{0r}	f_0	Open Ends Type	Closed End Type	A_s		kg
ST204H1	UC204S6	0.73	10.9	5.35	13.2	UCST204H1CS6	UCST204H1CDS6	45	1 25/32	0.73
ST205H1	UC205S6	0.79	11.9	6.3	13.9	UCST205H1CS6	UCST205H1CDS6	49	1 15/16	0.79
ST206H1	UC206S6	1.1	16.5	9.05	13.9	UCST206H1CS6	UCST206H1CDS6	53	2 3/32	1.1
ST207H1	UC207S6	1.5	21.8	12.3	13.9	UCST207H1CS6	UCST207H1CDS6	60	2 3/8	1.5
ST208H1	UC208S6	2	24.8	14.3	14.0	UCST208H1CS6	UCST208H1CDS6	69	2 23/32	2
ST209H1	UC209S6	2.1	27.8	16.2	14.0	UCST209H1CS6	UCST209H1CDS6	69	2 23/32	2.1
ST210H1	UC210S6	2.3	29.8	18.6	14.4	UCST210H1CS6	UCST210H1CDS6	74	2 29/32	2.3

UCTH
Cylindrical bore (with set screws)
d 12 ~ 65 mm

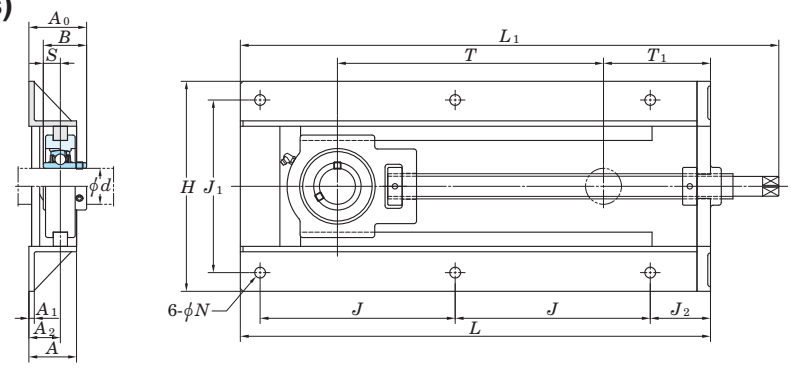

Shaft Dia. mm	Shaft Dia. inch	Dimensions inch / mm															Bolt Size inch / mm	Standard Unit No.
d		H	L	L_1	A	J	J_1	J_2	N	T	T_1	A_1	A_2	A_0	B	S		
12																		UCTH201-150
	1/2																	UCTH201-8-150
15		7 7/8	12 17/32	14 13/16	1 31/32	4 39/64	6 1/16	2 9/16	15/32	5 1/32	3 15/32	1/4	1 7/64	1 13/16	1.220	0.500	3/8	UCTH202-150
	5/8	200	318	376	50	117	154	65	12	153	88	6	28	46.3	31	12.7	M10	UCTH202-10-150
17																		UCTH203-150
	3/4																	UCTH204-12-150
20																		UCTH204-150
	7/8																	UCTH205-14-150
25	15/16	7 7/8	12 17/32	14 27/32	1 31/32	4 39/64	6 1/16	2 9/16	15/32	5 31/32	3 15/32	1/4	1 7/64	1 7/8	1.343	0.563	3/8	UCTH205-15-150
		200	318	377	50	117	154	65	12	152	88	6	28	47.8	34.1	14.3	M10	UCTH205-150
	1																	UCTH205-16-150
	1 1/8																	UCTH206-18-150
30		8 3/8	13 7/32	16 1/32	1 31/32	4 31/32	6 17/32	2 9/16	15/32	5 5/8	3 15/16	1/4	1 17/64	2 1/8	1.500	0.626	3/8	UCTH206-150
	1 3/16	213	336	407	50	126	166	65	12	143	100	6	32	54.2	38.1	15.9	M10	UCTH206-19-150
	1 1/4																	UCTH206-20-150
	1 1/4																	UCTH207-20-230
	1 5/16																	UCTH207-21-230
35	1 3/8	8 3/8	16 15/16	19 11/16	1 31/32	6 13/16	6 17/32	2 9/16	15/32	8 5/8	4 7/32	1/4	1 17/64	2 1/4	1.689	0.689	3/8	UCTH207-22-230
		213	430	500	50	173	166	65	12	219	107	6	32	57.4	42.9	17.5	M10	UCTH207-230
	1 7/16																	UCTH207-23-230
	1 1/2																	UCTH208-24-300
40	1 9/16	9 7/32	20 19/32	23 19/32	1 31/32	8 35/64	7 9/16	2 5/8	15/32	11 21/32	4 11/16	1/4	1 3/8	2 9/16	1.937	0.748	3/8	UCTH208-25-300
		234	523	599	50	217	192	67	12	296	119	6	35	65.2	49.2	19	M10	UCTH208-300
	1 5/8																	UCTH209-26-300
45	1 11/16	9 7/32	20 19/32	23 17/32	1 31/32	8 35/64	7 9/16	2 5/8	15/32	11 11/16	4 21/32	1/4	1 3/8	2 9/16	1.937	0.748	3/8	UCTH209-27-300
	1 3/4	234	523	598	50	217	192	67	12	297	118	6	35	65.2	49.2	19	M10	UCTH209-28-300
																		UCTH209-300
	1 7/8																	UCTH210-30-300
50	1 15/16	9 7/32	20 3/4	23 3/4	1 31/32	8 5/8	7 9/16	2 5/8	19/32	11 21/32	4 3/4	1/4	1 3/8	2 21/32	2.031	0.748	7/16	UCTH210-31-300
		234	527	603	50	219	192	67	15	296	121	6	35	67.6	51.6	19	M12	UCTH210-300
	2																	UCTH210-32-300
	2																	UCTH211-32-300
55	2 1/8	11 31/32	21 15/32	24 3/4	2 9/16	9 1/16	9 7/16	2 15/32	19/32	11 15/32	5 9/16	1/4	1 1/2	2 13/16	2.189	0.874	7/16	UCTH211-34-300
		304	545	629	65	230	240	63	15	291	141	6	38	71.4	55.6	22.2	M12	UCTH211-300
	2 3/16																	UCTH211-35-300
	2 1/4																	UCTH212-36-300
60		11 31/32	22 15/32	25 5/8	2 9/16	9 9/16	9 7/16	2 15/32	19/32	11 11/32	6 1/16	1/4	1 1/2	3 1/16	2.563	1.000	7/16	UCTH212-300
	2 3/8	304	571	651	65	243	240	63	15	288	154	6	38	77.7	65.1	25.4	M12	UCTH212-38-300
	2 7/16																	UCTH212-39-300
65	2 1/2	13 1/16	23 31/32	28 1/16	2 9/16	10 15/64	10 15/64	2 5/8	19/32	11 13/16	7	1/4	1 11/16	3 1/4	2.563	1.000	7/16	UCTH213-40-300
		332	609	713	65	260	260	67	15	300	178	6	43	82.7	65.1	25.4	M12	UCTH213-300

Remarks 1. In Part No. of unit and units with covers, fitting codes follow bore diameter numbers. (See **Table 10.5** in P.51.)
2. Part No. of applicable grease nipples are shown below.
B-1/4-28UNF ..... 201~210
B-PT1/8 ..... 211~213
3. As for the triple-lip seal type product (from 201 to 205 are the double-lip seal type products), supplementary code L3 (or L2) follows the Part No. of unit or bearing. (Example of Part No. : UCTH206JL3-150, UC206L3)

With Pressed Steel Covers

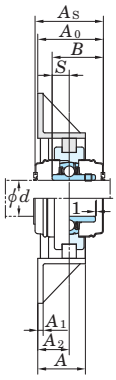

With Cast Iron Covers

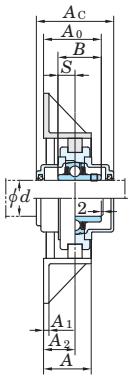

Variations of tolerance of distance between centers of bolt holes (Δ_{Js}, Δ_{J1s})

Unit : mm

Nominal unit code	Δ_{Js}	Δ_{J1s}
UCTH201~UCTH213	±0.5	±0.5

Bearing No.	Mass kg	Basic Load Ratings kN C_r	C_{0r}	Factor f_0	With Pressed Steel Covers Unit No. Open Ends Type	Closed End Type	Dimension mm A_s	inch	Mass kg	With Cast Iron Covers Unit No. Open Ends Type	Closed End Type	Dimension mm A_c	inch	Mass kg
UC201	6.7				UCTH201C-150	UCTH201CD-150	44	1 23/32	6.7	–	–	–	–	–
UC201-8	6.7				–	–	–	–	–	–	–	–	–	–
UC202	6.7				UCTH202C-150	UCTH202CD-150	44	1 23/32	6.7	–	–	–	–	–
UC202-10	6.7	12.8	6.65	13.2	–	–	–	–	–	–	–	–	–	–
UC203	6.7				UCTH203C-150	UCTH203CD-150	44	1 23/32	6.7	–	–	–	–	–
UC204-12	6.7				–	–	–	–	–	–	–	–	–	–
UC204	6.7				UCTH204C-150	UCTH204CD-150	44	1 23/32	6.7	UCTH204FC-150	UCTH204FCD-150	62	2 7/16	7.0
UC205-14	6.7				–	–	–	–	–	–	–	–	–	–
UC205-15	6.7	14.0	7.85	13.9	–	–	–	–	–	–	–	–	–	–
UC205	6.7				UCTH205C-150	UCTH205CD-150	48	1 7/8	6.7	UCTH205FC-150	UCTH205FCD-150	66	2 19/32	7.1
UC205-16	6.7				–	–	–	–	–	–	–	–	–	–
UC206-18	8.0				–	–	–	–	–	–	–	–	–	–
UC206	8.0	19.5	11.3	13.9	UCTH206C-150	UCTH206CD-150	52	2 1/16	8.0	UCTH206FC-150	UCTH206FCD-150	70	2 3/4	8.5
UC206-19	8.0				–	–	–	–	–	–	–	–	–	–
UC206-20	8.0				–	–	–	–	–	–	–	–	–	–
UC207-20	10.5				–	–	–	–	–	–	–	–	–	–
UC207-21	10.5				–	–	–	–	–	–	–	–	–	–
UC207-22	10.5	3	15.4	13.9	–	–	–	–	–	–	–	–	–	–
UC207	10.5				UCTH207C-230	UCTH207CD-230	59	2 5/16	10.5	UCTH207FC-230	UCTH207FCD-230	78	3 1/16	11.2
UC207-23	10.5				–	–	–	–	–	–	–	–	–	–
UC208-24	12.5				–	–	–	–	–	–	–	–	–	–
UC208-25	12.5	29.1	17.8	14.0	–	–	–	–	–	–	–	–	–	–
UC208	12.5				UCTH208C-300	UCTH208CD-300	68	2 11/16	12.5	UCTH208FC-300	UCTH208FCD-300	86	3 3/8	13.3
UC209-26	12.4				–	–	–	–	–	–	–	–	–	–
UC209-27	12.4	34.1	21.3	14.0	–	–	–	–	–	–	–	–	–	–
UC209-28	12.4				–	–	–	–	–	–	–	–	–	–
UC209	12.4				UCTH209C-300	UCTH209CD-300	68	2 11/16	12.4	UCTH209FC-300	UCTH209FCD-300	88	3 15/32	13.2
UC210-30	12.6				–	–	–	–	–	–	–	–	–	–
UC210-31	12.6	35.1	23.3	14.4	–	–	–	–	–	–	–	–	–	–
UC210	12.6				UCTH210C-300	UCTH210CD-300	73	2 7/8	12.6	UCTH210FC-300	UCTH210FCD-300	97	3 13/16	13.6
UC210-32	12.6				–	–	–	–	–	–	–	–	–	–
UC211-32	20.1				–	–	–	–	–	–	–	–	–	–
UC211-34	20.1	43.4	29.4	14.4	–	–	–	–	–	–	–	–	–	–
UC211	20.1				UCTH211C-300	UCTH211CD-300	75	2 15/16	20.1	UCTH211FC-300	UCTH211FCD-300	99	3 29/32	21.3
UC211-35	20.1				–	–	–	–	–	–	–	–	–	–
UC212-36	21.4				–	–	–	–	–	–	–	–	–	–
UC212	21.4	52.4	36.2	14.4	UCTH212C-300	UCTH212CD-300	88	3 15/32	21.4	UCTH212FC-300	UCTH212FCD-300	114	4 1/2	21.9
UC212-38	21.4				–	–	–	–	–	–	–	–	–	–
UC212-39	21.4				–	–	–	–	–	–	–	–	–	–
UC213-40	25.5	57.2	40.1	14.4	–	–	–	–	–	–	–	–	–	–
UC213	25.5				UCTH213C-300	UCTH213CD-300	88	3 15/32	25.5	UCTH213FC-300	UCTH213FCD-300	114	4 1/2	27.2

4. If heavy load ($P_r/C_r > 0.12$), vibration, or impact occurs, contact with JTEKT.
5. For the dimensions and forms of applicable bearings, see the dimensional tables of ball bearing for unit.
6. Tapered bore (with adapter) type products are also available.
(Example of Part No. : UKTH205J-150 + H305X, UK205 + H305X)

UCTL
Cylindrical bore (with set screws)
d 20 ~ 45 mm

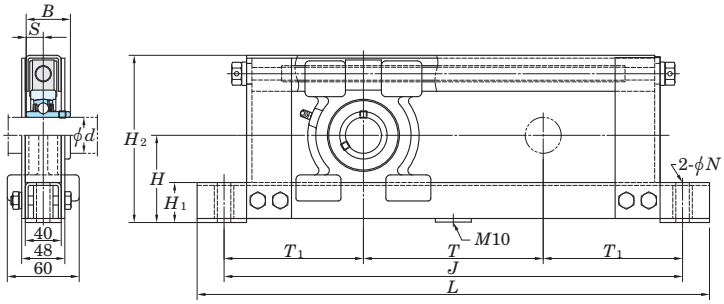

Shaft Dia. mm d	Dimensions mm H	H_1	H_2	L	J	N	T	T_1	B	S	Bolt Size mm	Standard Unit No.	Bearing No.	Mass kg
20	77	44	146	430	370	15	100	135	31	12.7	M12	**UCTL204-100**	UC204	6.0
	77	44	146	530	470	15	200	135	31	12.7	M12	**UCTL204-200**	UC204	7.0
	77	44	146	630	570	15	300	135	31	12.7	M12	**UCTL204-300**	UC204	7.5
	77	44	146	730	670	15	400	135	31	12.7	M12	**UCTL204-400**	UC204	8.0
25	82	44	156	440	380	15	100	140	34.1	14.3	M12	**UCTL205-100**	UC205	7.0
	82	44	156	540	480	15	200	140	34.1	14.3	M12	**UCTL205-200**	UC205	7.5
	82	44	156	640	580	15	300	140	34.1	14.3	M12	**UCTL205-300**	UC205	8.0
	82	44	156	740	680	15	400	140	34.1	14.3	M12	**UCTL205-400**	UC205	9.0
30	87	44	166	450	390	15	100	145	38.1	15.9	M12	**UCTL206-100**	UC206	7.0
	87	44	166	550	490	15	200	145	38.1	15.9	M12	**UCTL206-200**	UC206	8.0
	87	44	166	650	590	15	300	145	38.1	15.9	M12	**UCTL206-300**	UC206	9.0
	87	44	166	750	690	15	400	145	38.1	15.9	M12	**UCTL206-400**	UC206	9.5
35	92	44	176	460	400	15	100	150	42.9	17.5	M12	**UCTL207-100**	UC207	8.0
	92	44	176	560	500	15	200	150	42.9	17.5	M12	**UCTL207-200**	UC207	8.5
	92	44	176	660	600	15	300	150	42.9	17.5	M12	**UCTL207-300**	UC207	9.0
	92	44	176	760	700	15	400	150	42.9	17.5	M12	**UCTL207-400**	UC207	10
40	97	44	186	470	410	15	100	155	49.2	19	M12	**UCTL208-100**	UC208	8.5
	97	44	186	570	510	15	200	155	49.2	19	M12	**UCTL208-200**	UC208	9.0
	97	44	186	670	610	15	300	155	49.2	19	M12	**UCTL208-300**	UC208	10
	97	44	186	770	710	15	400	155	49.2	19	M12	**UCTL208-400**	UC208	10.5
45	100	44	192	480	420	15	100	160	49.2	19	M12	**UCTL209-100**	UC209	9.0
	100	44	192	580	520	15	200	160	49.2	19	M12	**UCTL209-200**	UC209	9.5
	100	44	192	680	620	15	300	160	49.2	19	M12	**UCTL209-300**	UC209	10.5
	100	44	192	780	720	15	400	160	49.2	19	M12	**UCTL209-400**	UC209	11

Remarks 1. In Part No. of unit and units with covers, fitting codes follow bore diameter codes. (See **Table 10.5** in P.51.)
2. Part No. of applicable grease nipples is C-1/4-28UNF.
3. As for the triple-lip seal type product (204 and 205 are the double-lip seal type products), supplementary code L3 (or L2) follows the Part No. of unit or bearing. (Example of Part No. : UCTL206JL3-100, UC206L3)
4. The unit should be mounted so that load is applied to the frame mounting surface vertically and downward.

With Pressed Steel Covers

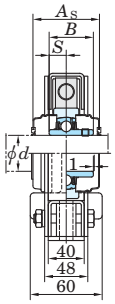

With Cast Iron Covers

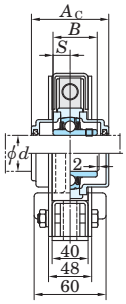

Variations of tolerance of distance from mounting bottom to center of spherical bore (Δ_{Hs}) and variations of tolerance of distance between centers of bolt holes (Δ_{Js})

Unit : mm

Nominal unit code	Δ_{Hs}	Δ_{Js}
UCTL204~207	±2	±0.5
UCTL208, 209		±0.8

Basic Load Ratings kN		Factor	With Pressed Steel Covers				With Cast Iron Covers			
			Unit No.		Dimension mm	Mass	Unit No.		Dimension mm	Mass
C_r	C_{0r}	f_0	Open Ends Type	Closed End Type	A_s	kg	Open Ends Type	Closed End Type	A_c	kg
12.8	6.65	13.2	UCTL204C-100	UCTL204CD-100	44	6.0	UCTL204FC-100	UCTL204FCD-100	62	6.5
12.8	6.65	13.2	UCTL204C-200	UCTL204CD-200	44	7.0	UCTL204FC-200	UCTL204FCD-200	62	7.5
12.8	6.65	13.2	UCTL204C-300	UCTL204CD-300	44	7.5	UCTL204FC-300	UCTL204FCD-300	62	8.0
12.8	6.65	13.2	UCTL204C-400	UCTL204CD-400	44	8.0	UCTL204FC-400	UCTL204FCD-400	62	8.5
14.0	7.85	13.9	UCTL205C-100	UCTL205CD-100	48	7.0	UCTL205FC-100	UCTL205FCD-100	66	7.5
14.0	7.85	13.9	UCTL205C-200	UCTL205CD-200	48	7.5	UCTL205FC-200	UCTL205FCD-200	66	8.0
14.0	7.85	13.9	UCTL205C-300	UCTL205CD-300	48	8.0	UCTL205FC-300	UCTL205FCD-300	66	8.5
14.0	7.85	13.9	UCTL205C-400	UCTL205CD-400	48	9.0	UCTL205FC-400	UCTL205FCD-400	66	9.5
19.5	11.3	13.9	UCTL206C-100	UCTL206CD-100	52	7.0	UCTL206FC-100	UCTL206FCD-100	70	7.5
19.5	11.3	13.9	UCTL206C-200	UCTL206CD-200	52	8.0	UCTL206FC-200	UCTL206FCD-200	70	8.5
19.5	11.3	13.9	UCTL206C-300	UCTL206CD-300	52	9.0	UCTL206FC-300	UCTL206FCD-300	70	9.5
19.5	11.3	13.9	UCTL206C-400	UCTL206CD-400	52	9.5	UCTL206FC-400	UCTL206FCD-400	70	10
25.7	15.4	13.9	UCTL207C-100	UCTL207CD-100	59	8.0	UCTL207FC-100	UCTL207FCD-100	78	9.0
25.7	15.4	13.9	UCTL207C-200	UCTL207CD-200	59	8.5	UCTL207FC-200	UCTL207FCD-200	78	9.5
25.7	15.4	13.9	UCTL207C-300	UCTL207CD-300	59	9.0	UCTL207FC-300	UCTL207FCD-300	78	10
25.7	15.4	13.9	UCTL207C-400	UCTL207CD-400	59	10	UCTL207FC-400	UCTL207FCD-400	78	11
29.1	17.8	14.0	UCTL208C-100	UCTL208CD-100	68	8.5	UCTL208FC-100	UCTL208FCD-100	86	9.5
29.1	17.8	14.0	UCTL208C-200	UCTL208CD-200	68	9.0	UCTL208FC-200	UCTL208FCD-200	86	10
29.1	17.8	14.0	UCTL208C-300	UCTL208CD-300	68	10	UCTL208FC-300	UCTL208FCD-300	86	11
29.1	17.8	14.0	UCTL208C-400	UCTL208CD-400	68	10.5	UCTL208FC-400	UCTL208FCD-400	86	11.5
34.1	21.3	14.0	UCTL209C-100	UCTL209CD-100	68	9.0	UCTL209FC-100	UCTL209FCD-100	88	10
34.1	21.3	14.0	UCTL209C-200	UCTL209CD-200	68	9.5	UCTL209FC-200	UCTL209FCD-200	88	10.5
34.1	21.3	14.0	UCTL209C-300	UCTL209CD-300	68	10.5	UCTL209FC-300	UCTL209FCD-300	88	11.5
34.1	21.3	14.0	UCTL209C-400	UCTL209CD-400	68	11	UCTL209FC-400	UCTL209FCD-400	88	12

5. If heavy load ($P_r/C_r > 0.12$), vibration, or impact occurs, contact with JTEKT.
6. Tapered bore (with adapter) type bearing units are also available. (Example of Part No. : UKTL206J-100 + H306X, UK206 + H306X)
7. If frame parts need to be corrosion resistant, contact with JTEKT.
8. For the dimensions and forms of applicable bearings, see the dimensional tables of ball bearing for unit.

UCTU
Cylindrical bore (with set screws)
d 40 ~ 80 mm

With Pressed Steel Covers With Cast Iron Covers

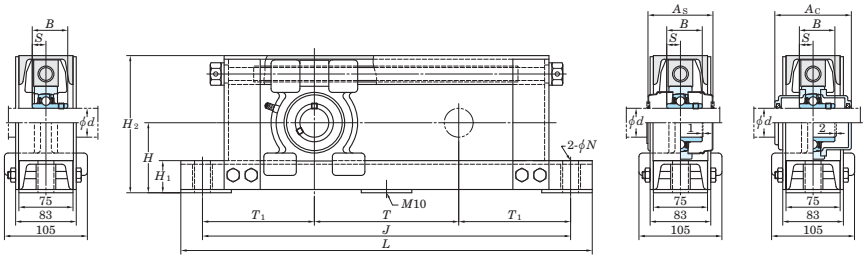

UCTU200

Shaft Dia. mm d	Dimensions mm H	H_1	H_2	L	J	N	T	T_1	B	S	Bolt Size mm	Standard Unit No.	Bearing No.	Mass kg
40	97	44	190	870	810	22	500	155	49.2	19	M18	**UCTU208-500**	UC208	21
	97	44	190	970	910	22	600	155	49.2	19	M18	**UCTU208-600**	UC208	22
	97	44	190	1 070	1 010	22	700	155	49.2	19	M18	**UCTU208-700**	UC208	24
	97	44	190	1 170	1 110	22	800	155	49.2	19	M18	**UCTU208-800**	UC208	26
	97	44	190	1 270	1 210	22	900	155	49.2	19	M18	**UCTU208-900**	UC208	28
45	102	44	200	880	820	22	500	160	49.2	19	M18	**UCTU209-500**	UC209	22
	102	44	200	980	920	22	600	160	49.2	19	M18	**UCTU209-600**	UC209	24
	102	44	200	1 080	1 020	22	700	160	49.2	19	M18	**UCTU209-700**	UC209	25
	102	44	200	1 180	1 120	22	800	160	49.2	19	M18	**UCTU209-800**	UC209	27
	102	44	200	1 280	1 220	22	900	160	49.2	19	M18	**UCTU209-900**	UC209	29
50	107	44	210	890	830	22	500	165	51.6	19	M18	**UCTU210-500**	UC210	23
	107	44	210	990	930	22	600	165	51.6	19	M18	**UCTU210-600**	UC210	25
	107	44	210	1 090	1 030	22	700	165	51.6	19	M18	**UCTU210-700**	UC210	27
	107	44	210	1 190	1 130	22	800	165	51.6	19	M18	**UCTU210-800**	UC210	28
	107	44	210	1 290	1 230	22	900	165	51.6	19	M18	**UCTU210-900**	UC210	30
55	115	44	230	910	850	22	500	175	55.6	22.2	M18	**UCTU211-500**	UC211	25
	115	44	230	1 010	950	22	600	175	55.6	22.2	M18	**UCTU211-600**	UC211	27
	115	44	230	1 110	1 050	22	700	175	55.6	22.2	M18	**UCTU211-700**	UC211	28
	115	44	230	1 210	1 150	22	800	175	55.6	22.2	M18	**UCTU211-800**	UC211	30
	115	44	230	1 310	1 250	22	900	175	55.6	22.2	M18	**UCTU211-900**	UC211	32
60	120	44	240	920	860	22	500	180	65.1	25.4	M18	**UCTU212-500**	UC212	26
	120	44	240	1 020	960	22	600	180	65.1	25.4	M18	**UCTU212-600**	UC212	28
	120	44	240	1 120	1 060	22	700	180	65.1	25.4	M18	**UCTU212-700**	UC212	30
	120	44	240	1 220	1 160	22	800	180	65.1	25.4	M18	**UCTU212-800**	UC212	31
	120	44	240	1 320	1 260	22	900	180	65.1	25.4	M18	**UCTU212-900**	UC212	33
65	145	55	285	940	880	22	500	190	75	30	M18	**UCTU313-500**	UC313	40
	145	55	285	1 040	980	22	600	190	75	30	M18	**UCTU313-600**	UC313	43
	145	55	285	1 140	1 080	22	700	190	75	30	M18	**UCTU313-700**	UC313	46
	145	55	285	1 240	1 180	22	800	190	75	30	M18	**UCTU313-800**	UC313	49
	145	55	285	1 340	1 280	22	900	190	75	30	M18	**UCTU313-900**	UC313	51
70	150	55	295	960	900	22	500	200	78	33	M18	**UCTU314-500**	UC314	44
	150	55	295	1 060	1 000	22	600	200	78	33	M18	**UCTU314-600**	UC314	46
	150	55	295	1 160	1 100	22	700	200	78	33	M18	**UCTU314-700**	UC314	48
	150	55	295	1 260	1 200	22	800	200	78	33	M18	**UCTU314-800**	UC314	51
	150	55	295	1 360	1 300	22	900	200	78	33	M18	**UCTU314-900**	UC314	53
75	155	55	305	980	920	22	500	210	82	32	M18	**UCTU315-500**	UC315	54
	155	55	305	1 080	1 020	22	600	210	82	32	M18	**UCTU315-600**	UC315	57
	155	55	305	1 180	1 120	22	700	210	82	32	M18	**UCTU315-700**	UC315	59
	155	55	305	1 280	1 220	22	800	210	82	32	M18	**UCTU315-800**	UC315	61
	155	55	305	1 380	1 320	22	900	210	82	32	M18	**UCTU315-900**	UC315	64
80	160	55	315	1 000	940	22	500	220	86	34	M18	**UCTU316-500**	UC316	57
	160	55	315	1 100	1 040	22	600	220	86	34	M18	**UCTU316-600**	UC316	60
	160	55	315	1 200	1 140	22	700	220	86	34	M18	**UCTU316-700**	UC316	62
	160	55	315	1 300	1 240	22	800	220	86	34	M18	**UCTU316-800**	UC316	64
	160	55	315	1 400	1 340	22	900	220	86	34	M18	**UCTU316-900**	UC316	67

Remarks 1. In Part No. of unit and units with covers, fitting codes follow bore diameter numbers. (See **Table 10.5** in P.51.)
2. Part No. of applicable grease nipples are shown below.
C-1/4-28UNF..... 208~210
C-PT1/8..... 211, 212, 313~318
3. As for the triple-lip seal type product, supplementary code L3 follows the Part No. of unit or bearing.
(Example of Part No. : UCTU208JL3-500, UC208L3)

Variations of tolerance of distance from mounting bottom to center of spherical bore (Δ_{Hs}) and variations of tolerance of distance between centers of bolt holes (Δ_{Js})

Unit : mm

Nominal unit code	Δ_{Hs}	Δ_{Js}
UCTU208~212 UCTU313~315	±2	±0.8
UCTU316~318		±1.2

With Cast Iron Covers

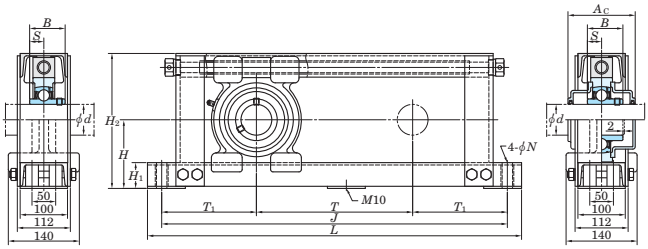

UCTU300

Basic Load Ratings kN		Factor	With Pressed Steel Covers				With Cast Iron Covers			
			Unit No.		Dimension mm	Mass	Unit No.		Dimension mm	Mass
			Open Ends Type	Closed End Type			Open Ends Type	Closed End Type		
C_r	C_{0r}	f_0			A_s	kg			A_c	kg
29.1	17.8	14.0	UCTU208C-500	UCTU208CD-500	68	21	UCTU208FC-500	UCTU208FCD-500	86	22
29.1	17.8	14.0	UCTU208C-600	UCTU208CD-600	68	22	UCTU208FC-600	UCTU208FCD-600	86	23
29.1	17.8	14.0	UCTU208C-700	UCTU208CD-700	68	24	UCTU208FC-700	UCTU208FCD-700	86	25
29.1	17.8	14.0	UCTU208C-800	UCTU208CD-800	68	26	UCTU208FC-800	UCTU208FCD-800	86	27
29.1	17.8	14.0	UCTU208C-900	UCTU208CD-900	68	28	UCTU208FC-900	UCTU208FCD-900	86	29
34.1	21.3	14.0	UCTU209C-500	UCTU209CD-500	68	22	UCTU209FC-500	UCTU209FCD-500	88	23
34.1	21.3	14.0	UCTU209C-600	UCTU209CD-600	68	24	UCTU209FC-600	UCTU209FCD-600	88	25
34.1	21.3	14.0	UCTU209C-700	UCTU209CD-700	68	25	UCTU209FC-700	UCTU209FCD-700	88	26
34.1	21.3	14.0	UCTU209C-800	UCTU209CD-800	68	27	UCTU209FC-800	UCTU209FCD-800	88	28
34.1	21.3	14.0	UCTU209C-900	UCTU209CD-900	68	29	UCTU209FC-900	UCTU209FCD-900	88	30
35.1	23.3	14.4	UCTU210C-500	UCTU210CD-500	73	23	UCTU210FC-500	UCTU210FCD-500	97	24
35.1	23.3	14.4	UCTU210C-600	UCTU210CD-600	73	25	UCTU210FC-600	UCTU210FCD-600	97	26
35.1	23.3	14.4	UCTU210C-700	UCTU210CD-700	73	27	UCTU210FC-700	UCTU210FCD-700	97	28
35.1	23.3	14.4	UCTU210C-800	UCTU210CD-800	73	28	UCTU210FC-800	UCTU210FCD-800	97	29
35.1	23.3	14.4	UCTU210C-900	UCTU210CD-900	73	30	UCTU210FC-900	UCTU210FCD-900	97	31
43.4	29.4	14.4	UCTU211C-500	UCTU211CD-500	75	25	UCTU211FC-500	UCTU211FCD-500	99	26
43.4	29.4	14.4	UCTU211C-600	UCTU211CD-600	75	27	UCTU211FC-600	UCTU211FCD-600	99	28
43.4	29.4	14.4	UCTU211C-700	UCTU211CD-700	75	28	UCTU211FC-700	UCTU211FCD-700	99	29
43.4	29.4	14.4	UCTU211C-800	UCTU211CD-800	75	30	UCTU211FC-800	UCTU211FCD-800	99	31
43.4	29.4	14.4	UCTU211C-900	UCTU211CD-900	75	32	UCTU211FC-900	UCTU211FCD-900	99	33
52.4	36.2	14.4	UCTU212C-500	UCTU212CD-500	88	26	UCTU212FC-500	UCTU212FCD-500	114	28
52.4	36.2	14.4	UCTU212C-600	UCTU212CD-600	88	28	UCTU212FC-600	UCTU212FCD-600	114	30
52.4	36.2	14.4	UCTU212C-700	UCTU212CD-700	88	30	UCTU212FC-700	UCTU212FCD-700	114	32
52.4	36.2	14.4	UCTU212C-800	UCTU212CD-800	88	31	UCTU212FC-800	UCTU212FCD-800	114	33
52.4	36.2	14.4	UCTU212C-900	UCTU212CD-900	88	33	UCTU212FC-900	UCTU212FCD-900	114	35
92.7	59.9	13.2	–	–	–	–	UCTU313C-500	UCTU313CD-500	122	42
92.7	59.9	13.2	–	–	–	–	UCTU313C-600	UCTU313CD-600	122	45
92.7	59.9	13.2	–	–	–	–	UCTU313C-700	UCTU313CD-700	122	48
92.7	59.9	13.2	–	–	–	–	UCTU313C-800	UCTU313CD-800	122	51
92.7	59.9	13.2	–	–	–	–	UCTU313C-900	UCTU313CD-900	122	53
104	68.2	13.2	–	–	–	–	UCTU314C-500	UCTU314CD-500	124	46
104	68.2	13.2	–	–	–	–	UCTU314C-600	UCTU314CD-600	124	48
104	68.2	13.2	–	–	–	–	UCTU314C-700	UCTU314CD-700	124	50
104	68.2	13.2	–	–	–	–	UCTU314C-800	UCTU314CD-800	124	53
104	68.2	13.2	–	–	–	–	UCTU314C-900	UCTU314CD-900	124	55
113	77.2	13.2	–	–	–	–	UCTU315C-500	UCTU315CD-500	134	57
113	77.2	13.2	–	–	–	–	UCTU315C-600	UCTU315CD-600	134	60
113	77.2	13.2	–	–	–	–	UCTU315C-700	UCTU315CD-700	134	62
113	77.2	13.2	–	–	–	–	UCTU315C-800	UCTU315CD-800	134	64
113	77.2	13.2	–	–	–	–	UCTU315C-900	UCTU315CD-900	134	67
123	86.7	13.3	–	–	–	–	UCTU316C-500	UCTU316CD-500	138	60
123	86.7	13.3	–	–	–	–	UCTU316C-600	UCTU316CD-600	138	63
123	86.7	13.3	–	–	–	–	UCTU316C-700	UCTU316CD-700	138	65
123	86.7	13.3	–	–	–	–	UCTU316C-800	UCTU316CD-800	138	67
123	86.7	13.3	–	–	–	–	UCTU316C-900	UCTU316CD-900	138	70

4. The unit should be mounted so that load is applied to the frame mounting surface vertically and downward.
5. If heavy load ($P_r/C_r > 0.12$), vibration, or impact occurs, contact with JTEKT.
6. Tapered bore (with adapter) type bearing units are also available. (Example of Part No. : UKTU208J-500 + H308X, UK208 + H308X)
7. If frame parts need to be corrosion resistant, contact with JTEKT.
8. For the dimensions and forms of applicable bearings, see the dimensional tables of ball bearing for unit.

UCTU
Cylindrical bore (with set screws)
d 85 ~ 90 mm

With Pressed Steel Covers With Cast Iron Covers

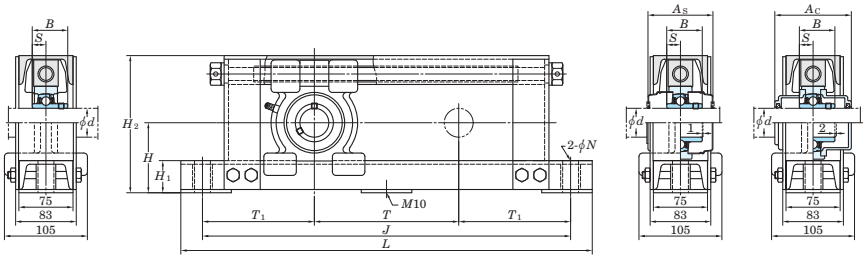

UCTU200

Shaft Dia. mm d	Dimensions mm H	H_1	H_2	L	J	N	T	T_1	B	S	Bolt Size mm	Standard Unit No.	Bearing No.	Mass kg
	165	55	325	1 020	960	22	500	230	96	40	M18	**UCTU317-500**	UC317	62
	165	55	325	1 120	1 060	22	600	230	96	40	M18	**UCTU317-600**	UC317	64
85	165	55	325	1 220	1 160	22	700	230	96	40	M18	**UCTU317-700**	UC317	67
	165	55	325	1 320	1 260	22	800	230	96	40	M18	**UCTU317-800**	UC317	69
	165	55	325	1 420	1 360	22	900	230	96	40	M18	**UCTU317-900**	UC317	71
	170	55	335	1 050	990	22	500	245	96	40	M18	**UCTU318-500**	UC318	65
	170	55	335	1 150	1 090	22	600	245	96	40	M18	**UCTU318-500**	UC318	67
90	170	55	335	1 250	1 190	22	700	245	96	40	M18	**UCTU318-500**	UC318	70
	170	55	335	1 350	1 290	22	800	245	96	40	M18	**UCTU318-500**	UC318	72
	170	55	335	1 450	1 390	22	900	245	96	40	M18	**UCTU318-500**	UC318	74

Remarks 1. In Part No. of unit and units with covers, fitting codes follow bore diameter numbers. (See **Table 10.5** in P.51.)
2. Part No. of applicable grease nipples are shown below.
C-1/4-28UNF..... 208~210
C-PT1/8..... 211, 212, 313~318
3. As for the triple-lip seal type product, supplementary code L3 follows the Part No. of unit or bearing.
(Example of Part No. : UCTU208JL3-500, UC208L3)

Variations of tolerance of distance from mounting bottom to center of spherical bore (Δ_{Hs}) and variations of tolerance of distance between centers of bolt holes (Δ_{Js})

Unit : mm

Nominal unit code	Δ_{Hs}	Δ_{Js}
UCTU208~212 UCTU313~315	±2	±0.8
UCTU316~318		±1.2

With Cast Iron Covers

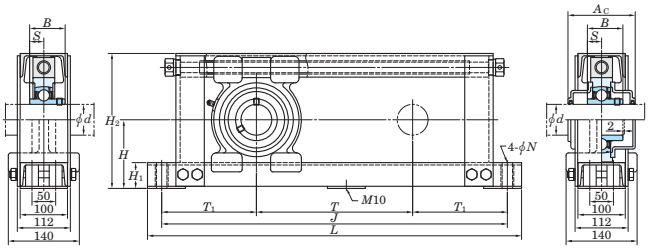

UCTU300

Basic Load Ratings kN		Factor	With Pressed Steel Covers				With Cast Iron Covers			
			Unit No.		Dimension mm	Mass	Unit No.		Dimension mm	Mass
C_r	C_{0r}	f_0	Open Ends Type	Closed End Type	A_s	kg	Open Ends Type	Closed End Type	A_c	kg
133	96.8	13.3	–	–	–	–	UCTU317C-500	UCTU317CD-500	146	65
133	96.8	13.3	–	–	–	–	UCTU317C-600	UCTU317CD-600	146	67
133	96.8	13.3	–	–	–	–	UCTU317C-700	UCTU317CD-700	146	70
133	96.8	13.3	–	–	–	–	UCTU317C-800	UCTU317CD-800	146	72
133	96.8	13.3	–	–	–	–	UCTU317C-900	UCTU317CD-900	146	74
143	107	13.3	–	–	–	–	UCTU318C-500	UCTU318CD-500	150	68
143	107	13.3	–	–	–	–	UCTU318C-600	UCTU318CD-600	150	70
143	107	13.3	–	–	–	–	UCTU318C-700	UCTU318CD-700	150	73
143	107	13.3	–	–	–	–	UCTU318C-800	UCTU318CD-800	150	75
143	107	13.3	–	–	–	–	UCTU318C-900	UCTU318CD-900	150	77

4. The unit should be mounted so that load is applied to the frame mounting surface vertically and downward.
5. If heavy load ($P_r/C_r > 0.12$), vibration, or impact occurs, contact with JTEKT.
6. Tapered bore (with adapter) type bearing units are also available. (Example of Part No. : UKTU208J-500 + H308X, UK208 + H308X)
7. If frame parts need to be corrosion resistant, contact with JTEKT.
8. For the dimensions and forms of applicable bearings, see the dimensional tables of ball bearing for unit.

SBPTH
Cylindrical bore (with set screws)
d 12 ~ 25 mm

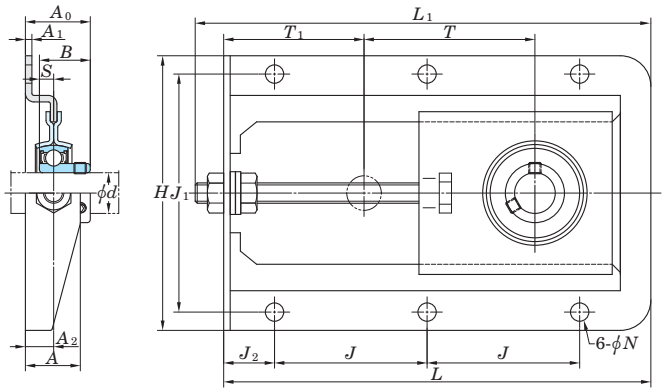

Shaft Dia. mm	Dimensions inch / mm															Bolt Size inch / mm	Unit No.
d	H	L	L_1	A	J	J_1	J_2	N	T	T_1	A_1	A_2	A_0	B	S		
12	5 5/16	8 9/32	8 21/32	1 1/16	2 61/64	4 39/64	31/32	11/32	3 15/32	2 23/32	1/8	35/64	1 3/16	0.866	0.236	5/16	SBPTH201-90
	135	210	220	27	75	117	25	9	88	69	3.2	13.9	29.9	22	6	M8	
15	5 5/16	8 9/32	8 21/32	1 1/16	2 61/64	4 39/64	31/32	11/32	3 15/32	2 23/32	1/8	35/64	1 3/16	0.866	0.236	5/16	SBPTH202-90
	135	210	220	27	75	117	25	9	88	69	3.2	13.9	29.9	22	6	M8	
17	5 5/16	8 9/32	8 21/32	1 1/16	2 61/64	4 39/64	31/32	11/32	3 15/32	2 23/32	1/8	35/64	1 3/16	0.866	0.236	5/16	SBPTH203-90
	135	210	220	27	75	117	25	9	88	69	3.2	13.9	29.9	22	6	M8	
20	5 5/16	8 9/32	8 21/32	1 1/16	2 61/64	4 39/64	31/32	11/32	3 15/32	2 23/32	1/8	35/64	1 1/4	0.984	0.276	5/16	SBPTH204-90
	135	210	220	27	75	117	25	9	88	69	3.2	13.9	31.9	25	7	M8	
25	5 5/16	8 9/32	8 21/32	1 1/16	2 61/64	4 39/64	31/32	11/32	3 15/32	2 23/32	1/8	35/64	1 5/16	1.063	0.295	5/16	SBPTH205-90
	135	210	220	27	75	117	25	9	88	69	3.2	13.9	33.4	27	7.5	M8	

Remark For the dimensions and forms of applicable bearings, see the dimensional tables of ball bearing for unit.

Variations of tolerance of distance between centers of bolt holes (Δ_{Js}, Δ_{J1s})

Unit : mm

Nominal unit code	Δ_{Js}	Δ_{J1s}
SBPTH201~SBPTH205	±0.7	±0.7

	Bearing No.	Basic Load Ratings kN		Factor	Mass
		C_r	C_{0r}	f_0	kg
	SB201	9.55	4.80	13.2	0.91
	SB202	9.55	4.80	13.2	0.91
	SB203	9.55	4.80	13.2	0.91
	SB204	12.8	6.65	13.2	0.91
	SB205	14.0	7.85	13.9	0.91

SBNPTH
Cylindrical bore (with set screws)
d 12 ~ 25 mm

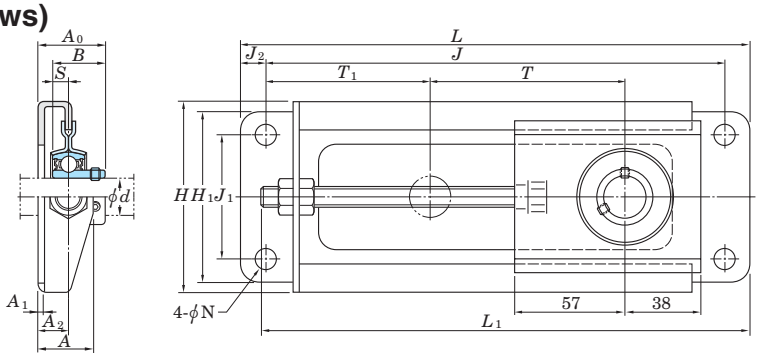

Shaft Dia. mm	Dimensions inch / mm																Bolt Size inch / mm	Unit No.
d	H	H_1	L	L_1	A	J	J_1	J_2	N	T	T_1	A_1	A_2	A_0	B	S		
12	3 15/16	3 17/32	10 1/4	9 11/16	1 1/16	9 1/4	2 9/16	1/2	7/16	3 15/16	3 9/32	1/8	19/32	1 7/32	0.866	0.236	5/16	SBNPTH201-100
	100	90	260	246	27	235	65	12.5	11	100	83.5	3.2	15	31	22	6	M8	
15	3 15/16	3 17/32	10 1/4	9 11/16	1 1/16	9 1/4	2 9/16	1/2	7/16	3 15/16	3 9/32	1/8	19/32	1 7/32	0.866	0.236	5/16	SBNPTH202-100
	100	90	260	246	27	235	65	12.5	11	100	83.5	3.2	15	31	22	6	M8	
17	3 15/16	3 17/32	10 1/4	9 11/16	1 1/16	9 1/4	2 9/16	1/2	7/16	3 15/16	3 9/32	1/8	19/32	1 7/32	0.866	0.236	5/16	SBNPTH203-100
	100	90	260	246	27	235	65	12.5	11	100	83.5	3.2	15	31	22	6	M8	
20	3 15/16	3 17/32	10 1/4	9 11/16	1 1/16	9 1/4	2 9/16	1/2	7/16	3 15/16	3 9/32	1/8	19/32	1 5/16	0.984	0.276	5/16	SBNPTH204-100
	100	90	260	246	27	235	65	12.5	11	100	83.5	3.2	15	33	25	7	M8	
25	3 15/16	3 17/32	10 1/4	9 11/16	1 1/16	9 1/4	2 9/16	1/2	7/16	3 15/16	3 9/32	1/8	19/32	1 11/32	1.063	0.295	5/16	SBNPTH205-100
	100	90	260	246	27	235	65	12.5	11	100	83.5	3.2	15	34.5	27	7.5	M8	

Remark For the dimensions and forms of applicable bearings, see the dimensional tables of ball bearing for unit.

Variations of tolerance of distance between centers of bolt holes (Δ_{Js}, Δ_{J1s})

Unit : mm

Nominal unit code	Δ_{Js}	Δ_{J1s}
SBNPTH201~SBNPTH205	±0.7	±0.7

	Bearing No.	Basic Load Ratings kN		Factor	Mass
		C_r	C_{0r}	f_0	kg
	SB201	9.55	4.80	13.2	0.93
	SB202	9.55	4.80	13.2	0.93
	SB203	9.55	4.80	13.2	0.93
	SB204	12.8	6.65	13.2	0.93
	SB205	14.0	7.85	13.9	0.93

UCC
Cylindrical bore (with set screws)
d 12 ~ (45) mm

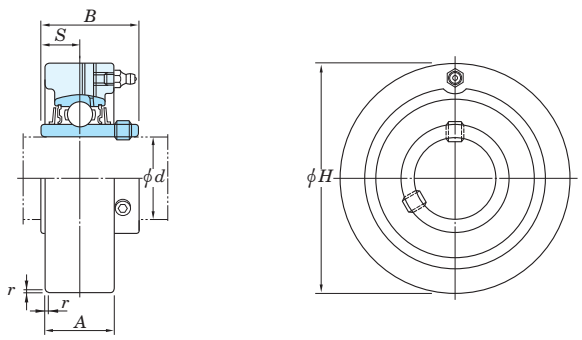

Shaft Dia. mm	Shaft Dia. inch	Dimensions inch / mm H	A	r	B	S	Unit No.	Housing No.	Bearing No.	Basic Load Ratings kN C_r	C_{0r}	Factor f_0	Mass kg
12							UCC201		UC201				0.52
	1/2						UCC201-8		UC201-8				
15		2.835	25/32	0.06	1.220	0.500	UCC202		UC202				0.50
	5/8	72	20	1.5	31	12.7	UCC202-10	C204	UC202-10	12.8	6.65	13.2	
17							UCC203		UC203				0.49
	3/4						UCC204-12		UC204-12				0.47
20							UCC204		UC204				
	7/8						UCC205-14		UC205-14				
	15/16	3.150	55/64	0.06	1.343	0.563	UCC205-15	C205	UC205-15	14.0	7.85	13.9	0.64
		80	22	1.5	34.1	14.3	UCC205		UC205				
25	1						UCC205-16		UC205-16				
		3.543	11/16	0.06	1.500	0.626	UCCX05	CX05	UCX05	19.5	11.3	13.9	1.0
	1	90	27	1.5	38.1	15.9	UCCX05-16		UCX05-16				
		3.543	11/32	0.08	1.496	0.591	UCC305	C305	UC305	21.2	10.9	12.6	1.5
	1	90	26	2	38	15	UCC305-16		UC305-16				
	1 1/8						UCC206-18		UC206-18				
		3.346	11/16	0.06	1.500	0.626	UCC206	C206	UC206	19.5	11.3	13.9	0.81
	1 3/16	85	27	1.5	38.1	15.9	UCC206-19		UC206-19				
	1 1/4						UCC206-20		UC206-20				
30							UCCX06		UCX06				
	1 3/16	3.937	13/16	0.08	1.689	0.689	UCCX06-19	CX06	UCX06-19	25.7	15.4	13.9	1.3
	1 1/4	100	30	2	42.9	17.5	UCCX06-20		UCX06-20				
	–	3.937	17/64	0.08	1.693	0.669	UCC306	C306	UC306	26.7	15.0	13.3	1.7
		100	28	2	43	17							
	1 1/4						UCC207-20		UC207-20				
	1 5/16	3.543	17/64	0.08	1.689	0.689	UCC207-21		UC207-21				
	1 3/8	90	28	2	42.9	17.5	UCC207-22	C207	UC207-22	25.7	15.4	13.9	0.93
							UCC207		UC207				
35	1 7/16						UCC207-23		UC207-23				
	1 3/8						UCCX07-22		UCX07-22				
		4.331	1 11/32	0.08	1.937	0.748	UCCX07	CX07	UCX07	29.1	17.8	14.0	1.7
	1 7/16	110	34	2	49.2	19	UCCX07-23		UCX07-23				
	–	4.331	1 17/64	0.12	1.890	0.748	UCC307	C307	UC307	33.4	19.3	13.2	2.2
		110	32	3	48	19							
	1 1/2						UCC208-24		UC208-24				
	1 9/16	3.937	1 3/16	0.08	1.937	0.748	UCC208-25	C208	UC208-25	29.1	17.8	14.0	1.2
		100	30	2	49.2	19	UCC208		UC208				
40	1 1/2	4.724	1 1/2	0.08	1.937	0.748	UCCX08-24	CX08	UCX08-24	34.1	21.3	14.0	2.3
		120	38	2	49.2	19	UCCX08		UCX08				
	1 1/2	4.724	1 11/32	0.12	2.047	0.748	UCC308-24	C308	UC308-24	40.7	24.0	13.2	2.2
		120	34	3	52	19	UCC308		UC308				
	1 5/8						UCC209-26		UC209-26				
45	1 11/16	4.331	1 7/32	0.08	1.937	0.748	UCC209-27	C209	UC209-27	34.1	21.3	14.0	1.5
	1 3/4	110	31	2	49.2	19	UCC209-28		UC209-28				
							UCC209		UC209				

Remarks 1. In Part No. of unit and units with covers, fitting codes follow bore diameter numbers. (See **Table 10.5** in P.51.)
2. Part No. of applicable grease nipples are shown below.
A-1/4-28UNF ..... 201~213, X05~X12, 305~308
A-PT1/8 ..... 309~328
3. As for the triple-lip seal type product (from 201 to 205 are the double-lip seal type products), supplementary code L3 (L2) follows the Part No. of unit or bearing. (Example of Part No. : UCC206JL3, UC206L3)
4. For the dimensions and forms of applicable bearings, see the dimensional tables of ball bearing for unit.

d (45) ~ 90 mm

Variations of tolerance of outside diameter (Δ_{Hs}), variations of tolerance of width (Δ_{As}), and tolerance of circumferential runout of outside diameter (Y)

Unit : mm

Housing No.			Δ_{Hs}	Δ_{As}	Y
C204~C205			0 −0.030	±0.2	0.2
C206~C210	CX05~CX08	C305~C308	0 −0.035		
	CX09~CX10	C309~C310	0 −0.040		
C211~C213	CX11~CX12	C311~C314		±0.3	0.3
		C315~C318	0 −0.046		
		C319			0.4
		C320~C322	0 −0.052		
		C324~C328	0 −0.057		

Shaft Dia. mm	Shaft Dia. inch	Dimensions inch / mm H	A	r	B	S	Unit No.	Housing No.	Bearing No.	Basic Load Ratings kN C_r	C_{0r}	Factor f_0	Mass kg
45	1 3/4	4.724 120	1 1/2 38	0.08 2	2.031 51.6	0.748 19	**UCCX09-28** **UCCX09**	CX09	UCX09-28 UCX09	35.1	23.3	14.4	2.3
	1 3/4	5.118 130	1 1/2 38	0.12 3	2.244 57	0.866 22	**UCC309-28** **UCC309**	C309	UC309-28 UC309	48.9	29.5	13.3	2.8
50	1 7/8 1 15/16 2	4.724 120	1 19/64 33	0.08 2	2.031 51.6	0.748 19	**UCC210-30** **UCC210-31** **UCC210** **UCC210-32**	C210	UC210-30 UC210-31 UC210 UC210-32	35.1	23.3	14.4	2.0
	1 15/16 2	5.118 130	1 37/64 40	0.1 2.5	2.189 55.6	0.874 22.2	**UCCX10-31** **UCCX10** **UCCX10-32**	CX10	UCX10-31 UCX10 UCX10-32	43.4	29.4	14.4	2.8
	–	5.512 140	1 37/64 40	0.12 3	2.402 61	0.866 22	**UCC310**	C310	UC310	62.0	38.3	13.2	3.2
55	2 2 1/8 2 3/16	4.921 125	1 3/8 35	0.1 2.5	2.189 55.6	0.874 22.2	**UCC211-32** **UCC211-34** **UCC211** **UCC211-35**	C211	UC211-32 UC211-34 UC211 UC211-35	43.4	29.4	14.4	2.2
	2 3/16 2 1/4	5.906 150	1 21/32 42	0.1 2.5	2.563 65.1	1.000 25.4	**UCCX11** **UCCX11-35** **UCCX11-36**	CX11	UCX11 UCX11-35 UCX11-36	52.4	36.2	14.4	4.0
	2	5.906 150	1 47/64 44	0.12 3	2.598 66	0.984 25	**UCC311-32** **UCC311**	C311	UC311-32 UC311	71.6	45.0	13.2	3.9
60	2 1/4 2 3/8 2 7/16	5.118 130	1 1/2 38	0.1 2.5	2.563 65.1	1.000 25.4	**UCC212-36** **UCC212** **UCC212-38** **UCC212-39**	C212	UC212-36 UC212 UC212-38 UC212-39	52.4	36.2	14.4	2.6
	2 7/16	6.299 160	1 47/64 44	0.1 2.5	2.563 65.1	1.000 25.4	**UCCX12** **UCCX12-39**	CX12	UCX12 UCX12-39	57.2	40.1	14.4	4.6
	–	6.299 160	1 13/16 46	0.12 3	2.795 71	1.024 26	**UCC312**	C312	UC312	81.9	52.2	13.2	4.8
65	2 1/2	5.512 140	1 37/64 40	0.1 2.5	2.563 65.1	1.000 25.4	**UCC213-40** **UCC213**	C213	UC213-40 UC213	57.2	40.1	14.4	3.0
	2 1/2	6.693 170	1 31/32 50	0.12 3	2.953 75	1.181 30	**UCC313-40** **UCC313-40**	C313	UC313-40 UC313	92.7	59.9	13.2	5.7
70	2 3/4	7.087 180	2 3/64 52	0.12 3	3.071 78	1.299 33	**UCC314-44** **UCC314**	C314	UC314-44 UC314	104	68.2	13.2	6.7
75	2 15/16 3	7.480 190	2 11/64 55	0.16 4	3.228 82	1.260 32	**UCC315-47** **UCC315** **UCC315-48**	C315	UC315-47 UC315 UC315-48	113	77.2	13.2	7.8
80	–	7.874 200	2 23/64 60	0.16 4	3.386 86	1.339 34	**UCC316**	C316	UC316	123	86.7	13.3	9.2
85	–	8.465 215	2 33/64 64	0.16 4	3.780 96	1.575 40	**UCC317**	C317	UC317	133	96.8	13.3	11.7
90	3 1/2	8.858 225	2 19/32 66	0.16 4	3.780 96	1.575 40	**UCC318-56** **UCC318**	C318	UC318-56 UC318	143	107	13.3	13.1

UCC
Cylindrical bore (with set screws)
d 95 ~ 140 mm

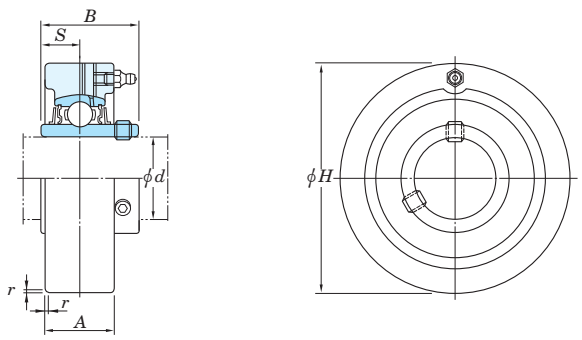

Shaft Dia. mm	Shaft Dia. inch	Dimensions inch / mm					Unit No.	Housing No.	Bearing No.	Basic Load Ratings kN		Factor	Mass
d		H	A	r	B	S				C_r	C_{0r}	f_0	kg
95	–	9.449 240	2 53/64 72	0.16 4	4.055 103	1.614 41	**UCC319**	C319	UC319	153	119	13.3	15.8
100	3 15/16 4	10.236 260	2 61/64 75	0.16 4	4.252 108	1.654 42	**UCC320** **UCC320-63** **UCC320-64**	C320	UC320 UC320-63 UC320-64	173	141	13.2	19.6
105	–	10.236 260	2 61/64 75	0.16 4	4.409 112	1.732 44	**UCC321**	C321	UC321	184	153	13.2	27.0
110	–	11.811 300	3 5/32 80	0.2 5	4.606 117	1.811 46	**UCC322**	C322	UC322	205	180	13.2	29.2
120	–	12.598 320	3 35/64 90	0.2 5	4.961 126	2.008 51	**UCC324**	C324	UC324	207	185	13.5	35.9
130	–	13.386 340	3 15/16 100	0.24 6	5.315 135	2.126 54	**UCC326**	C326	UC326	229	214	13.6	43.0
140	–	14.173 360	3 15/16 100	0.24 6	5.709 145	2.323 59	**UCC328**	C328	UC328	253	246	13.6	52.9

Remarks 1. In Part No. of unit and units with covers, fitting codes follow bore diameter numbers. (See **Table 10.5** in P.51.)
2. Part No. of applicable grease nipples are shown below.
A-1/4-28UNF ..... 201~213, X05~X12, 305~308
A-PT1/8 ..... 309~328
3. As for the triple-lip seal type product (from 201 to 205 are the double-lip seal type products), supplementary code L3 (L2) follows the Part No. of unit or bearing. (Example of Part No. : UCC206JL3, UC206L3)
4. For the dimensions and forms of applicable bearings, see the dimensional tables of ball bearing for unit.

Variations of tolerance of outside diameter (Δ_{Hs}), variations of tolerance of width (Δ_{As}), and tolerance of circumferential runout of outside diameter (Y)

Unit : mm

Housing No.			Δ_{Hs}	Δ_{As}	Y
C204~C205			0 −0.030	±0.2	0.2
C206~C210	CX05~CX08	C305~C308	0 −0.035		
	CX09~CX10	C309~C310	0 −0.040		
C211~C213	CX11~CX12	C311~C314		±0.3	0.3
		C315~C318	0 −0.046		
		C319			0.4
		C320~C322	0 −0.052		
		C324~C328	0 −0.057		

UKC
Tapered bore (with adapter)
d_1 20 ~ 45 mm

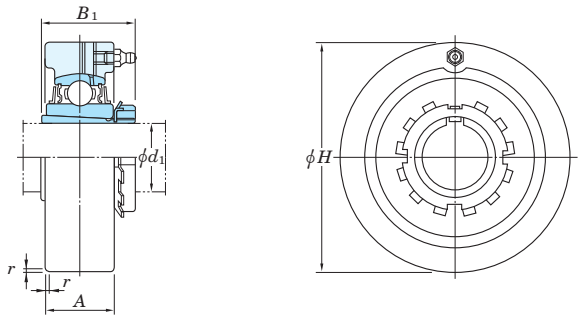

Shaft Dia. mm	Shaft Dia. inch	Dimensions inch / mm H	A	r	B_1 1)	Unit No.	Housing No.	Bearing No.	Basic Load Ratings kN C_r	C_{0r}	Factor f_0	Adapter 1) assembly No.	Mass 1) kg
20	3/4	3.150 80	55/64 22	0.06 1.5	1 5/32(1 3/8) 29(35)	**UKC205**	C205	UK205	14.0	7.85	13.9	HE305X(HE2305X) H305X(H2305X)	0.68(0.70)
	3/4	3.543 90	11/16 27	0.06 1.5	1 3/8 35	**UKCX05**	CX05	UKX05	19.5	11.3	13.9	HE2305X H2305X	0.99
	3/4	3.543 90	11/32 26	0.08 2	1 3/8 35	**UKC305**	C305	UK305	21.2	10.9	12.6	HE2305X H2305X	1.6
25	1	3.346 85	11/16 27	0.06 1.5	1 7/32(1 1/2) 31(38)	**UKC206**	C206	UK206	19.5	11.3	13.9	H306X(H2306X) HE306X(HE2306X)	0.85(0.89)
	1	3.937 100	13/16 30	0.08 2	1 1/2 38	**UKCX06**	CX06	UKX06	25.7	15.4	13.9	H2306X HE2306X	1.3
	1	3.937 100	13/16 28	0.08 2	1 1/2 38	**UKC306**	C306	UK306	26.7	15.0	13.3	H2306X HE2306X	1.8
30	1 1/8	3.543 90	17/64 28	0.08 2	1 3/8(1 11/16) 35(43)	**UKC207**	C207	UK207	25.7	15.4	13.9	HS307X(HS2307X) H307X(H2307X)	0.97(1.0)
	1 1/8	4.331 110	1 11/32 34	0.08 2	1 11/16 43	**UKCX07**	CX07	UKX07	29.1	17.8	14.0	HS2307X H2307X	1.7
	1 1/8	4.331 110	1 17/64 32	0.12 3	1 11/16 43	**UKC307**	C307	UK307	33.4	19.3	13.2	HS2307X H2307X	2.2
35	1 1/4 1 3/8	3.937 100	1 3/16 30	0.08 2	1 13/32(1 13/16) 36(46)	**UKC208**	C208	UK208	29.1	17.8	14.0	HE308X(HE2308X) HS308X(HS2308X) H308X(H2308X)	1.3(1.4)
	1 1/4 1 3/8	4.724 120	1 1/2 38	0.08 2	1 13/16 46	**UKCX08**	CX08	UKX08	34.1	21.3	14.0	HE2308X HS2308X H2308X	2.3
	1 1/4 1 3/8	4.724 120	1 11/32 34	0.12 3	1 13/16 46	**UKC308**	C308	UK308	40.7	24.0	13.2	HE2308X HS2308X H2308X	2.2
40	1 1/2 1 5/8	4.331 110	1 7/32 31	0.08 2	1 17/32(1 31/32) 39(50)	**UKC209**	C209	UK209	34.1	21.3	14.0	HE309X(H2309X) H309X(H2309X) HS309X(H2309X)	1.6(1.7)
	1 1/2 1 5/8	4.724 120	1 1/2 38	0.08 2	1 31/32 50	**UKCX09**	CX09	UKX09	35.1	23.3	14.4	HE2309X H2309X HS2309X	2.3
	1 1/2 1 5/8	5.118 130	1 1/2 38	0.12 3	1 31/32 50	**UKC309**	C309	UK309	48.9	29.5	13.3	HE2309X H2309X HS2309X	2.8
45	1 3/4	4.724 120	1 19/64 33	0.08 2	1 21/32(2 5/32) 42(55)	**UKC210**	C210	UK210	35.1	23.3	14.4	HE310X(HE2310X) H310X(H2310X)	2.0(2.1)
	1 3/4	5.118 130	1 37/64 40	0.1 2.5	2 5/32 55	**UKCX10**	CX10	UKX10	43.4	29.4	14.4	HE2310X H2310X	2.8
	1 3/4	5.512 140	1 37/64 40	0.12 3	2 5/32 55	**UKC310**	C310	UK310	62.0	38.3	13.2	HE2310X H2310X	3.2

Note 1) Numerals shown in parentheses indicate the dimensions, Part No. of applicable adapters (H2300X series), and the unit weight of UK200L3 series (triple-lip seal type).

Remarks 1. In Part No. of unit and units with covers, fitting codes follow bore diameter numbers. (See **Table 10.5** in P.51.)
2. Part No. of applicable grease nipples are shown below.
A-1/4-28UNF ..... 205~213, X05~X12, 305~308
A-PT1/8 ..... 309~328
3. In Part No. of unit with adapters and bearing with adapters, Part No. of applicable adapter follow the Part No. shown in the dimensional tables. (Example of Part No. : UKC206J + H306X, UK206 + H306X)
4. As for the triple-lip seal type product (205 is the double-lip seal type product), supplementary code L3 (or L2) follows the Part No. of unit or bearing. (Example of Part No. : UKC206JL3 + H2306X, UK206L3 + H2306X)
5. As for the dimensions and forms of applicable bearings and adapters, see the dimensional tables of ball bearing for unit and adapter assemblies.

d_1 50 ~ 125 mm

Variations of tolerance of outside diameter (Δ_{Hs}), variations of tolerance of width (Δ_{As}), and tolerance of circumferential runout of outside diameter (Y)

Unit : mm

Housing No.			Δ_{Hs}	Δ_{As}	Y
C205			0 −0.030	±0.2	0.2
C206~C210	CX05~CX08	C305~C308	0 −0.035		
	CX09~CX10	C309~C310	0 −0.040		
C211~C213	CX11~CX12	C311~C314		±0.3	0.3
		C315~C318	0 −0.046		
		C319			0.4
		C320~C322	0 −0.052		
		C324~C328	0 −0.057		

Shaft Dia. mm	Shaft Dia. inch	Dimensions inch / mm H	A	r	B_1 1)	Unit No.	Housing No.	Bearing No.	Basic Load Ratings kN C_r	C_{0r}	Factor f_0	Adapter 1) assembly No.	Mass 1) kg
50	1 7/8 2	4.921 125	1 3/8 35	0.1 2.5	1 25/32(2 5/16) 45(59)	**UKC211**	C211	UK211	43.4	29.4	14.4	HS311X(HS2311X) H311X(H2311X) HE311X(HE2311X)	2.3(2.6)
	1 7/8 2	5.906 150	1 21/32 42	0.1 2.5	2 5/16 59	**UKCX11**	CX11	UKX11	52.4	36.2	14.4	HS2311X H2311X HE2311X	3.8
	1 7/8 2	5.906 150	1 47/64 44	0.12 3	2 5/16 59	**UKC311**	C311	UK311	71.6	45.0	13.2	HS2311X H2311X HE2311X	4.1
55	2 1/8	5.118 130	1 1/2 38	0.1 2.5	1 27/32(2 7/16) 47(62)	**UKC212**	C212	UK212	52.4	36.2	14.4	HS312X(HS2312X) H312X(H2313X)	2.5(2.9)
	2 1/8	6.299 160	1 47/64 44	0.1 2.5	2 7/16 62	**UKCX12**	CX12	UKX12	57.2	40.1	14.4	HS2312X H2312X	4.4
	2 1/8	6.299 160	1 13/16 46	0.12 3	2 7/16 62	**UKC312**	C312	UK312	81.9	52.2	13.2	HS2312X H2312X	4.7
60	2 1/4 2 3/8	5.512 140	1 37/64 40	0.1 2.5	1 31/32(2 9/16) 50(65)	**UKC213**	C213	UK213	57.2	40.1	14.4	HE313X(HE2313X) H313X(H2313X) HS313X(HS2313X)	3.0(3.3)
	2 1/4 2 3/8	6.693 170	1 31/32 50	0.12 3	2 9/16 65	**UKC313**	C313	UK313	92.7	59.9	13.2	HE2313X H2313X HS2313X	5.8
65	2 1/2	7.480 190	2 11/64 55	0.16 4	2 7/8 73	**UKC315**	C315	UK315	113	77.2	13.2	HE2315X H2315X	8.0
70	2 3/4	7.874 200	2 23/64 60	0.16 4	3 1/16 78	**UKC316**	C316	UK316	123	86.7	13.3	HE2316X H2316X	9.2
75	3	8.465 215	2 33/64 64	0.16 4	3 7/32 82	**UKC317**	C317	UK317	133	96.8	13.3	H2317X HE2317X	11.6
80	–	8.858 225	2 19/32 66	0.16 4	3 3/8 86	**UKC318**	C318	UK318	143	107	13.3	H2318X	13.1
85	3 1/4	9.449 240	2 53/64 72	0.16 4	3 17/32 90	**UKC319**	C319	UK319	153	119	13.3	HE2319X H2319X	16.1
90	3 1/2	10.236 260	2 61/64 75	0.16 4	3 13/16 97	**UKC320**	C320	UK320	173	141	13.2	HE2320X H2320X	19.2
100	4	11.811 300	3 5/32 80	0.2 5	4 1/8 105	**UKC322**	C322	UK322	205	180	13.2	H2322X HE2322X	29.1
110	–	12.598 320	3 35/64 90	0.2 5	4 13/32 112	**UKC324**	C324	UK324	207	185	13.5	H2324	36.2
115	4 1/2	13.386 340	3 15/16 100	0.24 6	4 3/4 121	**UKC326**	C326	UK326	229	214	13.6	HE2326 H2326	42.8
125	–	14.173 360	3 15/16 100	0.24 6	5 5/32 131	**UKC328**	C328	UK328	253	246	13.6	H2328	52.9

UCHA
Cylindrical bore (with set screws)
d 12 ~ 75 mm

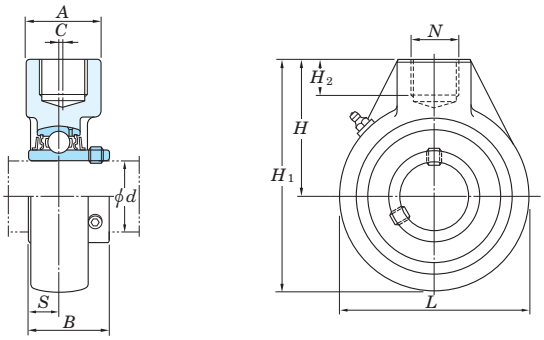

Shaft Dia. mm	Shaft Dia. inch	Dimensions inch / mm H	A	L	H_1	H_2	N	C	B	S	Unit No.	Housing No.	Bearing No.
12											UCHA201		UC201
	1/2										UCHA201-8		UC201-8
15											UCHA202		UC202
	5/8	2 17/32 64	1 9/16 40	2 17/32 64	3 25/32 96	3/4 19	PF 3/4	– –	1.220 31	0.500 12.7	UCHA202-10	HA204	UC202-10
17											UCHA203		UC203
	3/4										UCHA204-12		UC204-12
20											UCHA204		UC204
	7/8										UCHA205-14		UC205-14
25	15/16	2 17/32 64	1 9/16 40	3 1/16 78	4 1/16 103	3/4 19	PF 3/4	– –	1.343 34.1	0.563 14.3	UCHA205-15 UCHA205	HA205	UC205-15 UC205
	1										UCHA205-16		UC205-16
	1 1/8										UCHA206-18		UC206-18
30		2 17/32 64	1 9/16 40	3 1/16 78	4 1/16 103	3/4 19	PF 3/4	– –	1.500 38.1	0.626 15.9	UCHA206	HA206	UC206
	1 3/16										UCHA206-19		UC206-19
	1 1/4										UCHA206-20		UC206-20
	1 1/4										UCHA207-20		UC207-20
	1 5/16										UCHA207-21		UC207-21
35	1 3/8	2 3/4 70	1 9/16 40	3 5/8 92	4 9/16 116	3/4 19	PF 3/4	– –	1.689 42.9	0.689 17.5	UCHA207-22 UCHA207	HA207	UC207-22 UC207
	1 7/16										UCHA207-23		UC207-23
	1 1/2										UCHA208-24		UC208-24
40	1 9/16	2 7/8 73	1 9/16 40	3 25/32 96	4 3/4 121	3/4 19	PF 3/4	5/64 2	1.937 49.2	0.748 19	UCHA208-25 UCHA208	HA208	UC208-25 UC208
	1 5/8										UCHA209-26		UC209-26
45	1 11/16	3 7/32 82	1 7/8 48	4 1/4 108	5 11/32 136	13/16 21	PF 1	13/64 5	1.937 49.2	0.748 19	UCHA209-27 UCHA209-28	HA209	UC209-27 UC209-28
	1 3/4										UCHA209		UC209
	1 7/8										UCHA210-30		UC210-30
50	1 15/16	3 9/32 83	1 7/8 48	4 21/32 118	5 19/32 142	13/16 21	PF 1	13/64 5	2.031 51.6	0.748 19	UCHA210-31 UCHA210	HA210	UC210-31 UC210
											UCHA210-32		UC210-32
	2										UCHA211-32		UC211-32
55	2 1/8	3 7/16 87	2 3/8 60	4 31/32 126	5 29/32 150	31/32 25	PF 1 1/4	9/32 7	2.189 55.6	0.874 22.2	UCHA211-34 UCHA211	HA211	UC211-34 UC211
	2 3/16										UCHA211-35		UC211-35
	2 1/4										UCHA212-36		UC212-36
60		4 1/32 102	2 3/8 60	5 19/32 142	6 13/16 173	1 3/32 28	PF 1 1/4	23/64 9	2.563 65.1	1.000 25.4	UCHA212	HA212	UC212
	2 3/8										UCHA212-38		UC212-38
	2 7/16										UCHA212-39		UC212-39
65	2 1/2	4 19/32 117	2 3/4 70	6 17/32 166	7 7/8 200	1 1/4 32	PF 1 1/2	3/8 9.5	2.563 65.1	1.000 25.4	UCHA213-40 UCHA213	HA213	UC213-40 UC213
70	2 3/4	4 19/32 117	2 3/4 70	6 17/32 166	7 7/8 200	1 1/4 32	PF 1 1/2	3/8 9.5	2.937 74.6	1.189 30.2	UCHA214-44 UCHA214	HA214	UC214-44 UC214
75	2 15/16	4 19/32 117	2 3/4 70	6 17/32 166	7 7/8 200	1 1/4 32	PF 1 1/2	3/8 9.5	3.063 77.8	1.311 33.3	UCHA215-47 UCHA215	HA215	UC215-47 UC215
	3										UCHA215-48		UC215-48

Remarks 1. In Part No. of unit and units with covers, fitting codes follow bore diameter numbers. (See **Table 10.5** in P.51.)
2. Part No. of applicable grease nipples are shown below.
A-1/4-28UNF ..... 201~210
A-PT1/8 ..... 211~215

	Basic Load Ratings kN		Factor	Mass
	C_r	C_{0r}	f_0	kg
	12.8	6.65	13.2	0.77 0.75 0.74 0.72
	14.0	7.85	13.9	0.87
	19.5	11.3	13.9	0.83
	25.7	15.4	13.9	1.2
	29.1	17.8	14.0	1.3
	34.1	21.3	14.0	1.7
	35.1	23.3	14.4	2.1
	43.4	29.4	14.4	2.8
	52.4	36.2	14.4	3.9
	57.2	40.1	14.4	5.8
	62.2	44.1	14.5	5.9
	67.4	48.3	14.5	5.6

3. As for the triple-lip seal type product (from 201 to 205 are the double-lip seal type products), supplementary code L3 (or L2) follows the Part No. of unit or bearing. (Example of Part No. : UCHA206JL3, UC206L3)
4. For the dimensions and forms of applicable bearings, see the dimensional tables of ball bearing for unit.
5. Tapered bore (with adapter) type products are also available. (Example of Part No. : UKHA205J + H305X, UK205 + H305X)

UC, SB, SU
Cylindrical bore (with set screws)
d 8 ~ (30) mm

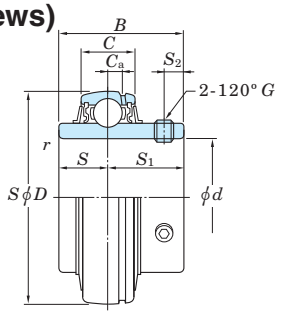

UC

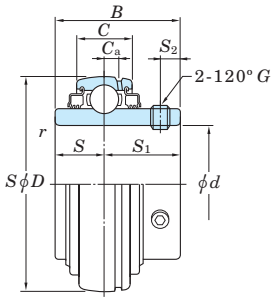

UC-L3

Shaft Dia. mm	Shaft Dia. inch	Dimensions								Basic Load Ratings kN		Factor	Bearing No.	
d		D		B		C		r (min.)		C_r	C_{0r}	f_0	Standard	L3 Type
		mm	inch	mm	inch	mm	inch	mm	inch					
8	–	22	0.866	12	0.472	7	0.276	0.3	0.012	3.27	1.37	12.4	SU08	–
10	–	26	1.024	15	0.591	8	0.315	0.3	0.012	4.55	1.95	12.3	SU000	–
12	–	28	1.102	15	0.591	8	0.315	0.3	0.012	5.10	2.40	13.2	SU001	–
		40	1.575	22	0.866	12	0.472	0.6	0.024	9.55	4.80	13.2	SB201	–
		47	1.850	31	1.220	16	0.630	0.6	0.024	12.8	6.65	13.2	UC201	UC201L2
–	1/2	40	1.575	22	0.866	12	0.472	0.6	0.024	9.55	4.80	13.2	SB201-8	–
		47	1.850	31	1.220	16	0.630	0.6	0.024	12.8	6.65	13.2	UC201-8	UC201-8L2
15	–	32	1.260	16.5	0.650	9	0.354	0.3	0.012	5.60	2.85	13.9	SU002	–
		40	1.575	22	0.866	12	0.472	0.6	0.024	9.55	4.80	13.2	SB202	–
		47	1.850	31	1.220	16	0.630	0.6	0.024	12.8	6.65	13.2	UC202	UC202L2
–	5/8	40	1.575	22	0.866	12	0.472	0.6	0.024	9.55	4.80	13.2	SB202-10	–
		47	1.850	31	1.220	16	0.630	0.6	0.024	12.8	6.65	13.2	UC202-10	UC202-10L2
17	–	35	1.378	17.5	0.689	10	0.394	0.3	0.012	6.00	3.25	14.4	SU003	–
		40	1.575	22	0.866	12	0.472	0.6	0.024	9.55	4.80	13.2	SB203	–
		47	1.850	31	1.220	16	0.630	0.6	0.024	12.8	6.65	13.2	UC203	UC203L2
–	3/4	47	1.850	25	0.984	14	0.551	1	0.039	12.8	6.65	13.2	SB204-12	–
		47	1.850	31	1.220	16	0.630	1	0.039	12.8	6.65	13.2	UC204-12	UC204-12L2
20	–	42	1.654	21	0.827	12	0.472	0.6	0.024	9.40	5.05	13.9	SU004	–
		47	1.850	25	0.984	14	0.551	1	0.039	12.8	6.65	13.2	SB204	–
		47	1.850	31	1.220	16	0.630	1	0.039	12.8	6.65	13.2	UC204	UC204L2
–	7/8	52	2.047	27	1.063	15	0.591	1	0.039	14.0	7.85	13.9	SB205-14	–
		52	2.047	34.1	1.343	17	0.669	1	0.039	14.0	7.85	13.9	UC205-14	UC205-14L2
–	15/16	52	2.047	27	1.063	15	0.591	1	0.039	14.0	7.85	13.9	SB205-15	–
		52	2.047	34.1	1.343	17	0.669	1	0.039	14.0	7.85	13.9	UC205-15	UC205-15L2
25	–	47	1.850	22	0.866	12	0.472	0.6	0.024	10.1	5.85	14.5	SU005	–
		52	2.047	27	1.063	15	0.591	1	0.039	14.0	7.85	13.9	SB205	–
		52	2.047	34.1	1.343	17	0.669	1	0.039	14.0	7.85	13.9	UC205	UC205L2
		62	2.441	38	1.496	22	0.866	1.1	0.043	21.2	10.9	12.6	UC305	–
		62	2.441	38.1	1.500	19	0.748	1	0.039	19.5	11.3	13.9	UCX05	UCX05L3
–	1	52	2.047	27	1.063	15	0.591	1	0.039	14.0	7.85	13.9	SB205-16	–
		52	2.047	34.1	1.343	17	0.669	1	0.039	14.0	7.85	13.9	UC205-16	UC205-16L2
		62	2.441	38	1.496	22	0.866	1.1	0.043	21.2	10.9	12.6	UC305-16	–
		62	2.441	38.1	1.500	19	0.748	1	0.039	19.5	11.3	13.9	UCX05-16	UCX05-16L3
–	1 1/8	62	2.441	30	1.181	16	0.630	1	0.039	19.5	11.3	13.9	SB206-18	–
		62	2.441	38.1	1.500	19	0.748	1	0.039	19.5	11.3	13.9	UC206-18	UC206-18L2
30	–	55	2.165	24.5	0.965	13	0.512	1	0.039	13.2	8.25	14.7	SU006	–
		62	2.441	30	1.181	16	0.630	1	0.039	19.5	11.3	13.9	SB206	–
		62	2.441	38.1	1.500	19	0.748	1	0.039	19.5	11.3	13.9	UC206	UC206L3
		72	2.835	42.9	1.689	20	0.787	1	0.039	25.7	15.4	13.9	UCX06	UCX06L3
		72	2.835	43	1.693	24	0.945	1.1	0.043	26.7	15.0	13.3	UC306	–
–	1 3/16	62	2.441	30	1.181	16	0.630	1	0.039	19.5	11.3	13.9	SB206-19	–
		62	2.441	38.1	1.500	19	0.748	1	0.039	19.5	11.3	13.9	UC206-19	UC206-19L2
		72	2.835	42.9	1.689	20	0.787	1	0.039	25.7	15.4	13.9	UCX06-19	UCX06-19L3
–	1 1/4	62	2.441	30	1.181	16	0.630	1	0.039	19.5	11.3	13.9	SB206-20	–
		62	2.441	38.1	1.500	19	0.748	1	0.039	19.5	11.3	13.9	UC206-20	UC206-20L2
		72	2.835	42.9	1.689	20	0.787	1	0.039	25.7	15.4	13.9	UCX06-20	UCX06-20L3
–	1 1/4	72	2.835	32	1.260	17	0.669	1.1	0.043	25.7	15.4	13.9	SB207-20	–
		72	2.835	42.9	1.689	20	0.787	1.1	0.043	25.7	15.4	13.9	UC207-20	UC207-20L3
–	1 5/16	72	2.835	42.9	1.689	20	0.787	1.1	0.043	25.7	15.4	13.9	UC207-21	UC207-21L3

Remarks 1. SU type product is the “compact” series ball bearing for unit.
2. From UC201 to 205 are the double-lip seal type products (L2).

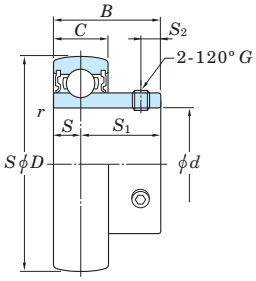

SB

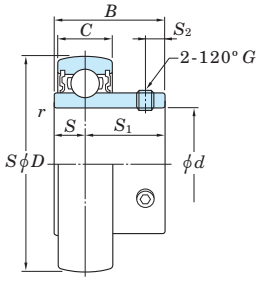

SU

Dimensions								Set Screw Brg. Bore G		Mass
C_a		S		S_1		S_2				
mm	inch	mm	inch	mm	inch	mm	inch	mm	inch	kg
–	–	3.5	0.138	8.5	0.335	2.8	0.110	M3×0.35	–	0.012
–	–	5	0.197	10	0.394	3	0.118	M3×0.35	–	0.024
–	–	5	0.197	10	0.394	3	0.118	M3×0.35	–	0.026
–	–	6	0.236	16	0.630	4	0.157	M5×0.5	–	0.10
4	0.157	12.7	0.500	18.3	0.720	5	0.197	M6×0.75	–	0.21
–	–	6	0.236	16	0.630	4	0.157	–	No.10-32UNF	0.10
4	0.157	12.7	0.500	18.3	0.720	5	0.197	–	1/4-28UNF	0.21
–	–	5.5	0.217	11	0.433	3.3	0.130	M4×0.5	–	0.038
–	–	6	0.236	16	0.630	4	0.157	M5×0.5	–	0.10
4	0.157	12.7	0.500	18.3	0.720	5	0.197	M6×0.75	–	0.19
–	–	6	0.236	16	0.630	4	0.157	–	No.10-32UNF	0.10
4	0.157	12.7	0.500	18.3	0.720	5	0.197	–	1/4-28UNF	0.19
–	–	6	0.236	11.5	0.453	3.3	0.130	M4×0.5	–	0.050
–	–	6	0.236	16	0.630	4	0.157	M5×0.5	–	0.10
4	0.157	12.7	0.500	18.3	0.720	5	0.197	M6×0.75	–	0.18
–	–	7	0.276	18	0.709	5	0.197	–	1/4-28UNF	0.15
4	0.157	12.7	0.500	18.3	0.720	5	0.197	–	1/4-28UNF	0.16
–	–	7	0.276	14	0.551	4	0.157	M5×0.5	–	0.080
–	–	7	0.276	18	0.709	5	0.197	M6×0.75	–	0.15
4	0.157	12.7	0.500	18.3	0.720	5	0.197	M6×0.75	–	0.16
–	–	7.5	0.295	19.5	0.768	5.5	0.217	–	1/4-28UNF	0.18
5	0.197	14.3	0.563	19.8	0.780	5.5	0.217	–	1/4-28UNF	0.23
–	–	7.5	0.295	19.5	0.768	5.5	0.217	–	1/4-28UNF	0.18
5	0.197	14.3	0.563	19.8	0.780	5.5	0.217	–	1/4-28UNF	0.21
–	–	7	0.276	15	0.591	4.5	0.177	M5×0.5	–	0.10
–	–	7.5	0.295	19.5	0.768	5.5	0.217	M6×0.75	–	0.18
5	0.197	14.3	0.563	19.8	0.780	5.5	0.217	M6×0.75	–	0.20
6	0.236	15	0.591	23	0.906	6	0.236	M6×0.75	–	0.45
5	0.197	15.9	0.626	22.2	0.874	6	0.236	M6×0.75	–	0.39
–	–	7.5	0.295	19.5	0.768	5.5	0.217	–	1/4-28UNF	0.18
5	0.197	14.3	0.563	19.8	0.780	5.5	0.217	–	1/4-28UNF	0.20
6	0.236	15	0.591	23	0.906	6	0.236	M6×0.75	–	0.44
5	0.197	15.9	0.626	22.2	0.874	6	0.236	–	1/4-28UNF	0.38
–	–	8	0.315	22	0.866	6	0.236	–	1/4-28UNF	0.27
5	0.197	15.9	0.626	22.2	0.874	6	0.236	–	1/4-28UNF	0.34
–	–	7.5	0.295	17	0.669	5.5	0.217	M5×0.5	–	0.15
–	–	8	0.315	22	0.866	6	0.236	M6×0.75	–	0.27
5	0.197	15.9	0.626	22.2	0.874	6	0.236	M6×0.75	–	0.32
5.5	0.217	17.5	0.689	25.4	1.000	6.5	0.256	M8×1	–	0.58
6.5	0.256	17	0.669	26	1.024	6	0.236	M6×0.75	–	0.56
–	–	8	0.315	22	0.866	6	0.236	–	1/4-28UNF	0.27
5	0.197	15.9	0.626	22.2	0.874	6	0.236	–	1/4-28UNF	0.32
5.5	0.217	17.5	0.689	25.4	1.000	6.5	0.256	–	5/16-28UNF	0.58
–	–	8	0.315	22	0.866	6	0.236	–	1/4-28UNF	0.27
5	0.197	15.9	0.626	22.2	0.874	6	0.236	–	1/4-28UNF	0.30
5.5	0.217	17.5	0.689	25.4	1.000	6.5	0.256	–	5/16-24UNF	0.55
–	–	8.5	0.335	23.5	0.925	6	0.236	–	1/4-28UNF	0.42
5.5	0.217	17.5	0.689	25.4	1.000	6.5	0.256	–	5/16-24UNF	0.54
5.5	0.217	17.5	0.689	25.4	1.000	6.5	0.256	–	5/16-24UNF	0.51

UC, SB, SU
Cylindrical bore (with set screws)
d (30) ~ (60) mm

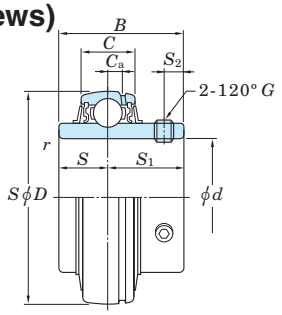

UC

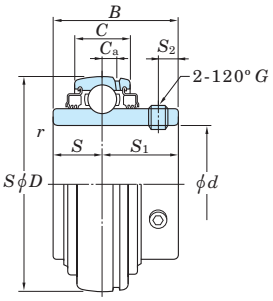

UC-L3

Shaft Dia. mm	Shaft Dia. inch	Dimensions d	D mm	D inch	B mm	B inch	C mm	C inch	r (min.) mm	r (min.) inch	Basic Load Ratings kN C_r	C_{0r}	Factor f_0	Bearing No. Standard	L3 Type
–	1 3/8		72	2.835	32	1.260	17	0.669	1.1	0.043	25.7	15.4	13.9	SB207-22	–
			72	2.835	42.9	1.689	20	0.787	1.1	0.043	25.7	15.4	13.9	UC207-22	UC207-22L3
			80	3.150	49.2	1.937	21	0.827	1.1	0.043	29.1	17.8	14.0	UCX07-22	UCX07-22L3
35	–		72	2.835	32	1.260	17	0.669	1.1	0.043	25.7	15.4	13.9	SB207	–
			72	2.835	42.9	1.689	20	0.787	1.1	0.043	25.7	15.4	13.9	UC207	UC207L3
			80	3.150	49.2	1.937	21	0.827	1.1	0.043	29.1	17.8	14.0	UCX07	UCX07L3
			80	3.150	48	1.890	26	1.024	1.5	0.059	33.4	19.3	13.2	UC307	UC307L3
–	1 7/16		72	2.835	32	1.260	17	0.669	1.1	0.043	25.7	15.4	13.9	SB207-23	–
			72	2.835	42.9	1.689	20	0.787	1.1	0.043	25.7	15.4	13.9	UC207-23	UC207-23L3
			80	3.150	49.2	1.937	21	0.827	1.1	0.043	29.1	17.8	14.0	UCX07-23	UCX07-23L3
–	1 1/2		80	3.150	34	1.339	18	0.709	1.1	0.043	29.1	17.8	14.0	SB208-24	–
			80	3.150	49.2	1.937	21	0.827	1.1	0.043	29.1	17.8	14.0	UC208-24	UC208-24L3
			85	3.346	49.2	1.937	22	0.866	1.1	0.043	34.1	21.3	14.0	UCX08-24	UCX08-24L3
			90	3.543	52	2.047	28	1.102	1.5	0.059	40.7	24.0	13.2	UC308-24	UC308-24L3
–	1 9/16		80	3.150	49.2	1.937	21	0.827	1.1	0.043	29.1	17.8	14.0	UC208-25	UC208-25L3
40	–		80	3.150	34	1.339	18	0.709	1.1	0.043	29.1	17.8	14.0	SB208	–
			80	3.150	49.2	1.937	21	0.827	1.1	0.043	29.1	17.8	14.0	UC208	UC208L3
			85	3.346	49.2	1.937	22	0.866	1.1	0.043	34.1	21.3	14.0	UCX08	UCX08L3
			90	3.543	52	2.047	28	1.102	1.5	0.059	40.7	24.0	13.2	UC308	UC308L3
–	1 5/8		85	3.346	49.2	1.937	22	0.866	1.1	0.043	34.1	21.3	14.0	UC209-26	UC209-26L3
–	1 11/16		85	3.346	49.2	1.937	22	0.866	1.1	0.043	34.1	21.3	14.0	UC209-27	UC209-27L3
–	1 3/4		85	3.346	49.2	1.937	22	0.866	1.1	0.043	34.1	21.3	14.0	UC209-28	UC209-28L3
			90	3.543	51.6	2.031	24	0.945	1.1	0.043	35.1	23.3	14.4	UCX09-28	UCX09-28L3
			100	3.937	57	2.244	30	1.181	1.5	0.059	48.9	29.5	13.3	UC309-28	UC309-28L3
45	–		85	3.346	49.2	1.937	22	0.866	1.1	0.043	34.1	21.3	14.0	UC209	UC209L3
			90	3.543	51.6	2.031	24	0.945	1.1	0.043	35.1	23.3	14.4	UCX09	UCX09L3
			100	3.937	57	2.244	30	1.181	1.5	0.059	48.9	29.5	13.3	UC309	UC309L3
–	1 7/8		90	3.543	51.6	2.031	24	0.945	1.1	0.043	35.1	23.3	14.4	UC210-30	UC210-30L3
–	1 15/16		90	3.543	51.6	2.031	24	0.945	1.1	0.043	35.1	23.3	14.4	UC210-31	UC210-31L3
			100	3.937	55.6	2.189	25	0.984	1.1	0.043	43.4	29.4	14.4	UCX10-31	UCX10-31L3
50	–		90	3.543	51.6	2.031	24	0.945	1.1	0.043	35.1	23.3	14.4	UC210	UC210L3
			100	3.937	55.6	2.189	25	0.984	1.1	0.043	43.4	29.4	14.4	UCX10	UCX10L3
			110	4.331	61	2.402	32	1.260	2	0.079	62.0	38.3	13.2	UC310	UC310L3
–	2		90	3.543	51.6	2.031	24	0.945	1.1	0.043	35.1	23.3	14.4	UC210-32	UC210-32L3
			100	3.937	55.6	2.189	25	0.984	1.1	0.043	43.4	29.4	14.4	UCX10-32	UCX10-32L3
–	2		100	3.937	55.6	2.189	25	0.984	1.5	0.059	43.4	29.4	14.4	UC211-32	UC211-32L3
			120	4.724	66	2.598	34	1.339	2	0.079	71.6	45.0	13.2	UC311-32	UC311-32L3
–	2 1/8		100	3.937	55.6	2.189	25	0.984	1.5	0.059	43.4	29.4	14.4	UC211-34	UC211-34L3
55	–		100	3.937	55.6	2.189	25	0.984	1.5	0.059	43.4	29.4	14.4	UC211	UC211L3
			110	4.331	65.1	2.563	27	1.063	1.5	0.059	52.4	36.2	14.4	UCX11	UCX11L3
			120	4.724	66	2.598	34	1.339	2	0.079	71.6	45.0	13.2	UC311	UC311L3
–	2 3/16		100	3.937	55.6	2.189	25	0.984	1.5	0.059	43.4	29.4	14.4	UC211-35	UC211-35L3
			110	4.331	65.1	2.563	27	1.063	1.5	0.059	52.4	36.2	14.4	UCX11-35	UCX11-35L3
–	2 1/4		110	4.331	65.1	2.563	27	1.063	1.5	0.059	52.4	36.2	14.4	UCX11-36	UCX11-36L3
–	2 1/4		110	4.331	65.1	2.563	27	1.063	1.5	0.059	52.4	36.2	14.4	UC212-36	UC212-36L3
60	–		110	4.331	65.1	2.563	27	1.063	1.5	0.059	52.4	36.2	14.4	UC212	UC212L3
			120	4.724	65.1	2.563	28	1.102	1.5	0.059	57.2	40.1	14.4	UCX12	UCX12L3
			130	5.118	71	2.795	36	1.417	2.1	0.083	81.9	52.2	13.2	UC312	UC312L3
–	2 3/8		110	4.331	65.1	2.563	27	1.063	1.5	0.059	52.4	36.2	14.4	UC212-38	UC212-38L3

Remarks 1. SU type product is the “compact” series ball bearing for unit.
2. From UC201 to 205 are the double-lip seal type products (L2).

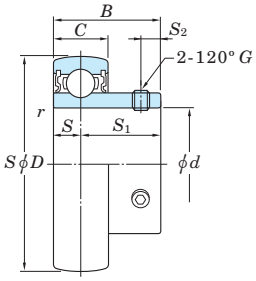

SB

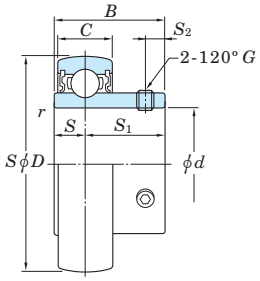

SU

Dimensions								Set Screw Brg. Bore G		Mass
C_a		S		S_1		S_2				
mm	inch	mm	inch	mm	inch	mm	inch	mm	inch	kg
–	–	8.5	0.335	23.5	0.925	6	0.236	–	1/4-28UNF	0.42
5.5	0.217	17.5	0.689	25.4	1.000	6.5	0.256	–	5/16-24UNF	0.48
6	0.236	19	0.748	30.2	1.189	8	0.315	–	5/16-28UNF	0.75
–	–	8.5	0.335	23.5	0.925	6	0.236	M6×0.75	–	0.42
5.5	0.217	17.5	0.689	25.4	1.000	6.5	0.256	M8×1	–	0.48
6	0.236	19	0.748	30.2	1.189	8	0.315	M8×1	–	0.75
7.5	0.295	19	0.748	29	1.142	8	0.315	M8×1	–	0.71
–	–	8.5	0.335	23.5	0.925	6	0.236	–	1/4-28UNF	0.42
5.5	0.217	17.5	0.689	25.4	1.000	6.5	0.256	–	5/16-28UNF	0.45
6	0.236	19	0.748	30.2	1.189	8	0.315	–	5/16-28UNF	0.72
–	–	9	0.354	25	0.984	8	0.315	–	5/16-24UNF	0.60
6	0.236	19	0.748	30.2	1.189	8	0.315	–	5/16-24UNF	0.68
6	0.236	19	0.748	30.2	1.189	8	0.315	–	5/16-28UNF	0.87
8	0.315	19	0.748	33	1.299	10	0.394	M10×1.25	–	1.05
6	0.236	19	0.748	30.2	1.189	8	0.315	–	5/16-24UNF	0.60
–	–	9	0.354	25	0.984	8	0.315	M8×1	–	0.60
6	0.236	19	0.748	30.2	1.189	8	0.315	M8×1	–	0.64
6	0.236	19	0.748	30.2	1.189	8	0.315	M8×1	–	0.83
8	0.315	19	0.748	33	1.299	10	0.394	M10×1.25	–	1.00
6	0.236	19	0.748	30.2	1.189	8	0.315	–	5/16-24UNF	0.78
6	0.236	19	0.748	30.2	1.189	8	0.315	–	5/16-24UNF	0.74
6	0.236	19	0.748	30.2	1.189	8	0.315	–	5/16-24UNF	0.70
6	0.236	19	0.748	32.6	1.283	9	0.354	–	3/8-24UNF	0.97
8.5	0.335	22	0.866	35	1.378	10	0.394	M10×1.25	–	1.35
6	0.236	19	0.748	30.2	1.189	8	0.315	M8×1	–	0.68
6	0.236	19	0.748	32.6	1.283	9	0.354	M10×1.25	–	0.95
8.5	0.335	22	0.866	35	1.378	10	0.394	M10×1.25	–	1.33
6	0.236	19	0.748	32.6	1.283	9	0.354	–	3/8-24UNF	0.87
6	0.236	19	0.748	32.6	1.283	9	0.354	–	3/8-24UNF	0.82
7	0.276	22.2	0.874	33.4	1.315	9	0.354	–	3/8-24UNF	1.32
6	0.236	19	0.748	32.6	1.283	9	0.354	M10×1.25	–	0.80
7	0.276	22.2	0.874	33.4	1.315	9	0.354	M10×1.25	–	1.29
9	0.354	22	0.866	39	1.535	12	0.472	M12×1.5	–	1.69
6	0.236	19	0.748	32.6	1.283	9	0.354	–	3/8-24UNF	0.78
7	0.276	22.2	0.874	33.4	1.315	9	0.354	–	3/8-24UNF	1.26
7	0.276	22.2	0.874	33.4	1.315	9	0.354	–	3/8-24UNF	1.26
10	0.394	25	0.984	41	1.614	12	0.472	M12×1.5	–	2.08
7	0.276	22.2	0.874	33.4	1.315	9	0.354	–	3/8-24UNF	1.15
7	0.276	22.2	0.874	33.4	1.315	9	0.354	M10×1.25	–	1.11
7.5	0.295	25.4	1.000	39.7	1.563	10.5	0.413	M10×1.25	–	1.80
10	0.394	25	0.984	41	1.614	12	0.472	M12×1.5	–	1.90
7	0.276	22.2	0.874	33.4	1.315	9	0.354	–	3/8-24UNF	1.09
7.5	0.295	25.4	1.000	39.7	1.563	10.5	0.413	–	3/8-24UNF	1.78
7.5	0.295	25.4	1.000	39.7	1.563	10.5	0.413	–	3/8-24UNF	1.7
7.5	0.295	25.4	1.000	39.7	1.563	10.5	0.413	–	3/8-24UNF	1.67
7.5	0.295	25.4	1.000	39.7	1.563	10.5	0.413	M10×1.25	–	1.54
7.5	0.295	25.4	1.000	39.7	1.563	12	0.472	M12×1.5	–	2.05
11.5	0.453	26	1.024	45	1.772	12	0.472	M12×1.5	–	2.60
7.5	0.295	25.4	1.000	39.7	1.563	10.5	0.413	–	3/8-24UNF	1.52

UC, SB, SU
Cylindrical bore (with set screws)
d (60) ~ 140 mm

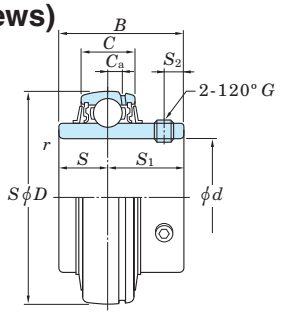

UC

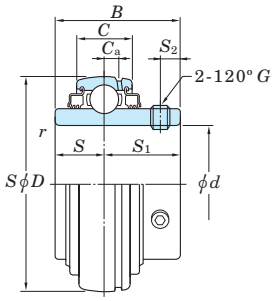

UC-L3

Shaft Dia. mm	Shaft Dia. inch	Dimensions d	D mm	D inch	B mm	B inch	C mm	C inch	r (min.) mm	r (min.) inch	Basic Load Ratings kN C_r	C_{0r}	Factor f_0	Bearing No. Standard	L3 Type
–	2 7/16		110	4.331	65.1	2.563	27	1.063	1.5	0.059	52.4	36.2	14.4	UC212-39	UC212-39L3
			120	4.724	65.1	2.563	28	1.102	1.5	0.059	57.2	40.1	14.4	UCX12-39	UCX12-39L3
–	2 1/2		120	4.724	65.1	2.563	28	1.102	1.5	0.059	57.2	40.1	14.4	UC213-40	UC213-40L3
			125	4.921	74.6	2.937	30	1.181	1.5	0.059	62.2	44.1	14.5	UCX13-40	UCX13-40L3
			140	5.512	75	2.953	38	1.496	2.1	0.083	92.7	59.9	13.2	UC313-40	UC313-40L3
65	–		120	4.724	65.1	2.563	28	1.102	1.5	0.059	57.2	40.1	14.4	UC213	UC213L3
			125	4.921	74.6	2.937	30	1.181	1.5	0.059	62.2	44.1	14.5	UCX13	UCX13L3
			140	5.512	75	2.953	38	1.496	2.1	0.083	92.7	59.9	13.2	UC313	UC313L3
–	2 3/4		125	4.921	74.6	2.937	30	1.181	1.5	0.059	62.2	44.1	14.5	UC214-44	UC214-44L3
			130	5.118	77.8	3.063	32	1.260	1.5	0.059	67.4	48.3	14.5	UCX14-44	UCX14-44L3
			150	5.906	78	3.071	40	1.575	2.1	0.083	104	68.2	13.2	UC314-44	UC314-44L3
70	–		125	4.921	74.6	2.937	30	1.181	1.5	0.059	62.2	44.1	14.5	UC214	UC214L3
			130	5.118	77.8	3.063	32	1.260	1.5	0.059	67.4	48.3	14.5	UCX14	UCX14L3
			150	5.906	78	3.071	40	1.575	2.1	0.083	104	68.2	13.2	UC314	UC314L3
–	2 15/16		130	5.118	77.8	3.063	32	1.260	1.5	0.059	67.4	48.3	14.5	UC215-47	UC215-47L3
			140	5.512	82.6	3.252	33	1.299	1.5	0.059	72.7	53.0	14.6	UCX15-47	UCX15-47L3
			160	6.299	82	3.228	42	1.654	2.1	0.083	113	77.2	13.2	UC315-47	UC315-47L3
75	–		130	5.118	77.8	3.063	32	1.260	1.5	0.059	67.4	48.3	14.5	UC215	UC215L3
			140	5.512	82.6	3.252	33	1.299	1.5	0.059	72.7	53.0	14.6	UCX15	UCX15L3
			160	6.299	82	3.228	42	1.654	2.1	0.083	113	77.2	13.2	UC315	UC315L3
–	3		130	5.118	77.8	3.063	32	1.260	1.5	0.059	67.4	48.3	14.5	UC215-48	UC215-48L3
			140	5.512	82.6	3.252	33	1.299	1.5	0.059	72.7	53.0	14.6	UCX15-48	UCX15-48L3
			160	6.299	82	3.228	42	1.654	2.1	0.083	113	77.2	13.2	UC315-48	UC315-48L3
–	3 1/8		140	5.512	82.6	3.252	33	1.299	2	0.079	72.7	53.0	14.6	UC216-50	UC216-50L3
80	–		140	5.512	82.6	3.252	33	1.299	2	0.079	72.7	53.0	14.6	UC216	UC216L3
			150	5.906	85.7	3.374	35	1.378	2	0.079	84.0	61.9	14.5	UCX16	UCX16L3
			170	6.693	86	3.386	44	1.732	2.1	0.083	123	86.7	13.3	UC316	UC316L3
–	3 1/4		150	5.906	85.7	3.374	35	1.378	2	0.079	84.0	61.9	14.5	UC217-52	UC217-52L3
85	–		150	5.906	85.7	3.374	35	1.378	2	0.079	84.0	61.9	14.5	UC217	UC217L3
			160	6.299	96	3.780	38	1.496	2	0.079	96.1	71.5	14.5	UCX17	UCX17L3
			180	7.087	96	3.780	46	1.811	3	0.118	133	96.8	13.3	UC317	UC317L3
–	3 7/16		160	6.299	96	3.780	38	1.496	2	0.079	96.1	71.5	14.5	UCX17-55	UCX17-55L3
–	3 1/2		160	6.299	96	3.780	38	1.496	2	0.079	96.1	71.5	14.5	UC218-56	UC218-56L3
			190	7.480	96	3.780	48	1.890	3	0.118	143	107	13.3	UC318-56	UC318-56L3
90	–		160	6.299	96	3.780	38	1.496	2	0.079	96.1	71.5	14.5	UC218	UC218L3
			170	6.693	104	4.094	40	1.575	2	0.079	109	81.9	14.4	UCX18	–
			190	7.480	96	3.780	48	1.890	3	0.118	143	107	13.3	UC318	UC318L3
95	–		200	7.874	103	4.055	50	1.969	3	0.118	153	119	13.3	UC319	UC319L3
100	–		190	7.480	117.5	4.626	43	1.693	2.1	0.083	133	105	14.4	UCX20	–
			215	8.465	108	4.252	54	2.126	3	0.118	173	141	13.2	UC320	UC320L3
–	3 15/16		190	7.480	117.5	4.626	43	1.693	2.1	0.083	133	105	14.4	UCX20-63	–
			215	8.465	108	4.252	54	2.126	3	0.118	173	141	13.2	UC320-63	UC320-63L3
–	4		190	7.480	117.5	4.626	43	1.693	2.1	0.083	133	105	14.4	UCX20-64	–
			215	8.465	108	4.252	54	2.126	3	0.118	173	141	13.2	UC320-64	UC320-64L3
105	–		225	8.858	112	4.409	56	2.205	3	0.118	184	153	13.2	UC321	–
110			240	9.449	117	4.606	60	2.362	3	0.118	205	180	13.2	UC322	UC322L3
120			260	10.236	126	4.961	64	2.520	3	0.118	207	185	13.5	UC324	UC324L3
130			280	11.024	135	5.315	68	2.677	4	0.157	229	214	13.6	UC326	UC326L3
140			300	11.811	145	5.709	72	2.835	4	0.157	253	246	13.6	UC328	UC328L3

Remarks 1. SU type product is the “compact” series ball bearing for unit.
2. From UC201 to 205 are the double-lip seal type products (L2).

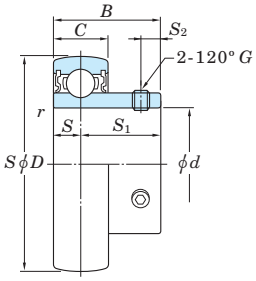

SB

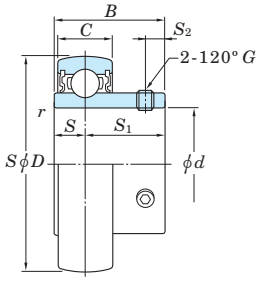

SU

Dimensions								Set Screw Brg. Bore G		Mass
C_a		S		S_1		S_2				
mm	inch	mm	inch	mm	inch	mm	inch	mm	inch	kg
7.5	0.295	25.4	1.000	39.7	1.563	10.5	0.413	–	3/8-24UNF	1.45
7.5	0.295	25.4	1.000	39.7	1.563	12	0.472	–	1/2-20UNF	1.95
7.5	0.295	25.4	1.000	39.7	1.563	12	0.472	–	1/2-20UNF	1.94
9	0.354	30.2	1.189	44.4	1.748	12	0.472	–	1/2-20UNF	2.61
12	0.472	30	1.181	45	1.772	12	0.472	M12×1.5	–	3.24
7.5	0.295	25.4	1.000	39.7	1.563	12	0.472	M12×1.5	–	1.86
9	0.354	30.2	1.189	44.4	1.748	12	0.472	M12×1.5	–	2.52
12	0.472	30	1.181	45	1.772	12	0.472	M12×1.5	–	3.16
9	0.354	30.2	1.189	44.4	1.748	12	0.472	–	1/2-20UNF	2.06
9	0.354	33.3	1.311	44.5	1.752	12	0.472	–	1/2-20UNF	2.75
12.5	0.492	33	1.299	45	1.772	12	0.472	M12×1.5	–	3.91
9	0.354	30.2	1.189	44.4	1.748	12	0.472	M12×1.5	–	2.05
9	0.354	33.3	1.311	44.5	1.752	12	0.472	M12×1.5	–	2.74
12.5	0.492	33	1.299	45	1.772	12	0.472	M12×1.5	–	3.90
9	0.354	33.3	1.311	44.5	1.752	12	0.472	–	1/2-20UNF	2.23
9	0.354	33.3	1.311	49.3	1.941	14	0.551	–	1/2-20UNF	3.43
14.5	0.571	32	1.260	50	1.969	14	0.551	M14×1.5	–	4.72
9	0.354	33.3	1.311	44.5	1.752	12	0.472	M12×1.5	–	2.21
9	0.354	33.3	1.311	49.3	1.941	14	0.551	M12×1.5	–	3.41
14.5	0.571	32	1.260	50	1.969	14	0.551	M14×1.5	–	4.70
9	0.354	33.3	1.311	44.5	1.752	12	0.472	–	1/2-20UNF	2.12
9	0.354	33.3	1.311	49.3	1.941	14	0.551	–	1/2-20UNF	3.32
14.5	0.571	32	1.260	50	1.969	14	0.551	M14×1.5	–	4.61
9	0.354	33.3	1.311	49.3	1.941	14	0.551	–	1/2-20UNF	2.84
9	0.354	33.3	1.311	49.3	1.941	14	0.551	M12×1.5	–	2.79
10	0.394	34.1	1.343	51.6	2.031	14	0.551	M12×1.5	–	3.87
15	0.591	34	1.339	52	2.047	14	0.551	M14×1.5	–	5.60
10	0.394	34.1	1.343	51.6	2.031	14	0.551	–	1/2-20UNF	3.66
10	0.394	34.1	1.343	51.6	2.031	14	0.551	M12×1.5	–	3.45
11	0.433	39.7	1.563	56.3	2.217	15	0.591	M12×1.5	–	5.05
15	0.591	40	1.575	56	2.205	16	0.630	M16×1.5	–	6.90
11	0.433	39.7	1.563	56.3	2.217	15	0.591	–	1/2-20UNF	4.80
11	0.433	39.7	1.563	56.3	2.217	15	0.591	–	1/2-20UNF	4.46
15.5	0.610	40	1.575	56	2.205	16	0.630	M16×1.5	–	8.03
11	0.433	39.7	1.563	56.3	2.217	15	0.591	M12×1.5	–	4.35
11.5	0.453	42.9	1.689	61.1	2.406	16	0.630	M14×1.5	–	6.00
15.5	0.610	40	1.575	56	2.205	16	0.630	M16×1.5	–	7.87
16.5	0.650	41	1.614	62	2.441	18	0.709	M16×1.5	–	8.91
13	0.512	49.2	1.937	68.3	2.689	18	0.709	M16×1.5	–	8.56
18	0.709	42	1.654	66	2.598	20	0.787	M18×1.5	–	11.2
13	0.512	49.2	1.937	68.3	2.689	18	0.709	–	5/8-18UNF	8.56
18	0.709	42	1.654	66	2.598	20	0.787	M18×1.5	–	11.2
13	0.512	49.2	1.937	68.3	2.689	18	0.709	–	5/8-18UNF	8.33
18	0.709	42	1.654	66	2.598	20	0.787	M18×1.5	–	11.0
19	0.748	44	1.732	68	2.677	20	0.787	M18×1.5	–	12.7
20	0.787	46	1.811	71	2.795	20	0.787	M18×1.5	–	15.1
21	0.827	51	2.008	75	2.953	20	0.787	M18×1.5	–	19.0
22	0.866	54	2.126	81	3.189	20	0.787	M20×1.5	–	23.6
23	0.906	59	2.323	86	3.386	20	0.787	M20×1.5	–	29.4

UC-S6, SU-S6 (Stainless-series)
Cylindrical bore (with set screws)
d 10 ~ 50 mm

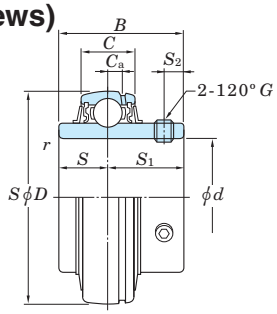

UC-S6

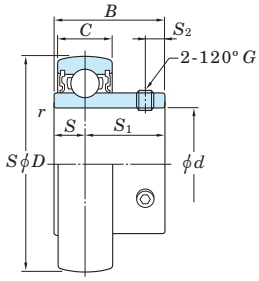

SU-S6

Shaft Dia. mm d	Dimensions D mm	D inch	B mm	B inch	C mm	C inch	r (min.) mm	r (min.) inch	Basic Load Ratings kN C_r	C_{0r}	Factor f_0	Bearing No.
10	26	1.024	15	0.591	8	0.315	0.3	0.012	3.9	1.55	12.3	**SU000S6**
12	28	1.102	15	0.591	8	0.315	0.3	0.012	4.3	1.9	13.2	**SU001S6**
15	32	1.260	16.5	0.650	9	0.354	0.3	0.012	4.7	2.25	13.9	**SU002S6**
17	35	1.378	17.5	0.689	10	0.394	0.3	0.012	5.1	2.6	14.4	**SU003S6**
20	42	1.654	21	0.827	12	0.472	0.6	0.024	7.9	4	13.9	**SU004S6**
	47	1.850	31	1.220	16	0.630	1	0.039	10.9	5.35	13.2	**UC204S6**
25	47	1.850	22	0.866	12	0.472	0.6	0.024	8.5	4.65	14.5	**SU005S6**
	52	2.047	34.1	1.343	17	0.669	1	0.039	11.9	6.3	13.9	**UC205S6**
30	55	2.165	24.5	0.965	13	0.512	1	0.039	11.2	6.6	14.7	**SU006S6**
	62	2.441	38.1	1.500	19	0.748	1	0.039	16.5	9.05	13.9	**UC206S6**
35	72	2.835	42.9	1.689	20	0.787	1.1	0.043	21.8	12.3	13.9	**UC207S6**
40	80	3.150	49.2	1.937	21	0.827	1.1	0.043	24.8	14.3	14.0	**UC208S6**
45	85	3.346	49.2	1.937	22	0.866	1.1	0.043	27.8	16.2	14.0	**UC209S6**
50	90	3.543	51.6	2.031	24	0.945	1.1	0.043	29.8	18.6	14.4	**UC210S6**

	Dimensions								Set Screw Dia.	Mass
	C_a		S		S_1		S_2		G	kg
	mm	inch	mm	inch	mm	inch	mm	inch		
	–	–	5	0.197	10	0.394	3	0.118	M3×0.35	0.024
	–	–	5	0.197	10	0.394	3	0.118	M3×0.35	0.026
	–	–	5.5	0.217	11	0.433	3.3	0.130	M4×0.5	0.038
	–	–	6	0.236	11.5	0.453	3.3	0.130	M4×0.5	0.050
	–	–	7	0.276	14	0.551	4	0.157	M5×0.5	0.080
	4	0.158	12.7	0.500	18.3	0.720	5	0.197	M6×0.75	0.16
	–	–	7	0.276	15	0.591	4.5	0.177	M5×0.5	0.10
	5	0.197	14.3	0.563	19.8	0.780	5.5	0.217	M6×0.75	0.20
	–	–	7.5	0.295	17	0.669	5.5	0.217	M5×0.5	0.15
	5	0.197	15.9	0.626	22.2	0.874	6	0.236	M6×0.75	0.32
	5.5	0.217	17.5	0.689	25.4	1.000	6.5	0.256	M8×1	0.48
	6	0.236	19	0.748	30.2	1.189	8	0.315	M8×1	0.64
	6	0.236	19	0.748	30.2	1.189	8	0.315	M8×1	0.68
	6	0.236	19	0.748	32.6	1.283	8	0.315	M8×1	0.80

UK
Tapered bore (with adapter)
d_1 20 ~ (50) mm

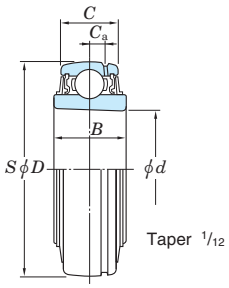

UK

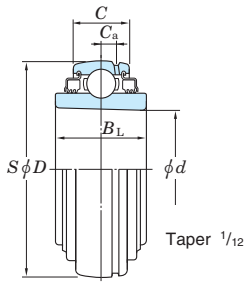

UK-L3

Shaft Dia. mm	Shaft Dia. inch	Dimensions inch / mm d	D	B	B_L	C	C_a	Basic Load Ratings kN C_r	C_{0r}	Factor f_0	Bearing No. Standard	L3 Type	Mass kg Standard	L3 Type
d_1														
20	3/4	0.984 25	2.047 52	0.827 21	0.945 24	0.669 17	0.197 5	14.0	7.85	13.9	UK205	UK205L2	0.16	0.18
	3/4	0.984 25	2.441 62	0.906 23	– –	0.748 19	0.197 5	19.5	11.3	13.9	UKX05	–	0.27	–
	3/4	0.984 25	2.441 62	1.063 27	– –	0.866 22	0.236 6	21.2	10.9	12.6	UK305	–	0.40	–
25	1	1.181 30	2.441 62	0.906 23	1.063 27	0.748 19	0.197 5	19.5	11.3	13.9	UK206	UK206L3	0.25	0.29
	1	1.181 30	2.835 72	1.024 26	– –	0.787 20	0.217 5.5	25.7	15.4	13.9	UKX06	–	0.43	–
	1	1.181 30	2.835 72	1.181 30	– –	0.945 24	0.256 6.5	26.7	15.0	13.3	UK306	–	0.47	–
30	1 1/8	1.378 35	2.835 72	1.024 26	1.181 30	0.787 20	0.217 5.5	25.7	15.4	13.9	UK207	UK207L3	0.37	0.43
	1 1/8	1.378 35	3.150 80	1.063 27	– –	0.827 21	0.236 6	29.1	17.8	14.0	UKX07	–	0.53	–
	1 1/8	1.378 35	3.150 80	1.299 33	1.299 33	1.024 26	0.295 7.5	33.4	19.3	13.2	UK307	UK307L3	0.60	0.60
35	1 1/4 1 3/8	1.575 40	3.150 80	1.063 27	1.339 34	0.827 21	0.236 6	29.1	17.8	14.0	UK208	UK208L3	0.47	0.58
	1 1/4 1 3/8	1.575 40	3.346 85	1.142 29	– –	0.866 22	0.236 6	34.1	21.3	14.0	UKX08	–	0.58	–
	1 1/4 1 3/8	1.575 40	3.543 90	1.378 35	1.378 35	1.102 28	0.315 8	40.7	24.0	13.2	UK308	UK308L3	0.80	0.80
40	1 1/2 1 5/8	1.772 45	3.346 85	1.142 29	1.417 36	0.866 22	0.236 6	34.1	21.3	14.0	UK209	UK209L3	0.52	0.65
	1 1/2 1 5/8	1.772 45	3.543 90	1.142 29	– –	0.945 24	0.236 6	35.1	23.3	14.4	UKX09	–	0.67	–
	1 1/2 1 5/8	1.772 45	3.937 100	1.496 38	1.496 38	1.181 30	0.335 8.5	48.9	29.5	13.3	UK309	UK309L3	1.08	1.08
45	1 3/4	1.969 50	3.543 90	1.142 29	1.417 36	0.945 24	0.236 6	35.1	23.3	14.4	UK210	UK210L3	0.59	0.65
	1 3/4	1.969 50	3.937 100	1.220 31	– –	0.984 25	0.276 7	43.4	29.4	14.4	UKX10	–	0.89	–
	1 3/4	1.969 50	4.331 110	1.575 40	1.575 40	1.260 32	0.354 9	62.0	38.3	13.2	UK310	UK310L3	1.38	1.38
50	1 7/8 2	2.165 55	3.937 100	1.220 31	1.575 40	0.984 25	0.276 7	43.4	29.4	14.4	UK211	UK211L3	0.80	1.09

Remarks 1. In Part No. of unit with adapters, Part No. of applicable adapters follow the Part No. shown in the dimensional tables.
(Example of Part No. : UK206 + H306X, UK206L3 + H2306X)

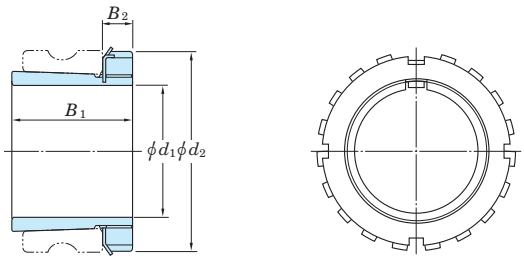

Adapter assembly

H3 Series Adapter						H23 Series Adapter					
Adapter assembly No.	Dimensions inch / mm B_1	B_2	d_2	Mass kg	Sleeve No.	Adapter assembly No.	Dimensions inch / mm B_1	B_2	d_2	Mass kg	Sleeve No.
HE305X H305X	1.142 29	0.315 8	1.496 38	0.075	AE305X A305X	HE2305X H2305X	1.378 35	0.315 8	1.496 38	0.095	AE2305X A2305X
–	– –	– –	– –	–	–	HE2305X H2305X	1.378 35	0.315 8	1.496 38	0.095	AE2305X A2305X
–	– –	– –	– –	–	–	HE2305X H2305X	1.378 35	0.315 8	1.496 38	0.095	AE2305X A2305X
H306X HE306X	1.220 31	0.315 8	1.772 45	0.11	A306X AE306X	H2306X HE2306X	1.496 38	0.315 8	1.772 45	0.13	A2306X HE2306X
–	– –	– –	– –	–	–	H2306X HE2306X	1.496 38	0.315 8	1.772 45	0.13	A2306X HE2306X
–	– –	– –	– –	–	–	H2306X HE2306X	1.496 38	0.315 8	1.772 45	0.13	A2306X HE2306X
HS307X H307X	1.378 35	0.354 9	2.047 52	0.14	AS307X A307X	HS2307X H2307X	1.693 43	0.354 9	2.047 52	0.17	AS2307X A2307X
–	– –	– –	– –	–	–	HS2307X H2307X	1.693 43	0.354 9	2.047 52	0.17	AS2307X A2307X
–	– –	– –	– –	–	–	HS2307X H2307X	1.693 43	0.354 9	2.047 52	0.17	AS2307X A2307X
HE308X HS308X H308X	1.417 36	0.394 10	2.283 58	0.19	AE308X AS308X A308X	HE2308X HS2308X H2308X	1.811 46	0.394 10	2.283 58	0.22	AE2308X AS2308X A2308X
–	– –	– –	– –	–	–	HE2308X HS2308X H2308X	1.811 46	0.394 10	2.283 58	0.22	AE2308X AS2308X A2308X
–	– –	– –	– –	–	–	HE2308X HS2308X H2308X	1.811 46	0.394 10	2.283 58	0.22	AE2308X AS2308X A2308X
HE309X H309X HS309X	1.535 39	0.433 11	2.559 65	0.25	AE309X A309X AS309X	HE2309X H2309X HS2309X	1.969 50	0.433 11	2.559 65	0.28	AE2309X A2309X AS2309X
–	– –	– –	– –	–	–	HE2309X H2309X HS2309X	1.969 50	0.433 11	2.559 65	0.28	AE2309X A2309X AS2309X
–	– –	– –	– –	–	–	HE2309X H2309X HS2309X	1.969 50	0.433 11	2.559 65	0.28	AE2309X A2309X AS2309X
HE310X H310X	1.654 42	0.472 12	2.756 70	0.30	AE310X A310X	HE2310X H2310X	2.165 55	0.472 12	2.756 70	0.36	AE2310X A2310X
–	– –	– –	– –	–	–	HE2310X H2310X	2.165 55	0.472 12	2.756 70	0.36	AE2310X A2310X
–	– –	– –	– –	–	–	HE2310X H2310X	2.165 55	0.472 12	2.756 70	0.36	AE2310X A2310X
HS311X H311X HE311X	1.772 45	0.472 12	2.953 75	0.35	AS311X A311X AE311X	HS2311X H2311X HE2311X	2.323 59	0.472 12	2.953 75	0.42	AS2311X A2311X AE2311X

2. Adapter series applicable to UK200 series
   UK200..... H300X series
   UK200L3 (or L2) ..... H2300X series
3. UK205 is the double-lip seal type product (L2).
4. Inch bore diameter series adapters are also available (see the dimensional tables of adapter assemblies).

UK
Tapered bore (with adapter)
d_1 (50) ~ 85 mm

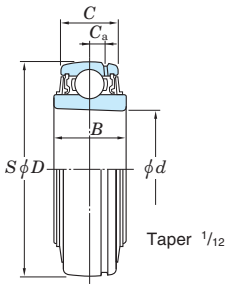

UK

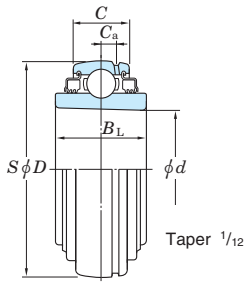

UK-L3

Shaft Dia. mm	Shaft Dia. inch	Dimensions inch / mm						Basic Load Ratings kN		Factor	Bearing No.		Bearing Mass kg	
d_1		d	D	B	B_L	C	C_a	C_r	C_{0r}	f_0	Standard	L3 Type	Standard	L3 Type
50	1 7/8	2.165	4.331	1.299	–	1.063	0.295	52.4	36.2	14.4	UKX11	–	1.15	–
	2	55	110	33	–	27	7.5							
	1 7/8	2.165	4.724	1.693	1.693	1.339	0.394	71.6	45.0	13.2	UK311	UK311L3	1.78	1.78
	2	55	120	43	43	34	10							
55	2 1/8	2.362	4.331	1.299	1.850	1.063	0.295	52.4	36.2	14.4	UK212	UK212L3	1.02	1.41
		60	110	33	47	27	7.5							
	2 1/8	2.362	4.724	1.417	–	1.102	0.295	57.2	40.1	14.4	UKX12	–	1.45	–
		60	120	36	–	28	7.5							
	2 1/8	2.362	5.118	1.850	1.850	1.417	0.453	81.9	52.2	13.2	UK312	UK312L3	2.06	2.06
		60	130	47	47	36	11.5							
60	2 1/4	2.559	4.724	1.417	1.850	1.102	0.295	57.2	40.1	14.4	UK213	UK213L3	1.34	1.67
	2 3/8	65	120	36	47	28	7.5							
	2 1/4	2.559	4.921	1.575	–	1.181	0.354	62.2	44.1	14.5	UKX13	–	1.62	–
	2 3/8	65	125	40	–	30	9							
	2 1/4	2.559	5.512	1.929	1.929	1.496	0.472	92.7	59.9	13.2	UK313	UK313L3	2.71	2.71
	2 3/8	65	140	49	49	38	12							
65	2 1/2	2.953	5.118	1.575	2.008	1.260	0.354	67.4	48.3	14.5	UK215	UK215L3	1.50	1.99
		75	130	40	51	32	9							
	2 1/2	2.953	5.512	1.654	–	1.299	0.354	72.7	53.0	14.6	UKX15	–	2.10	–
		75	140	42	–	33	9							
	2 1/2	2.953	6.299	2.165	2.165	1.654	0.571	113	77.2	13.2	UK315	UK315L3	3.80	3.80
		75	160	55	55	42	14.5							
70	2 3/4	3.150	5.512	1.654	2.165	1.299	0.354	72.7	53.0	14.6	UK216	UK216L3	1.96	2.56
		80	140	42	55	33	9							
	2 3/4	3.150	5.906	1.732	–	1.378	0.394	84.0	61.9	14.5	UKX16	–	2.64	–
		80	150	44	–	35	10							
	2 3/4	3.150	6.693	2.165	2.165	1.732	0.591	123	86.7	13.3	UK316	UK316L3	4.39	4.39
		80	170	55	55	44	15							
75		3.346	5.906	1.732	2.244	1.378	0.394	84.0	61.9	14.5	UK217	UK217L3	2.42	3.10
	3	85	150	44	57	35	10							
		3.346	6.299	1.890	–	1.496	0.433	96.1	71.5	14.5	UKX17	–	3.25	–
	3	85	160	48	–	38	11							
		3.346	7.087	2.362	2.362	1.811	0.591	133	96.8	13.3	UK317	UK317L3	5.30	5.30
	3	85	180	60	60	46	15							
80	–	3.543	6.299	1.890	2.480	1.496	0.433	96.1	71.5	14.5	UK218	UK218L3	2.90	3.77
		90	160	48	63	38	11							
	–	3.543	6.693	1.969	–	1.575	0.453	109	81.9	14.4	UKX18	–	3.80	–
		90	170	50	–	40	11.5							
	–	3.543	7.480	2.362	2.362	1.890	0.610	143	107	13.3	UK318	UK318L3	6.20	6.20
		90	190	60	60	48	15.5							
85	3 1/4	3.740	7.874	2.598	2.598	1.969	0.650	153	119	13.3	UK319	UK319L3	7.31	7.31
		95	200	66	66	50	16.5							

Remarks 1. In Part No. of unit with adapters, Part No. of applicable adapters follow the Part No. shown in the dimensional tables.
(Example of Part No. : UK206 + H306X, UK206L3 + H2306X)

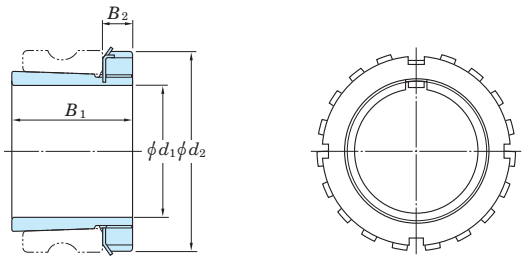

Adapter assembly

H3 Series Adapter						H23 Series Adapter					
Adapter assembly No.	Dimensions inch / mm B_1	B_2	d_2	Mass kg	Sleeve No.	Adapter assembly No.	Dimensions inch / mm B_1	B_2	d_2	Mass kg	Sleeve No.
–	– / –	– / –	– / –	–	–	HS2311X H2311X HE2311X	2.323 / 59	0.472 / 12	2.953 / 75	0.42	AS2311X A2311X AE2311X
–	– / –	– / –	– / –	–	–	HS2311X H2311X HE2311X	2.323 / 59	0.472 / 12	2.953 / 75	0.42	AS2311X A2311X AE2311X
HS312X H312X	1.850 / 47	0.512 / 13	3.150 / 80	0.43	AS312X A312X	HS2312X H2312X	2.441 / 62	0.512 / 13	3.150 / 80	0.48	AS2312X A2312X
–	– / –	– / –	– / –	–	–	HS2312X H2312X	2.441 / 62	0.512 / 13	3.150 / 80	0.48	AS2312X A2312X
–	– / –	– / –	– / –	–	–	HS2312X H2312X	2.441 / 62	0.512 / 13	3.150 / 80	0.48	AS2312X A2312X
HE313X H313X HS313X	1.969 / 50	0.551 / 14	3.346 / 85	0.46	AE313X A313X AS313X	HE2313X H2313X HS2313X	2.559 / 65	0.551 / 14	3.346 / 85	0.56	AE2313X A2313X AS2313X
–	– / –	– / –	– / –	–	–	HE2313X H2313X HS2313X	2.559 / 65	0.551 / 14	3.346 / 85	0.56	AE2313X A2313X AS2313X
–	– / –	– / –	– / –	–	–	HE2313X H2313X HS2313X	2.559 / 65	0.551 / 14	3.346 / 85	0.56	AE2313X A2313X AS2313X
HE315X H315X	2.165 / 55	0.591 / 15	3.858 / 98	0.83	AE315X A315X	HE2315X H2315X	2.874 / 73	0.591 / 15	3.858 / 98	1.05	AE2315X A2315X
–	– / –	– / –	– / –	–	–	HE2315X H2315X	2.874 / 73	0.591 / 15	3.858 / 98	1.05	AE2315X A2315X
–	– / –	– / –	– / –	–	–	HE2315X H2315X	2.874 / 73	0.591 / 15	3.858 / 98	1.05	AE2315X A2315X
HE316X H316X	2.323 / 59	0.669 / 17	4.134 / 105	1.05	AE316X A316X	HE2316X H2316X	3.071 / 78	0.669 / 17	4.134 / 105	1.3	AE2316X A2316X
–	– / –	– / –	– / –	–	–	HE2316X H2316X	3.071 / 78	0.669 / 17	4.134 / 105	1.3	AE2316X A2316X
–	– / –	– / –	– / –	–	–	HE2316X H2316X	3.071 / 78	0.669 / 17	4.134 / 105	1.3	AE2316X A2316X
H317X HE317X	2.480 / 63	0.709 / 18	4.331 / 110	1.2	A317X AE317X	H2317X HE2317X	3.228 / 82	0.709 / 18	4.331 / 110	1.45	A2317X AE2317X
–	– / –	– / –	– / –	–	–	H2317X HE2317X	3.228 / 82	0.709 / 18	4.331 / 110	1.45	A2317X AE2317X
–	– / –	– / –	– / –	–	–	H2317X HE2317X	3.228 / 82	0.709 / 18	4.331 / 110	1.45	A2317X AE2317X
H318X	2.559 / 65	0.709 / 18	4.724 / 120	1.4	A318X	H2318X	3.386 / 86	0.709 / 18	4.724 / 120	1.7	A2318X
–	– / –	– / –	– / –	–	–	H2318X	3.386 / 86	0.709 / 18	4.724 / 120	1.7	A2318X
–	– / –	– / –	– / –	–	–	H2318X	3.386 / 86	0.709 / 18	4.724 / 120	1.7	A2318X
–	– / –	– / –	– / –	–	–	H2319X	3.543 / 90	0.748 / 19	4.921 / 125	1.95	A2319X

2. Adapter series applicable to UK200 series
   UK200..... H300X series
   UK200L3 (or L2) ..... H2300X series
3. UK205 is the double-lip seal type product (L2).
4. Inch bore diameter series adapters are also available (see the dimensional tables of adapter assemblies).

UK
Tapered bore (with adapter)
d_1 90 ~ 125 mm

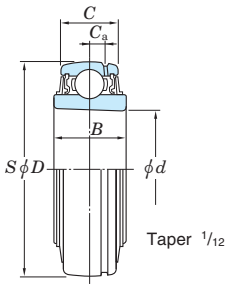

UK

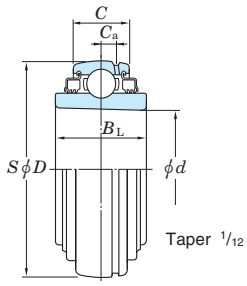

UK-L3

Shaft Dia. mm	Shaft Dia. inch	Dimensions inch / mm						Basic Load Ratings kN		Factor	Bearing No.		Bearing Mass kg	
d_1		d	D	B	B_L	C	C_a	C_r	C_{0r}	f_0	Standard	L3 Type	Standard	L3 Type
90	3 1/2	3.937 100	7.480 190	2.126 54	– –	1.693 43	0.512 13	133	105	14.4	**UKX20**	–	5.36	–
	3 1/2	3.937 100	8.465 215	2.677 68	2.677 68	2.126 54	0.709 18	173	141	13.2	**UK320**	**UK320L3**	8.70	8.70
100	4	4.331 110	9.449 240	3.071 78	3.071 78	2.362 60	0.787 20	205	180	13.2	**UK322**	**UK322L3**	12.2	12.2
110	–	4.724 120	10.236 260	3.425 87	3.425 87	2.520 64	0.827 21	207	185	13.5	**UK324**	**UK324L3**	16.1	16.1
115	4 1/2	5.118 130	11.024 280	3.425 87	3.425 87	2.677 68	0.866 22	229	214	13.6	**UK326**	**UK326L3**	18.8	18.8
125	–	5.512 140	11.811 300	3.819 97	3.819 97	2.835 72	0.906 23	253	246	13.6	**UK328**	**UK328L3**	23.9	23.9

Remarks 1. In Part No. of unit with adapters, Part No. of applicable adapters follow the Part No. shown in the dimensional tables.
(Example of Part No. : UK206 + H306X, UK206L3 + H2306X)

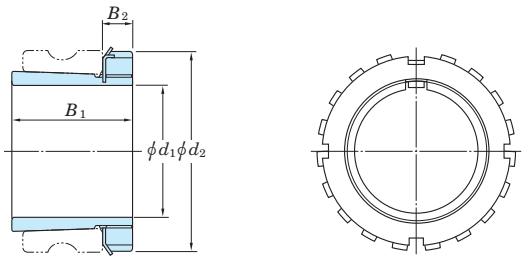

Adapter assembly

	H3 Series Adapter						H23 Series Adapter					
	Adapter assembly No.	Dimensions inch / mm B_1	B_2	d_2	Mass kg	Sleeve No.	Adapter assembly No.	Dimensions inch / mm B_1	B_2	d_2	Mass kg	Sleeve No.
	–	– / –	– / –	– / –	–	–	HE2320X / H2320X	3.819 / 97	0.787 / 20	5.118 / 130	2.2	AE2320X / A2320X
	–	– / –	– / –	– / –	–	–	HE2320X / H2320X	3.819 / 97	0.787 / 20	5.118 / 130	2.2	AE2320X / A2320X
	–	– / –	– / –	– / –	–	–	H2322X / HE2322X	4.134 / 105	0.827 / 21	5.709 / 145	2.75	A2322X / AE2322X
	–	– / –	– / –	– / –	–	–	H2324	4.409 / 112	0.866 / 22	6.102 / 155	3.2	A2324
	–	– / –	– / –	– / –	–	–	HE2326 / H2326	4.764 / 121	0.906 / 23	6.496 / 165	4.6	AE2326 / A2326
	–	– / –	– / –	– / –	–	–	H2328	5.157 / 131	0.945 / 24	7.087 / 180	5.5	A2328

2. Adapter series applicable to UK200 series
   UK200..... H300X series
   UK200L3 (or L2) ..... H2300X series
3. UK205 is the double-lip seal type product (L2).
4. Inch bore diameter series adapters are also available (see the dimensional tables of adapter assemblies).

SA, SA-F, NA
Cylindrical bore
(with eccentric locking collar)
d 12 ~ (30) mm

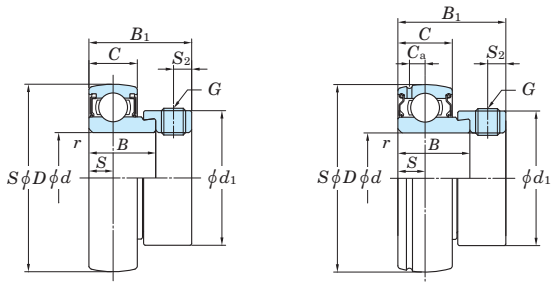

SA SAF

Shaft Dia mm	Shaft Dia inch	Dimensions D mm	D inch	B mm	B inch	B1 mm	B1 inch	C mm	C inch	r (min.) mm	r (min.) inch	Basic Load Ratings kN Cr	Basic Load Ratings kN C0r	Factor f0	Bearing No.
12	–	40	1.575	19	0.784	28.5	1.122	12	0.472	0.6	0.024	9.55	4.80	13.2	SA201
		40	1.575	19.1	0.752	28.6	1.126	13	0.512	0.6	0.024	9.55	4.80	13.2	SA201F
		47	1.850	34.2	1.346	43.7	1.720	16	0.630	1	0.039	12.8	6.65	13.2	NA201
–	1/2	40	1.575	19	0.784	28.5	1.122	12	0.472	0.6	0.024	9.55	4.80	13.2	SA201-8
		40	1.575	19.1	0.752	28.6	1.126	13	0.512	0.6	0.024	9.55	4.80	13.2	SA201-8F
		47	1.850	34.2	1.346	43.7	1.720	16	0.630	1	0.039	12.8	6.65	13.2	NA201-8
15	–	40	1.575	19	0.784	28.5	1.122	12	0.472	0.6	0.024	9.55	4.80	13.2	SA202
		40	1.575	19.1	0.752	28.6	1.126	13	0.512	0.6	0.024	9.55	4.80	13.2	SA202F
		47	1.850	34.2	1.346	43.7	1.720	16	0.630	1	0.039	12.8	6.65	13.2	NA202
–	5/8	40	1.575	19	0.784	28.5	1.122	12	0.472	0.6	0.024	9.55	4.80	13.2	SA202-10
		47	1.850	34.2	1.346	43.7	1.720	16	0.630	1	0.039	12.8	6.65	13.2	NA202-10
17	–	40	1.575	19	0.784	28.5	1.122	12	0.472	0.6	0.024	9.55	4.80	13.2	SA203
		40	1.575	19.1	0.752	28.6	1.126	13	0.512	0.6	0.024	9.55	4.80	13.2	SA203F
		47	1.850	34.2	1.346	43.7	1.720	16	0.630	1	0.039	12.8	6.65	13.2	NA203
–	3/4	47	1.850	20	0.787	29.5	1.161	14	0.551	1	0.039	12.8	6.65	13.2	SA204-12
		47	1.850	21.5	0.846	31	1.220	15	0.591	1	0.039	12.8	6.65	13.2	SA204-12F
		47	1.850	34.2	1.346	43.7	1.720	16	0.630	1	0.039	12.8	6.65	13.2	NA204-12
20	–	47	1.850	20	0.787	29.5	1.161	14	0.551	1	0.039	12.8	6.65	13.2	SA204
		47	1.850	21.5	0.846	31	1.220	15	0.591	1	0.039	12.8	6.65	13.2	SA204F
		47	1.850	34.2	1.346	43.7	1.720	16	0.630	1	0.039	12.8	6.65	13.2	NA204
–	7/8	52	2.047	21	0.827	30.5	1.201	15	0.591	1	0.039	14.0	7.85	13.9	SA205-14
		52	2.047	34.9	1.374	44.4	1.748	17	0.669	1	0.039	14.0	7.85	13.9	NA205-14
–	15/16	52	2.047	21	0.827	30.5	1.201	15	0.591	1	0.039	14.0	7.85	13.9	SA205-15
		52	2.047	21.5	0.846	31	1.220	15	0.591	1	0.039	14.0	7.85	13.9	SA205-15F
		52	2.047	34.9	1.374	44.4	1.748	17	0.669	1	0.039	14.0	7.85	13.9	NA205-15
25	–	52	2.047	21	0.827	30.5	1.201	15	0.591	1	0.039	14.0	7.85	13.9	SA205
		52	2.047	21.5	0.846	31	1.220	15	0.591	1	0.039	14.0	7.85	13.9	SA205F
		52	2.047	34.9	1.374	44.4	1.748	17	0.669	1	0.039	14.0	7.85	13.9	NA205
–	1	52	2.047	21	0.827	30.5	1.201	15	0.591	1	0.039	14.0	7.85	13.9	SA205-16
		52	2.047	21.5	0.846	31	1.220	15	0.591	1	0.039	14.0	7.85	13.9	SA205-16F
		52	2.047	34.9	1.374	44.4	1.748	17	0.669	1	0.039	14.0	7.85	13.9	NA205-16
–	1 1/8	62	2.441	22	0.866	33.9	1.335	16	0.630	1	0.039	19.5	11.3	13.9	SA206-18
		62	2.441	23.8	0.937	35.7	1.406	18	0.709	1	0.039	19.5	11.3	13.9	SA206-18F
		62	2.441	36.5	1.437	48.4	1.906	19	0.748	1	0.039	19.5	11.3	13.9	NA206-18
30	–	62	2.441	22	0.866	33.9	1.335	16	0.630	1	0.039	19.5	11.3	13.9	SA206
		62	2.441	23.8	0.937	35.7	1.406	18	0.709	1	0.039	19.5	11.3	13.9	SA206F
		62	2.441	36.5	1.437	48.4	1.906	19	0.748	1	0.039	19.5	11.3	13.9	NA206
–	1 3/16	62	2.441	22	0.866	33.9	1.335	16	0.630	1	0.039	19.5	11.3	13.9	SA206-19
		62	2.441	23.8	0.937	35.7	1.406	18	0.709	1	0.039	19.5	11.3	13.9	SA206-19F
		62	2.441	36.5	1.437	48.4	1.906	19	0.748	1	0.039	19.5	11.3	13.9	NA206-19
–	1 1/4	62	2.441	22	0.866	33.9	1.335	16	0.630	1	0.039	19.5	11.3	13.9	SA206-20
		62	2.441	23.8	0.937	35.7	1.406	18	0.709	1	0.039	19.5	11.3	13.9	SA206-20F
		62	2.441	36.5	1.437	48.4	1.906	19	0.748	1	0.039	19.5	11.3	13.9	NA206-20
–	1 1/4	72	2.835	23	0.906	36.5	1.437	17	0.669	1.1	0.043	25.7	15.4	13.9	SA207-20
		72	2.835	25.4	1.000	38.9	1.531	19	0.748	1.1	0.043	25.7	15.4	13.9	SA207-20F
		72	2.835	37.6	1.480	51.1	2.012	20	0.787	1.1	0.043	25.7	15.4	13.9	NA207-20
–	1 5/16	72	2.835	23	0.906	36.5	1.437	17	0.669	1.1	0.043	25.7	15.4	13.9	SA207-21
		72	2.835	25.4	1.000	38.9	1.531	19	0.748	1.1	0.043	25.7	15.4	13.9	SA207-21F
		72	2.835	37.6	1.480	51.1	2.012	20	0.787	1.1	0.043	25.7	15.4	13.9	NA207-21

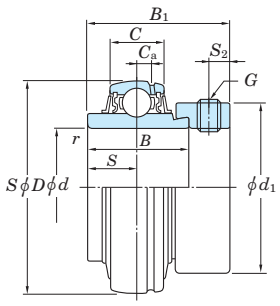

NA

Dimensions								Set Screw Brg.Bore		Mass
C_a		S		S_2		d_1				
mm	inch	mm	inch	mm	inch	mm	inch	mm	inch	kg
–	–	6	0.236	4.8	0.189	28.6	1.126	M6×0.75	–	0.13
3.4	0.134	6.5	0.256	4.8	0.189	28.6	1.126	M6×0.75	–	0.13
4	0.157	17.1	0.673	4.8	0.189	33.3	1.311	M6×0.75	–	0.29
–	–	6	0.236	4.8	0.189	28.6	1.126	–	1/4-28UNF	0.13
3.4	0.134	6.5	0.256	4.8	0.189	28.6	1.126	–	1/4-28UNF	0.13
4	0.157	17.1	0.673	4.8	0.189	33.3	1.311	–	1/4-28UNF	0.29
–	–	6	0.236	4.8	0.189	28.6	1.126	M6×0.75	–	0.13
3.4	0.134	6.5	0.256	4.8	0.189	28.6	1.126	M6×0.75	–	0.13
4	0.157	17.1	0.673	4.8	0.189	33.3	1.311	M6×0.75	–	0.27
–	–	6	0.236	4.8	0.189	28.6	1.126	–	1/4-28UNF	0.13
4	0.157	17.1	0.673	4.8	0.189	33.3	1.311	–	1/4-28UNF	0.26
–	–	6	0.236	4.8	0.189	28.6	1.126	M6×0.75	–	0.13
3.4	0.134	6.5	0.256	4.8	0.189	28.6	1.126	M6×0.75	–	0.13
4	0.157	17.1	0.673	4.8	0.189	33.3	1.311	M6×0.75	–	0.25
–	–	7	0.276	4.8	0.189	33.3	1.311	–	1/4-28UNF	0.15
3.7	0.146	7.5	0.295	4.8	0.189	33.3	1.311	–	1/4-28UNF	0.19
4	0.157	17.1	0.673	4.8	0.189	33.3	1.311	–	1/4-28UNF	0.23
–	–	7	0.276	4.8	0.189	33.3	1.311	M6×0.75	–	0.15
3.7	0.146	7.5	0.295	4.8	0.189	33.3	1.311	M6×0.75	–	0.19
4	0.157	17.1	0.673	4.8	0.189	33.3	1.311	M6×0.75	–	0.22
–	–	7.5	0.295	4.8	0.189	38.1	1.311	–	1/4-28UNF	0.22
5	0.197	17.5	0.689	4.8	0.189	38.1	1.500	–	1/4-28UNF	0.27
–	–	7.5	0.295	4.8	0.189	38.1	1.311	–	1/4-28UNF	0.22
3.7	0.146	7.5	0.295	4.8	0.189	38.1	1.311	–	1/4-28UNF	0.23
5	0.197	17.5	0.689	4.8	0.189	38.1	1.500	–	1/4-28UNF	0.29
–	–	7.5	0.295	4.8	0.189	38.1	1.311	M6×0.75	–	0.22
3.7	0.146	7.5	0.295	4.8	0.189	38.1	1.311	M6×0.75	–	0.23
5	0.197	17.5	0.689	4.8	0.189	38.1	1.500	M6×0.75	–	0.25
–	–	7.5	0.295	4.8	0.189	38.1	1.311	–	1/4-28UNF	0.22
3.7	0.146	7.5	0.295	4.8	0.189	38.1	1.311	–	1/4-28UNF	0.23
5	0.197	17.5	0.689	4.8	0.189	38.1	1.500	–	1/4-28UNF	0.25
–	–	8	0.315	6	0.236	44.5	1.752	–	5/16-24UNF	0.3
4.7	0.185	9	0.354	6	0.236	44.5	1.752	–	5/16-24UNF	0.34
5	0.197	18.3	0.720	6	0.236	44.5	1.752	–	5/16-24UNF	0.43
–	–	8	0.315	6	0.236	44.5	1.752	M8×1	–	0.3
4.7	0.185	9	0.354	6	0.236	44.5	1.752	M8×1	–	0.34
5	0.197	18.3	0.720	6	0.236	44.5	1.752	M8×1	–	0.41
–	–	8	0.315	6	0.236	44.5	1.752	–	5/16-24UNF	0.3
4.7	0.185	9	0.354	6	0.236	44.5	1.752	–	5/16-24UNF	0.34
5	0.197	18.3	0.720	6	0.236	44.5	1.752	–	5/16-24UNF	0.41
–	–	8	0.315	6	0.236	44.5	1.752	–	5/16-24UNF	0.3
4.7	0.185	9	0.354	6	0.236	44.5	1.752	–	5/16-24UNF	0.34
5	0.197	18.3	0.720	6	0.236	44.5	1.752	–	5/16-24UNF	0.38
–	–	8.5	0.335	6.8	0.268	55.6	2.189	–	5/16-24UNF	0.5
5.7	0.224	9.5	0.335	6.8	0.268	55.6	2.189	–	5/16-24UNF	0.57
5.5	0.217	18.8	0.740	6.8	0.268	55.6	2.189	–	5/16-24UNF	0.68
–	–	8.5	0.335	6.8	0.268	55.6	2.189	–	5/16-24UNF	0.5
5.7	0.224	9.5	0.335	6.8	0.268	55.6	2.189	–	5/16-24UNF	0.57
5.5	0.217	18.8	0.740	6.8	0.268	55.6	2.189	–	5/16-24UNF	0.65

SA, SA-F, NA
Cylindrical bore
(with eccentric locking collar)
d (30) ~ 75 mm

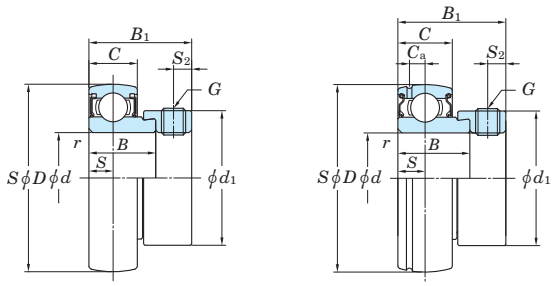

SA SAF

Shaft Dia mm	Shaft Dia inch	Dimensions D mm	D inch	B mm	B inch	B1 mm	B1 inch	C mm	C inch	r (min.) mm	r (min.) inch	Basic Load Ratings kN Cr	Basic Load Ratings kN C0r	Factor f0	Bearing No.
–	1 3/8	72	2.835	23	0.906	36.5	1.437	17	0.669	1.1	0.043	25.7	15.4	13.9	**SA207-22**
		72	2.835	25.4	1.000	38.9	1.531	19	0.748	1.1	0.043	25.7	15.4	13.9	**SA207-22F**
		72	2.835	37.6	1.480	51.1	2.012	20	0.787	1.1	0.043	25.7	15.4	13.9	**NA207-22**
35	–	72	2.835	23	0.906	36.5	1.437	17	0.669	1.1	0.043	25.7	15.4	13.9	**SA207**
		72	2.835	25.4	1.000	38.9	1.531	19	0.748	1.1	0.043	25.7	15.4	13.9	**SA207F**
		72	2.835	37.6	1.480	51.1	2.012	20	0.787	1.1	0.043	25.7	15.4	13.9	**NA207**
–	1 7/16	72	2.835	23	0.906	36.5	1.437	17	0.669	1.1	0.043	25.7	15.4	13.9	**SA207-23**
		72	2.835	25.4	1.000	38.9	1.531	19	0.748	1.1	0.043	25.7	15.4	13.9	**SA207-23F**
		72	2.835	37.6	1.480	51.1	2.012	20	0.787	1.1	0.043	25.7	15.4	13.9	**NA207-23**
–	1 1/2	80	3.150	27	1.063	40.5	1.595	18	0.709	1.1	0.043	29.1	17.8	14.0	**SA208-24**
		80	3.150	30.2	1.189	43.7	1.720	22	0.866	1.1	0.043	29.1	17.8	14.0	**SA208-24F**
		80	3.150	42.8	1.685	56.3	2.217	21	0.827	1.1	0.043	29.1	17.8	14.0	**NA208-24**
–	1 9/16	80	3.150	27	1.063	40.5	1.595	18	0.709	1.1	0.043	29.1	17.8	14.0	**SA208-25**
		80	3.150	30.2	1.189	43.7	1.720	22	0.866	1.1	0.043	29.1	17.8	14.0	**SA208-25F**
		80	3.150	42.8	1.685	56.3	2.217	21	0.827	1.1	0.043	29.1	17.8	14.0	**NA208-25**
40	–	80	3.150	27	1.063	40.5	1.595	18	0.709	1.1	0.043	29.1	17.8	14.0	**SA208**
		80	3.150	30.2	1.189	43.7	1.720	22	0.866	1.1	0.043	29.1	17.8	14.0	**SA208F**
		80	3.150	42.8	1.685	56.3	2.217	21	0.827	1.1	0.043	29.1	17.8	14.0	**NA208**
–	1 5/8	85	3.346	30.2	1.189	43.7	1.720	22	0.866	1.1	0.043	34.1	21.3	14.0	**SA209-26F**
		85	3.346	42.8	1.685	56.3	2.217	22	0.866	1.1	0.043	34.1	21.3	14.0	**NA209-26**
–	1 11/16	85	3.346	30.2	1.189	43.7	1.720	22	0.866	1.1	0.043	34.1	21.3	14.0	**SA209-27F**
		85	3.346	42.8	1.685	56.3	2.217	22	0.866	1.1	0.043	34.1	21.3	14.0	**NA209-27**
–	1 3/4	85	3.346	30.2	1.189	43.7	1.720	22	0.866	1.1	0.043	34.1	21.3	14.0	**SA209-28F**
		85	3.346	42.8	1.685	56.3	2.217	22	0.866	1.1	0.043	34.1	21.3	14.0	**NA209-28**
45	–	85	3.346	30.2	1.189	43.7	1.720	22	0.866	1.1	0.043	34.1	21.3	14.0	**SA209F**
		85	3.346	42.8	1.685	56.3	2.217	22	0.866	1.1	0.043	34.1	21.3	14.0	**NA209**
–	1 7/8	90	3.543	30.2	1.189	43.7	1.720	22	0.866	1.1	0.043	35.1	23.3	14.4	**SA210-30F**
		90	3.543	49.2	1.937	62.7	2.469	24	0.945	1.1	0.043	35.1	23.3	14.4	**NA210-30**
–	1 15/16	90	3.543	30.2	1.189	43.7	1.720	22	0.866	1.1	0.043	35.1	23.3	14.4	**SA210-31F**
		90	3.543	49.2	1.937	62.7	2.469	24	0.945	1.1	0.043	35.1	23.3	14.4	**NA210-31**
50	–	90	3.543	30.2	1.189	43.7	1.720	22	0.866	1.1	0.043	35.1	23.3	14.4	**SA210F**
		90	3.543	49.2	1.937	62.7	2.469	24	0.945	1.1	0.043	35.1	23.3	14.4	**NA210**
–	2	90	3.543	49.2	1.937	62.7	2.469	24	0.945	1.1	0.043	35.1	23.3	14.4	**NA210-32**
		100	3.937	32.4	1.276	48.4	1.906	24	0.945	1.5	0.059	43.4	29.4	14.4	**SA211-32F**
		100	3.937	55.5	2.185	71.4	2.811	25	0.984	1.5	0.059	43.4	29.4	14.4	**NA211-32**
–	2 1/8	100	3.937	32.4	1.276	48.4	1.906	24	0.945	1.5	0.059	43.4	29.4	14.4	**SA211-34F**
		100	3.937	55.5	2.185	71.4	2.811	25	0.984	1.5	0.059	43.4	29.4	14.4	**NA211-34**
55	–	100	3.937	32.4	1.276	48.4	1.906	24	0.945	1.5	0.059	43.4	29.4	14.4	**SA211F**
		100	3.937	55.5	2.185	71.4	2.811	25	0.984	1.5	0.059	43.4	29.4	14.4	**NA211**
–	2 3/16	100	3.937	32.4	1.276	48.4	1.906	24	0.945	1.5	0.059	43.4	29.4	14.4	**SA211-35F**
		100	3.937	55.5	2.185	71.4	2.811	25	0.984	1.5	0.059	43.4	29.4	14.4	**NA211-35**
	2 1/4	110	4.331	61.9	2.437	77.8	3.063	27	1.063	1.5	0.059	52.4	36.2	14.4	**NA212-36**
60		110	4.331	61.9	2.437	77.8	3.063	27	1.063	1.5	0.059	52.4	36.2	14.4	**NA212**
	2 1/2	120	4.724	68.2	2.685	85.7	3.374	28	1.102	1.5	0.059	57.2	40.1	14.4	**NA213-40**
65		120	4.724	68.2	2.685	85.7	3.374	28	1.102	1.5	0.059	57.2	40.1	14.4	**NA213**
	2 3/4	125	4.921	68.2	2.685	85.7	3.374	30	1.181	1.5	0.059	62.2	44.1	14.5	**NA214-44**
70		125	4.921	68.2	2.685	85.7	3.374	30	1.181	1.5	0.059	62.2	44.1	14.5	**NA214**
75		130	5.118	74.6	2.937	92.1	3.626	32	1.260	1.5	0.059	67.4	48.3	14.5	**NA215**
	3	130	5.118	74.6	2.937	92.1	3.626	32	1.260	1.5	0.059	67.4	48.3	14.5	**NA215-48**

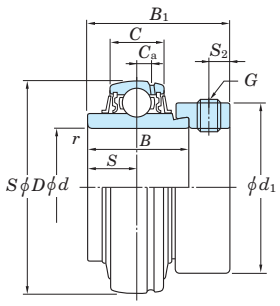

NA

	Dimensions								Set Screw Brg.Bore		Mass
	C_a		S		S_2		d_1				
	mm	inch	mm	inch	mm	inch	mm	inch	mm	inch	kg
	–	–	8.5	0.335	6.8	0.268	55.6	2.189	–	5/16-24UNF	0.5
	5.7	0.224	9.5	0.335	6.8	0.268	55.6	2.189	–	5/16-24UNF	0.57
	5.5	0.217	18.8	0.740	6.8	0.268	55.6	2.189	–	5/16-24UNF	0.61
	–	–	8.5	0.335	6.8	0.268	55.6	2.189	M8×1	–	0.5
	5.7	0.224	9.5	0.335	6.8	0.268	55.6	2.189	M8×1	–	0.57
	5.5	0.217	18.8	0.740	6.8	0.268	55.6	2.189	M8×1	–	0.61
	–	–	8.5	0.335	6.8	0.268	55.6	2.189	–	5/16-24UNF	0.5
	5.7	0.224	9.5	0.335	6.8	0.268	55.6	2.189	–	5/16-24UNF	0.57
	5.5	0.217	18.8	0.740	6.8	0.268	55.6	2.189	–	5/16-24UNF	0.58
	–	–	9	0.354	6.8	0.268	60.3	2.374	–	5/16-24UNF	0.67
	6.4	0.252	11	0.433	6.8	0.268	60.3	2.374	–	5/16-24UNF	0.75
	6	0.236	21.4	0.843	6.8	0.268	60.3	2.374	–	5/16-24UNF	0.83
	–	–	9	0.354	6.8	0.268	60.3	2.374	–	5/16-24UNF	0.67
	6.4	0.252	11	0.433	6.8	0.268	60.3	2.374	–	5/16-24UNF	0.75
	6	0.236	21.4	0.843	6.8	0.268	60.3	2.374	–	5/16-24UNF	0.79
	–	–	9	0.354	6.8	0.268	60.3	2.374	M8×1	–	0.67
	6.4	0.252	11	0.433	6.8	0.268	60.3	2.374	M8×1	–	0.75
	6	0.236	21.4	0.843	6.8	0.268	60.3	2.374	M8×1	–	0.78
	6	0.236	11	0.433	6.8	0.268	63.5	2.500	–	5/16-24UNF	0.82
	6	0.236	21.4	0.843	6.8	0.268	63.5	2.500	–	5/16-24UNF	0.96
	6	0.236	11	0.433	6.8	0.268	63.5	2.500	–	5/16-24UNF	0.82
	6	0.236	21.4	0.843	6.8	0.268	63.5	2.500	–	5/16-24UNF	0.91
	6	0.236	11	0.433	6.8	0.268	63.5	2.500	–	5/16-24UNF	0.82
	6	0.236	21.4	0.843	6.8	0.268	63.5	2.500	–	5/16-24UNF	0.87
	6	0.236	11	0.433	6.8	0.268	63.5	2.500	M8×1	–	0.82
	6	0.236	21.4	0.843	6.8	0.268	63.5	2.500	M8×1	–	0.85
	6.6	0.260	11	0.433	6.8	0.268	69.9	2.752	–	5/16-24UNF	0.85
	6	0.236	24.6	0.969	6.8	0.268	69.9	2.752	–	5/16-24UNF	1.08
	6.6	0.260	11	0.433	6.8	0.268	69.9	2.752	–	5/16-24UNF	0.85
	6	0.236	24.6	0.969	6.8	0.268	69.9	2.752	–	5/16-24UNF	1.04
	6.6	0.260	11	0.433	6.8	0.268	69.9	2.752	M8×1	–	0.85
	6	0.236	24.6	0.969	6.8	0.268	69.9	2.752	M8×1	–	1.01
	6	0.236	24.6	0.969	6.8	0.268	69.9	2.752	–	5/16-24UNF	0.99
	7	0.276	12	0.472	8	0.315	76.2	3.000	–	3/8-24UNF	1.2
	7	0.276	27.8	1.094	8	0.315	76.2	3.000	–	3/8-24UNF	1.58
	7	0.276	12	0.472	8	0.315	76.2	3.000	–	3/8-24UNF	1.2
	7	0.276	27.8	1.094	8	0.315	76.2	3.000	–	3/8-24UNF	1.49
	7	0.276	12	0.472	8	0.315	76.2	3.000	M10×1.25	–	1.2
	7	0.276	27.8	1.094	8	0.315	76.2	3.000	M10×1.25	–	1.39
	7	0.276	12	0.472	8	0.315	76.2	3.000	–	3/8-24UNF	1.2
	7	0.276	27.8	1.094	8	0.315	76.2	3.000	–	3/8-24UNF	1.36
	7.5	0.295	31	1.220	8	0.315	84.2	3.315	–	3/8-24UNF	2.03
	7.5	0.295	31	1.220	8	0.315	84.2	3.315	M10×1.25	–	1.87
	7.5	0.295	34.1	1.343	8.5	0.335	92	3.622	–	3/8-24UNF	2.51
	7.5	0.295	34.1	1.343	8.5	0.335	92	3.622	M10×1.25	–	2.45
	9	0.354	34.1	1.343	8.5	0.335	97	3.819	–	3/8-24UNF	2.94
	9	0.354	34.1	1.343	8.5	0.335	97	3.819	M10×1.25	–	2.92
	9	0.354	37.3	1.469	8.5	0.335	102	4.016	M10×1.25	–	2.74
	9	0.354	37.3	1.469	8.5	0.335	102	4.016	–	3/8-24UNF	2.72

ER, RB
Cylindrical bore (with set screws), Cylindrical outside surface
d 12 ~ 60 mm

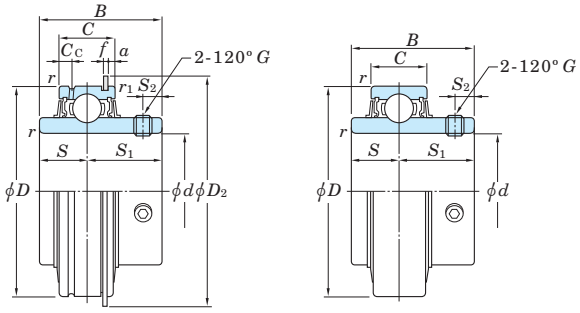

ER RB

Shaft Dia. mm	Shaft Dia. inch	Dimensions inch / mm					Basic Load Ratings kN		Factor	Bearing No.	
d		D	B	C	r (min.)	r_1 (min.)	C_r	C_{0r}	f_0	(ER)	(RB)
12										ER201	RB201
	1/2	1.850	1.220	0.630	0.024	0.020	12.8	6.65	13.2	ER201-8	RB201-8
15		47	31	16	0.6	0.5				ER202	RB202
	5/8									ER202-10	RB202-10
17										ER203	RB203
20	3/4	1.850	1.220	0.630	0.039	0.020	12.8	6.65	13.2	ER204-12	RB204-12
		47	31	16	1	0.5				ER204	RB204
	7/8									ER205-14	RB205-14
25	15/16	2.047	1.343	0.748	0.039	0.020	14.0	7.85	13.9	ER205-15	RB205-15
		52	34.1	19	1	0.5				ER205	RB205
	1									ER205-16	RB205-16
	1 1/8									ER206-18	RB206-18
30		2.441	1.500	0.866	0.039	0.020	19.5	11.3	13.9	ER206	RB206
	1 3/16	62	38.1	22	1	0.5				ER206-19	RB206-19
	1 1/4									ER206-20	RB206-20
	1 1/4									ER207-20	RB207-20
	1 5/16	2.835	1.689	0.945	0.043	0.020	25.7	15.4	13.9	ER207-21	RB207-21
35	1 3/8	72	42.9	24	1.1	0.5				ER207-22	RB207-22
										ER207	RB207
	1 7/16									ER207-23	RB207-23
	1 1/2	3.150	1.937	1.102	0.043	0.020	29.1	17.8	14.0	ER208-24	RB208-24
40	1 9/16	80	49.2	28	1.1	0.5				ER208-25	RB208-25
										ER208	RB208
	1 5/8									ER209-26	–
45	1 11/16	3.346	1.937	1.102	0.043	0.020	34.1	21.3	14.0	ER209-27	–
	1 3/4	85	49.2	28	1.1	0.5				ER209-28	–
										ER209	–
	1 7/8									ER210-30	–
50	1 15/16	3.543	2.031	1.102	0.043	0.020	35.1	23.3	14.4	ER210-31	–
		90	51.6	28	1.1	0.5				ER210	–
	2									ER210-32	–
	2									ER211-32	–
55	2 1/8	3.937	2.189	1.181	0.059	0.020	43.4	29.4	14.4	ER211-34	–
		100	55.6	30	1.5	0.5				ER211	–
	2 3/16									ER211-35	–
	2 1/4									ER212-36	–
60		4.331	2.563	1.260	0.059	0.020	52.4	36.2	14.4	ER212	–
	2 3/8	110	65.1	32	1.5	0.5				ER212-38	–
	2 7/16									ER212-39	–

Dimensions inch / mm							Set Screw Brg. Bore G		Mass kg	
S	S_1	S_2	C_c	a	f	D_2	mm	inch	(ER)	(RB)
							M6×0.75	–	0.27	0.27
							–	1/4-28UNF	0.27	0.27
0.500	0.720	0.197	0.157	0.094	0.042	2.067	M6×0.75	–	0.25	0.25
12.7	18.3	5	4	2.38	1.07	52.5	–	1/4-28UNF	0.25	0.25
							M6×0.75	–	0.24	0.24
0.500	0.720	0.197	0.157	0.094	0.042	2.067	–	1/4-28UNF	0.22	0.22
12.7	18.3	5	4	2.38	1.07	52.5	M6×0.75	–	0.22	0.22
							–	1/4-28UNF	0.3	0.29
0.563	0.780	0.217	0.197	0.094	0.042	2.272	–	1/4-28UNF	0.28	0.27
14.3	19.8	5.5	5	2.38	1.07	57.7	M6×0.75	–	0.27	0.26
							–	1/4-28UNF	0.27	0.26
							–	1/4-28UNF	0.41	0.4
0.626	0.874	0.236	0.217	0.125	0.065	2.657	M6×0.75	–	0.39	0.38
15.9	22.2	6	5.5	3.18	1.65	67.5	–	1/4-28UNF	0.39	0.38
							–	1/4-28UNF	0.37	0.36
							–	5/16-24UNF	0.69	0.68
							–	5/16-24UNF	0.66	0.65
0.689	1.000	0.256	0.217	0.125	0.065	3.087	–	5/16-24UNF	0.64	0.63
17.5	25.4	6.5	5.5	3.18	1.65	78.4	M8×1	–	0.63	0.62
							–	5/16-24UNF	0.61	0.6
0.748	1.189	0.315	0.236	0.125	0.065	3.402	–	5/16-24UNF	0.85	0.84
19	30.2	8	6	3.18	1.65	86.4	–	5/16-24UNF	0.82	0.81
							M8×1	–	0.81	0.78
							–	5/16-24UNF	1.0	–
0.748	1.189	0.315	0.236	0.125	0.065	3.598	–	5/16-24UNF	0.96	–
19	30.2	8	6	3.18	1.65	91.4	–	5/16-24UNF	0.92	–
							M8×1	–	0.90	–
							–	3/8-24UNF	1.05	–
0.748	1.283	0.354	0.295	0.125	0.095	3.791	–	3/8-24UNF	1.0	–
19	32.6	9	7.5	3.18	2.41	96.3	M10×1.25	–	0.98	–
							–	3/8-24UNF	0.96	–
							–	3/8-24UNF	1.56	–
0.874	1.315	0.354	0.295	0.125	0.095	4.185	–	3/8-24UNF	1.45	–
22.2	33.4	9	7.5	3.18	2.41	106.3	M10×1.25	–	1.41	–
							–	3/8-24UNF	1.39	–
							–	3/8-24UNF	2.02	–
1.000	1.563	0.413	0.295	0.125	0.095	4.583	M10×1.25	–	1.89	–
25.4	39.7	10.5	7.5	3.18	2.41	116.4	–	3/8-24UNF	1.87	–
							–	3/8-24UNF	1.8	–

H300X, H2300X
d_1 20 ~ (70) mm

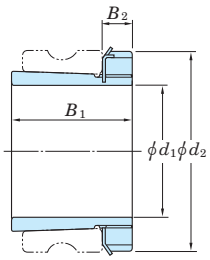

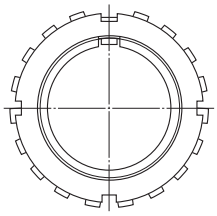

Shaft Dia. d_1 mm (H)	Shaft Dia. d_1 inch (HE)	Shaft Dia. d_1 inch (HS)	Dimensions inch / mm B_1	Dimensions inch / mm B_2	Dimensions inch / mm d_2	Adapter assembly No. (H)	Adapter assembly No. (HE)	Adapter assembly No. (HS)	Sleeve No. (H)	Sleeve No. (HE)	Sleeve No. (HS)
20	–	–	1.142	0.315	1.496	**H305X**	–	–	A305X	–	–
	3/4	–	29	8	38	–	**HE305X**	–	–	AE305X	–
20	–	–	1.378	0.315	1.496	**H2305X**	–	–	A2305X	–	–
	3/4	–	35	8	38	–	**HE2305X**	–	–	AE2305X	–
25	–	–	1.220	0.315	1.772	**H306X**	–	–	A306X	–	–
	1	–	31	8	45	–	**HE306X**	–	–	AE306X	–
25	–	–	1.496	0.315	1.772	**H2306X**	–	–	A2306X	–	–
	1	–	38	8	45	–	**HE2306X**	–	–	AE2306X	–
30	–	–	1.378	0.354	2.047	**H307X**	–	–	A307X	–	–
	–	1 1/8	35	9	52	–	–	**HS307X**	–	–	AS307X
30	–	–	1.693	0.354	2.047	**H2307X**	–	–	A2307X	–	–
	–	1 1/8	43	9	52	–	–	**HS2307X**	–	–	AS2307X
35	–	–	1.417	0.394	2.283	**H308X**	–	–	A308X	–	–
	1 1/4	–	36	10	58	–	**HE308X**	–	–	AE308X	–
	–	1 3/8				–	–	**HS308X**	–	–	AS308X
35	–	–	1.811	0.394	2.283	**H2308X**	–	–	A2308X	–	–
	1 1/4	–	46	10	58	–	**HE2308X**	–	–	AE2308X	–
	–	1 3/8				–	–	**HS2308X**	–	–	AS2308X
40	–	–	1.535	0.433	2.559	**H309X**	–	–	A309X	–	–
	1 1/2	–	39	11	65	–	**HE309X**	–	–	AE309X	–
	–	1 5/8				–	–	**HS309X**	–	–	AS309X
40	–	–	1.969	0.433	2.559	**H2309X**	–	–	A2309X	–	–
	1 1/2	–	50	11	65	–	**HE2309X**	–	–	AE2309X	–
	–	1 5/8				–	–	**HS2309X**	–	–	AS2309X
45	–	–	1.654	0.472	2.756	**H310X**	–	–	A310X	–	–
	1 3/4	–	42	12	70	–	**HE310X**	–	–	AE310X	–
45	–	–	2.165	0.472	2.756	**H2310X**	–	–	A2310X	–	–
	1 3/4	–	55	12	70	–	**HE2310X**	–		AE2310X	–
50	–	–	1.772	0.472	2.953	**H311X**	–	–	A311X	–	–
	2	–	45	12	75	–	**HE311X**	–	–	AE311X	–
	–	1 7/8				–	–	**HS311X**	–	–	AS311X
50	–	–	2.323	0.472	2.953	**H2311X**	–	–	A2311X	–	–
	2	–	59	12	75	–	**HE2311X**	–	–	AE2311X	–
	–	1 7/8				–	–	**HS2311X**	–	–	AS2311X
55	–	–	1.850	0.512	3.150	**H312X**	–	–	A312X	–	–
	–	2 1/8	47	13	80	–	–	**HS312X**	–	–	AS312X
55	–	–	2.441	0.512	3.150	**H2312X**	–	–	A2312X	–	–
	–	2 1/8	62	13	80	–	–	**HS2312X**	–	–	AS2312X
60	–	–	1.969	0.551	3.346	**H313X**	–	–	A313X	–	–
	2 1/4	–	50	14	85	–	**HE313X**	–	–	AE313X	–
	–	2 3/8				–	–	**HS313X**	–	–	AS313X
60	–	–	2.559	0.551	3.346	**H2313X**	–	–	A2313X	–	–
	2 1/4	–	65	14	85	–	**HE2313X**	–	–	AE2313X	–
	–	2 3/8				–	–	**HS2313X**	–	–	AS2313X
65	–	–	2.165	0.591	3.858	**H315X**	–	–	A315X	–	–
	2 1/2	–	55	15	98	–	**HE315X**	–	–	AE315X	–
65	–	–	2.874	0.591	3.858	**H2315X**	–	–	A2315X	–	–
	2 1/2	–	73	15	98	–	**HE2315X**	–	–	AE2315X	–
70	–	–	2.323	0.669	4.134	**H316X**	–	–	A316X	–	–
	2 3/4	–	59	17	105	–	**HE316X**	–	–	AE316X	–

	Lock Nut No.	Washer No.	Mass kg		
			(H)	(HE)	(HS)
	AN05	AW05X	0.075	–	–
	AN05	AW05X	–	0.08	–
	AN05	AW05X	0.095	–	–
	AN05	AW05X	–	0.085	–
	AN06	AW06X	0.11	–	–
	AN06	AW06X	–	0.105	–
	AN06	AW06X	0.13	–	–
	AN06	AW06X	–	0.12	–
	AN07	AW07X	0.14	–	–
	AN07	AW07X	–	–	0.15
	AN07	AW07X	0.17	–	–
	AN07	AW07X	–	–	0.19
	AN08	AW08X	0.19	–	–
	AN08	AW08X	–	0.23	–
	AN08	AW08X	–	–	0.19
	AN08	AW08X	0.22	–	–
	AN08	AW08X	–	0.28	–
	AN08	AW08X	–	–	0.22
	AN09	AW09X	0.25	–	–
	AN09	AW09X	–	0.28	–
	AN09	AW09X	–	–	0.23
	AN09	AW09X	0.28	–	–
	AN09	AW09X	–	0.32	–
	AN09	AW09X	–	–	0.25
	AN10	AW10X	0.30	–	–
	AN10	AW10X	–	0.31	–
	AN10	AW10X	0.36	–	–
	AN10	AW10X	–	0.37	–
	AN11	AW11X	0.35	–	–
	AN11	AW11X	–	0.33	–
	AN11	AW11X	–	–	0.41
	AN11	AW11X	0.42	–	–
	AN11	AW11X	–	0.40	–
	AN11	AW11X	–	–	0.50
	AN12	AW12X	0.43	–	–
	AN12	AW12X	–	–	0.40
	AN12	AW12X	0.48	–	–
	AN12	AW12X	–	–	0.52
	AN13	AW13X	0.46	–	–
	AN13	AW13X	–	0.56	–
	AN13	AW13X	–	–	0.45
	AN13	AW13X	0.56	–	–
	AN13	AW13X	–	0.69	–
	AN13	AW13X	–	–	0.55
	AN15	AW15X	0.83	–	–
	AN15	AW15X	–	0.89	–
	AN15	AW15X	1.05	–	–
	AN15	AW15X	–	1.15	–
	AN16	AW16X	1.05	–	–
	AN16	AW16X	–	1.05	–

H300X, H2300X
d_1 (70) ~ 125 mm

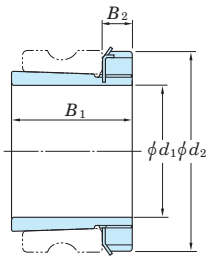

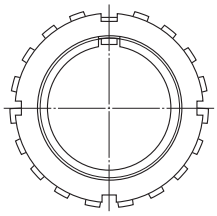

Shaft Dia. d_1 mm (H)	inch (HE)	inch (HS)	Dimensions inch / mm B_1	B_2	d_2	Adapter assembly No. (H)	(HE)	(HS)	Sleeve No. (H)	(HE)	(HS)
70	–	–	3.071	0.669	4.134	**H2316X**	–	–	A2316X	–	–
	2 3/4	–	78	17	105	–	**HE2316X**	–	–	AE2316X	–
75	–	–	2.480	0.709	4.331	**H317X**	–	–	A317X	–	–
	3	–	63	18	110	–	**HE317X**	–	–	AE317X	–
75	–	–	3.228	0.709	4.331	**H2317X**	–	–	A2317X	–	–
	3	–	82	18	110	–	**HE2317X**	–	–	AE2317X	–
80	–	–	2.559	0.709	4.724	**H318X**	–	–	A318X	–	–
	–	–	65	18	120						
80	–	–	3.386	0.709	4.724	**H2318X**	–	–	A2318X	–	–
	–	–	86	18	120						
85	–	–	3.543	0.748	4.921	**H2319X**	–	–	A2319X	–	–
	3 1/4	–	90	19	125	–	**HE2319X**	–	–	AE2319X	–
90	–	–	3.819	0.787	5.118	**H2320X**	–	–	A2320X	–	–
	3 1/2	–	97	20	130	–	**HE2320X**	–	–	AE2320X	–
100	–	–	4.134	0.827	5.709	**H2322X**	–	–	A2322X	–	–
	4	–	105	21	145	–	**HE2322X**	–	–	AE2322X	–
110	–	–	4.409	0.866	6.102	**H2324**	–	–	A2324	–	–
			112	22	155						
115	–	–	4.764	0.906	6.496	**H2326**	–	–	A2326	–	–
	4 1/2	–	121	23	165	–	**HE2326**	–	–	AE2326	–
125	–	–	5.157	0.945	7.087	**H2328**	–	–	A2328	–	–
			131	24	180						

	Lock Nut No.	Washer No.	Mass kg (H)	(HE)	(HS)
	AN16	AW16X	1.3	–	–
	AN16	AW16X	–	1.3	–
	AN17	AW17X	1.2	–	–
	AN17	AW17X	–	1.1	–
	AN17	AW17X	1.45	–	–
	AN17	AW17X	–	1.35	–
	AN18	AW18X	1.4	–	–
	AN18	AW18X	1.7	–	–
	AN19	AW19X	1.95	–	–
	AN19	AW19X	–	2.15	–
	AN20	AW20X	2.2	–	–
	AN20	AW20X	–	2.3	–
	AN22	AW22X	2.75	–	–
	AN22	AW22X	–	2.55	–
	AN24	AW24	3.2	–	–
	AN26	AW26	4.6	–	–
	AN26	AW26	–	4.7	–
	AN28	AW28	5.5	–	–

16 Parts and accessories

16.1 Part No. of pressed steel covers

Table 16.1 Part No. of pressed steel cover for UC type bearing

Bearing No.	Shaft dia. (mm)	Pressed steel cover No.	
		Open ends type	Closed end type
UC201	12	C– 4×12	D– 4
UC202	15	C– 4×15	D– 4
UC203	17	C– 4×17	D– 4
UC204	20	C– 4×20	D– 4
UC205	25	C– 5×25	D– 5
UC206	30	C– 6×30	D– 6
UC207	35	C– 7×35	D– 7
UC208	40	C– 8×40	D– 8
UC209	45	C– 9×45	D– 9
UC210	50	C–10×50	D–10
UC211	55	C–11×55	D–11
UC212	60	C–12×60	D–12
UC213	65	C–13×65	D–13
UC214	70	C–14×70	D–14
UC215	75	C–15×75	D–15
UC216	80	C–16×80	D–16
UC217	85	C–17×85	D–17
UC218	90	C–18×90	D–18
UCX05	25	C– 6×25	D– 6
UCX06	30	C– 7×30	D– 7
UCX07	35	C– 8×35	D– 8
UCX08	40	C– 9×40	D– 9
UCX09	45	C–10×45	D–10
UCX10	50	C–11×50	D–11
UCX11	55	C–12×55	D–12
UCX12	60	C–13×60	D–13
UCX13	65	C–14×65	D–14
UCX14	70	C–15×70	D–15
UCX15	75	C–16×75	D–16
UCX16	80	C–17×80	D–17
UCX17	85	C–18×85	D–18

Remark In the Part No. of the pressed steel covers for shouldered shaft, shaft diameter follows the basic code of the cover. For example, Part No. of the cover for a shaft with 30 mm diameter for UC206 is C–6×30.

Table 16.2 Part No. of pressed steel cover for UK type bearing

Bearing No.	Shaft dia. (mm)	Pressed steel cover No.	
		Open ends type	Closed end type
–			
–			
–			
–			
UK205	20	C– 5×20	D– 5
UK206	25	C– 6×25	D– 6
UK207	30	C– 7×30	D– 7
UK208	35	C– 8×35	D– 8
UK209	40	C– 9×40	D– 9
UK210	45	C–10×45	D–10
UK211	50	C–11×50	D–11
UK212	55	C–12×55	D–12
UK213	60	C–13×60	D–13
–			
UK215	65	C–15×65	D–15
UK216	70	C–16×70	D–16
UK217	75	C–17×75	D–17
UK218	80	C–18×80	D–18
UKX05	20	C– 6×20	D– 6
UKX06	25	C– 7×25	D– 7
UKX07	30	C– 8×30	D– 8
UKX08	35	C– 9×35	D– 9
UKX09	40	C–10×40	D–10
UKX10	45	C–11×45	D–11
UKX11	50	C–12×50	D–12
UKX12	55	C–13×55	D–13
UKX13	60	C–14×60	D–14
–			
UKX15	65	C–16×65	D–16
UKX16	70	C–17×70	D–17
UKX17	75	C–18×75	D–18

16.2 Part No. of cast iron covers

Table 16.3 Part No. of cast iron cover for UC type bearing

Bearing No.	Shaft dia. (mm)	Cast iron cover No.		Mounting bolt (reference)
		Open ends type	Closed end type	
UC204	20	204FC×20 (204FC3×20)[1]	204FD (204FD3)[1]	M3 (M4)
UC205	25	205FC×25 (205FC3×25)[1]	205FD (205FD3)[1]	M3 (M4)
UC206	30	206FC×30	206FD	M4
UC207	35	207FC×35	207FD	M4
UC208	40	208FC×40	208FD	
UC209	45	209FC×45	209FD	
UC210	50	210FC×50	210FD	M4
UC211	55	211FC×55	211FD	
UC212	60	212FC×60	212FD	
UC213	65	213FC×65	213FD	M4
UC214	70	214FC×70	214FD	
UC215	75	215FC×75	215FD	
UC216	80	216FC×80	216FD	M5
UC217	85	217FC×85	217FD	
UC218	90	218FC×90	218FD	
UCX18	90	X18C×90 (X18C3×90)[2]	X18D (X18D3)[2]	M5
UCX20	100	X20C×100 (X20C3×100)[2]	X20D (X20D3)[2]	
UC305	25	305C×25	305D	M4
UC306	30	306C×30	306D	
UC307	35	307C×35	307D	
UC308	40	308C×40	308D	M5
UC309	45	309C×45	309D	
UC310	50	310C×50	310D	
UC311	55	311C×55	311D	M5
UC312	60	312C×60	312D	
UC313	65	313C×65	313D	
UC314	70	314C×70	314D	M5
UC315	75	315C×75	315D	
UC316	80	316C×80	316D	
UC317	85	317C×85	317D	M5
UC318	90	318C×90	318D	
UC319	95	319C×95	319D	
UC320	100	320C×100	320D	M5
UC321	105	321C×105	321D	
UC322	110	322C×110	322D	
UC324	120	324C×120	324D	M5
UC326	130	326C×130	326D	M8
UC328	140	328C×140	328D	

Table 16.4 Part No. of cast iron cover for UK type bearing

Bearing No.	Shaft dia. (mm)	Cast iron cover No.		Mounting bolt (reference)
		Open ends type	Closed end type	
–				
UK205	20	205FC×20 (205FC3×20)[1]	205FD (205FD3)[1]	M3 (M4)
UK206	25	206FC×25	206FD	M4
UK207	30	207FC×30	207FD	M4
UK208	35	208FC×35	208FD	
UK209	40	209FC×40	209FD	
UK210	45	210FC×45	210FD	M4
UK211	50	211FC×50	211FD	
UK212	55	212FC×55	212FD	
UK213	60	213FC×60	213FD	M4
–				
UK215	65	215FC×65	215FD	
UK216	70	216FC×70	216FD	M5
UK217	75	217FC×75	217FD	
UK218	80	218FC×80	218FD	
UKX18	80	X18C×80 (X18C3×80)[2]	X18D (X18D3)[2]	M5
UKX20	90	X20C×90 (X20C3×90)[2]	X20D (X20D3)[2]	
UK305	20	305C×20	305D	M4
UK306	25	306C×25	306D	
UK307	30	307C×30	307D	
UK308	35	308C×35	308D	M5
UK309	40	309C×40	309D	
UK310	45	310C×45	310D	
UK311	50	311C×50	311D	M5
UK312	55	312C×55	312D	
UK313	60	313C×60	313D	
–				
UK315	65	315C×65	315D	M5
UK316	70	316C×70	316D	
UK317	75	317C×75	317D	M5
UK318	80	318C×80	318D	
UK319	85	319C×85	319D	
UK320	90	320C×90	320D	M5
–				
UK322	100	322C×100	322D	
UK324	110	324C×110	324D	M5
UK326	115	326C×115	326D	M8
UK328	125	328C×125	328D	

Note 1) Items in parentheses are applicable to the pillow block type (P), square-flanged type (F), rhombic-flanged type (FL), and the take-up type (T) bearings, and can be mounted to housings with three hexagon socket head cap screws (use four to mount other items).
2) Items in parentheses are applicable to the round-flanged type with joint (FC), and can be mounted to housings with three hexagon socket head cap screws (use four to mount other items).

Remark In the nominal No. of the cast iron covers for shouldered shaft, shaft diameter follows the basic code of the cover. For example, Part No. of the cover for a shaft with 60 mm diameter for UC210 is 210FC×60.

16.3 Nominal number and dimensions of grease nipples and reducing socket

Table 16.5 Nominal number and dimensions of grease nipple

(1) Nominal number and dimensions of A type grease nipple

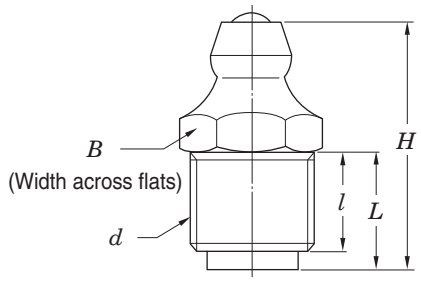

Unit : mm

Nominal grease nipple No.	Nominal screw code d	B	H	L	l
A–1/4-28UNF	1/4-28UNF	7	13.5	5.4	4
A–PT1/8	PT1/8	10	20	9.5	8

(2) Nominal number and dimensions of B and C type grease nipples

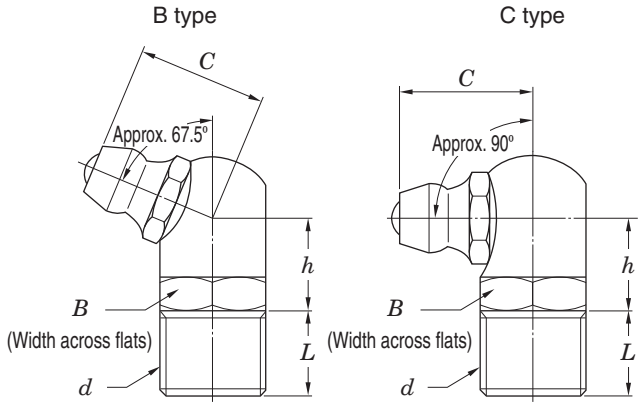

Unit : mm

Nominal grease nipple No.	Nominal screw code d	Type	B	C	h	L
B–1/4-28UNF C–1/4-28UNF	1/4-28UNF	B C	8	9.5	6.5	5
B–PT1/8 C–PT1/8	PT1/8	B C	10	12.5	8.5	8

Table 16.6 Nominal number and dimensions of reducing socket code

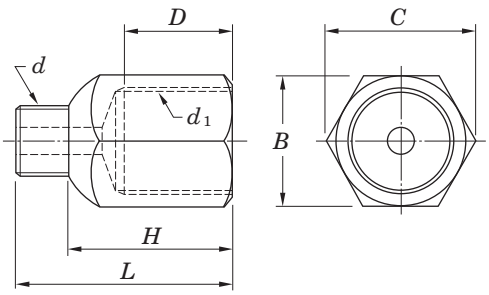

Unit : mm

Nominal No. of reducing socket	Nominal male thread code d	Nominal female thread code d_1	B	C	D	H	L
1/4-28UNF–PT1/8 1/4-28UNF–PF1/8	1/4-28UNF	PT1/8 PF1/8	12	13.8	10	15	20
1/4-28UNF–PT1/4 1/4-28UNF–PF1/4	1/4-28UNF	PT1/4 PF1/4	17	19.6	11	17	22
PT1/8–PT1/4 PT1/8–PF1/4	PT1/8	PT1/4 PF1/4	17	19.6	11	19	26

16.4 Nominal number and dimensions of Allen key wrench

Table 16.7 Nominal number and dimensions of Allen key wrench

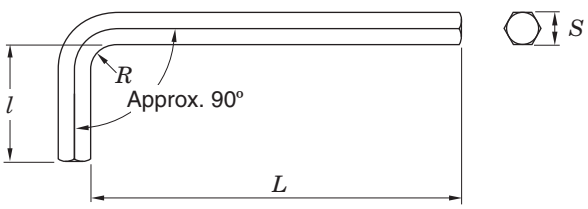

Unit : mm

Nominal No. of Allen key wrench	S	L (Approx.)	l (Approx.)	R (Approx.)	Applicable set screw
2.5	2.5	56	18	2.5	M5
3	3	63	20	3	M6
4	4	70	25	4	M8
5	5	80	28	5	M10
6	6	90	32	6	M12, M14
8	8	100	36	8	M16, M18
10	10	112	40	10	M20

17 Example of use

Koyo Ball Bearing units are used in varied equipment, and their performance contributes to technical advantages, automation, and energy-saving of equipment.

Automatic warehouse system

Many ball bearings are used in automatic warehouse systems for automation and energy-saving of the systems.

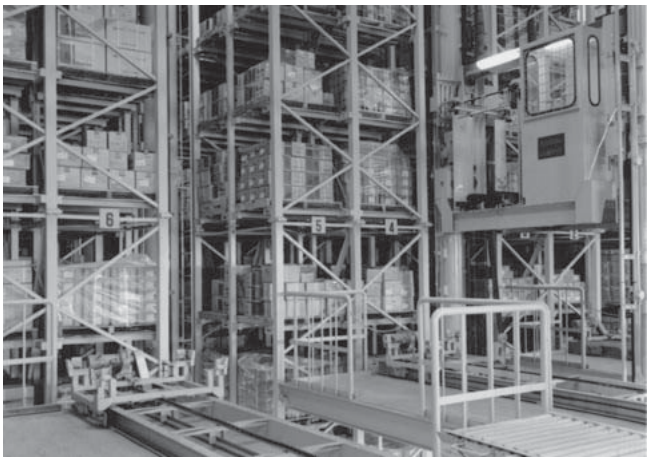

Automatic warehouse system

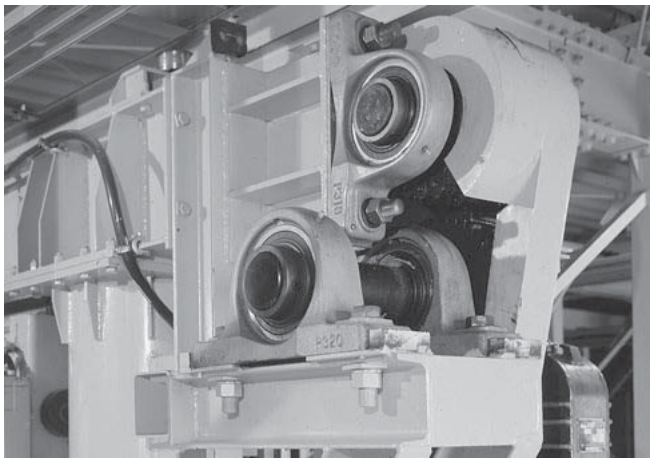

Mast driving system

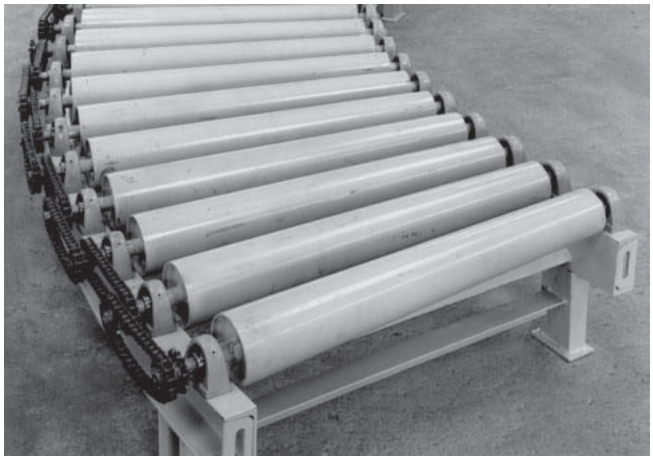

Conveyor

Delivery center

Koyo Ball bearings of various types including pillow block type, flange type, take-up type are used in conveyors of delivery centers.

Belt conveyor

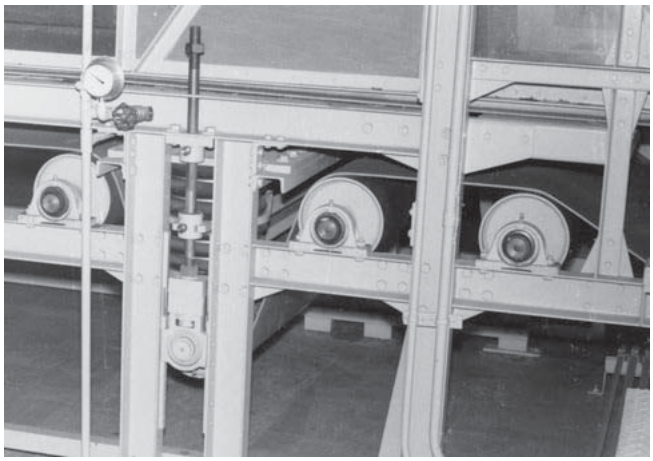

Belt conveyor driving system

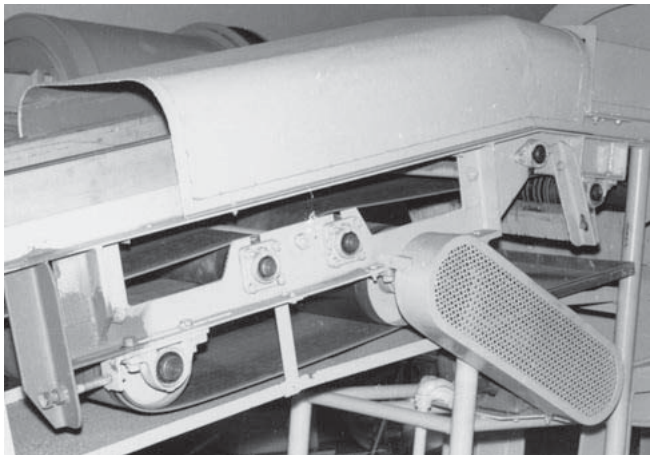

Belt conveyor driving system

Soft drink plant

Since soft drink manufacturing facilities are frequently cleaned for hygiene control, covered unit, “compact” series unit, and stainless-series unit are suitable for them.

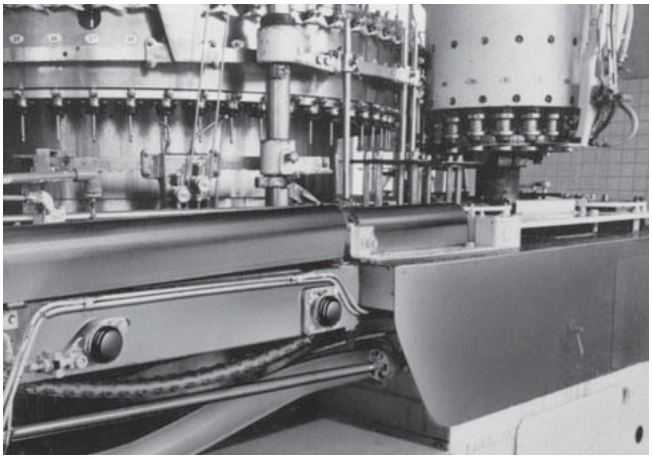

Bottle filling line conveyor

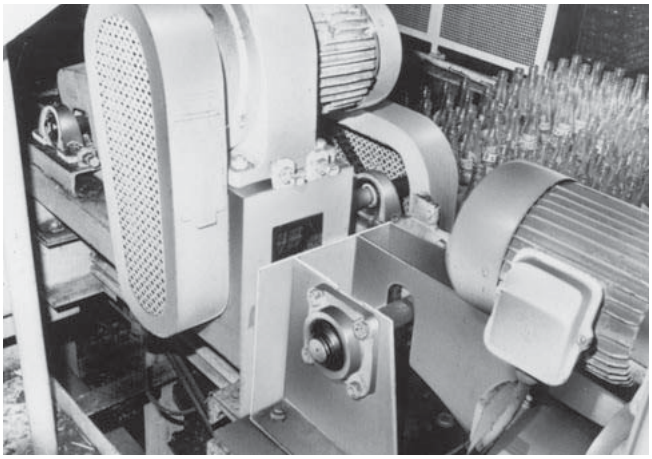

Pallet driving system

Noodle manufacturing plant

Triple-lip seal units or covered units are suitable for locations dusted with a great deal of noodle flour.

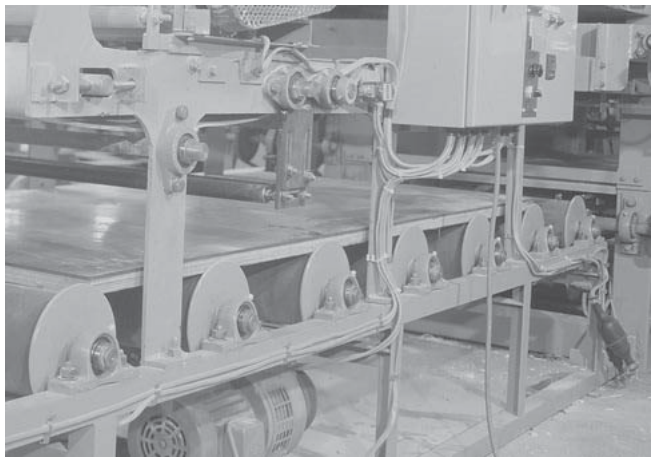

Feeding system

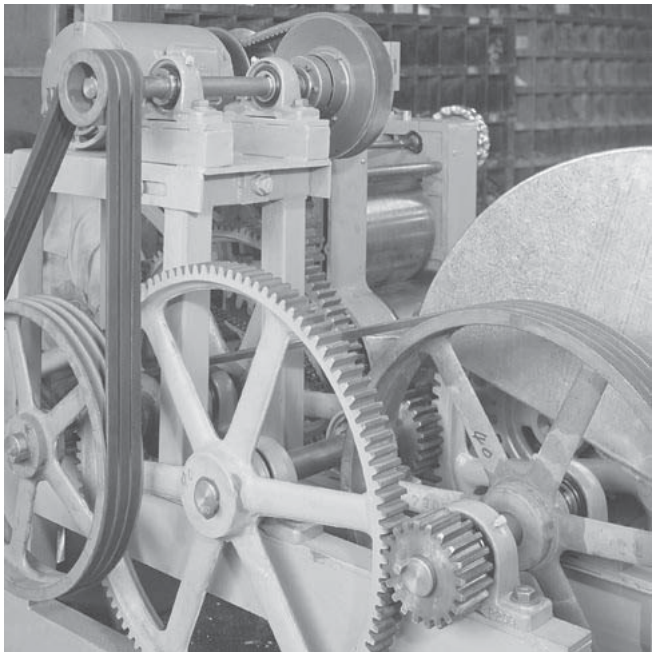

Noodle manufacturing machine driving system

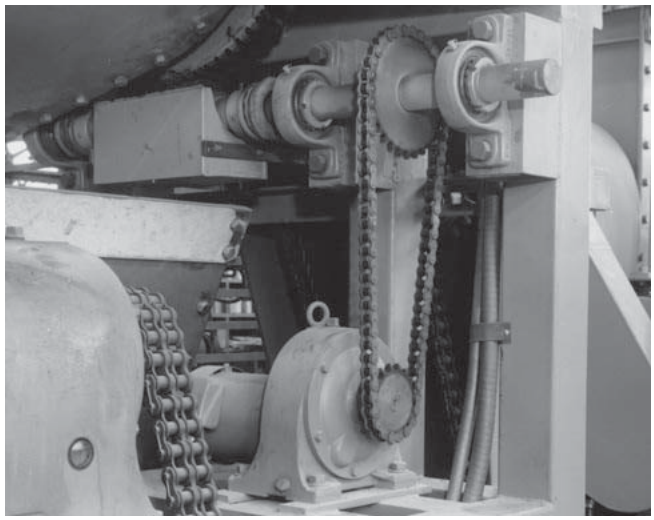

Mixer driving system

Tea manufacturing plant

Koyo Ball Bearings contribute to the automation of tea manufacturing lines and downsizing of tea manufacturing machines.

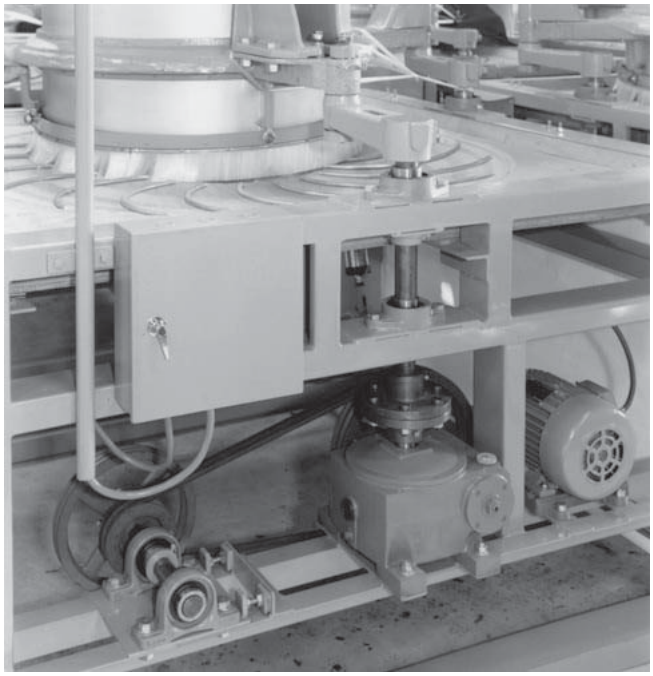

Tea processor driving system

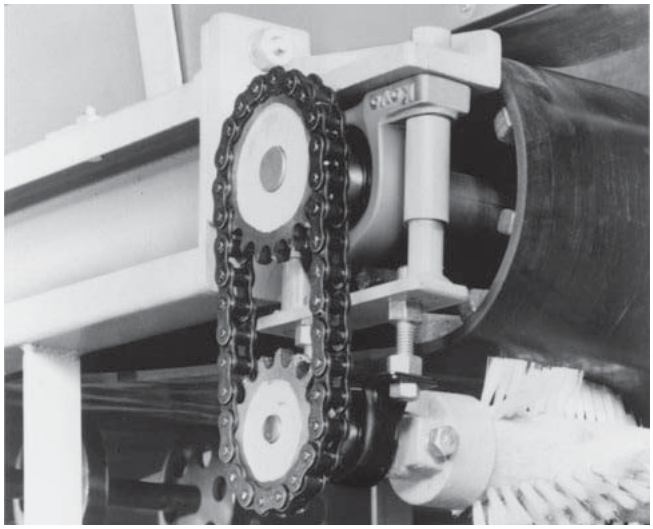

Conveyor driving system

Packing machine

Koyo Ball Bearings, used in transmission units, cam shafts, and conveyors, contribute to high-efficiency and automation of packing lines.

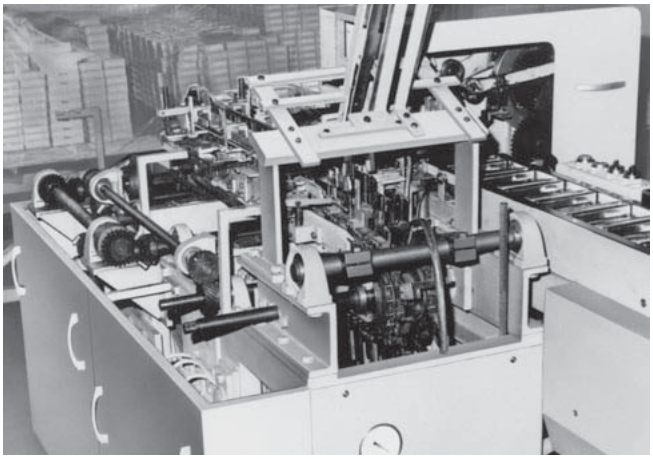

Packing machine

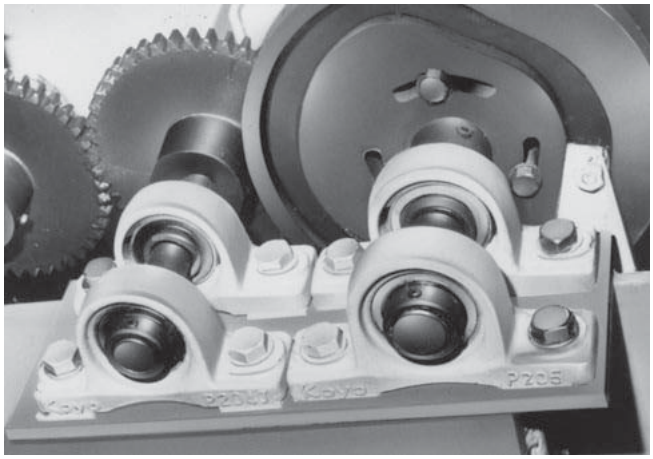

Cam shaft

Textile machine

Take-up units are suitable for locations where adjustment of distance between shaft axes is required, while hanger units are suitable for locations where the shaft must be hung because of the structure of the machine.

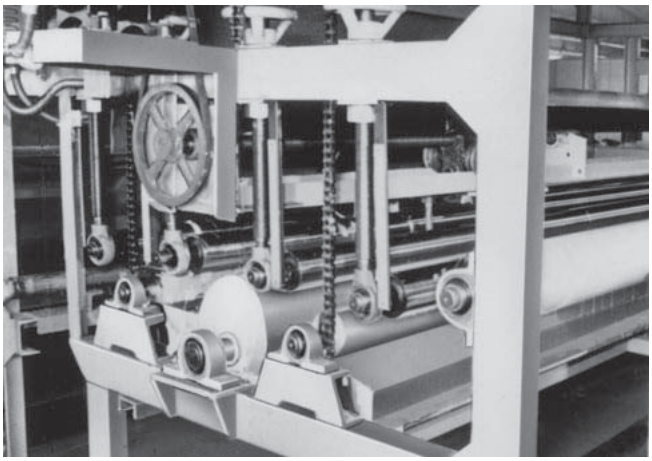

Carpet pasting system

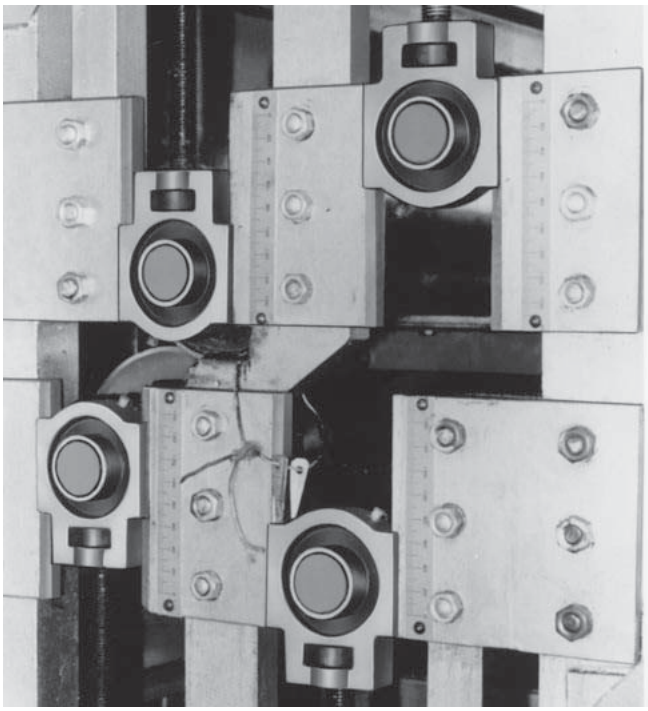

Carpet feeding shaft

Heat treatment system

The heat resistant unit is used for applications at a high temperature.

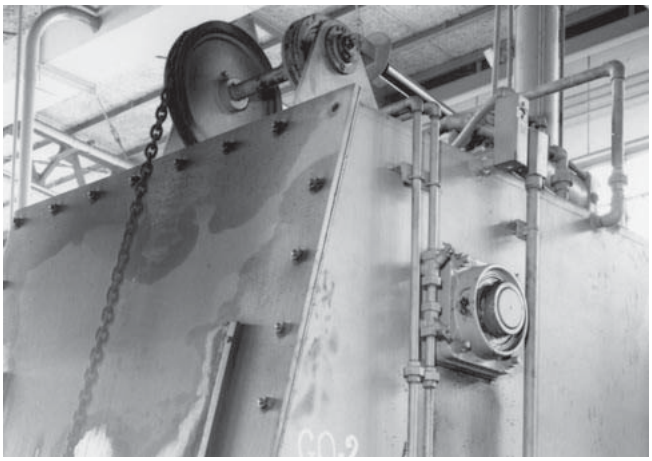

Carburizing furnace

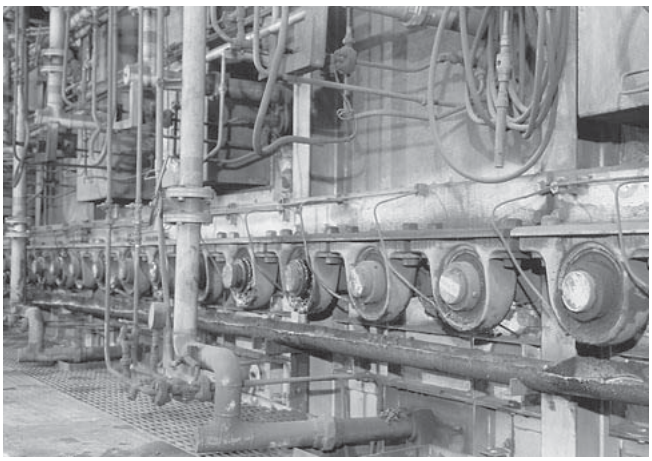

Heat treatment furnace

Agricultural machine

Koyo Ball Bearings contribute to downsizing and high-performance of agricultural machines. Triple-lip seal units or covered units are suitable for locations where are subject to a great deal of mud water and dusts.

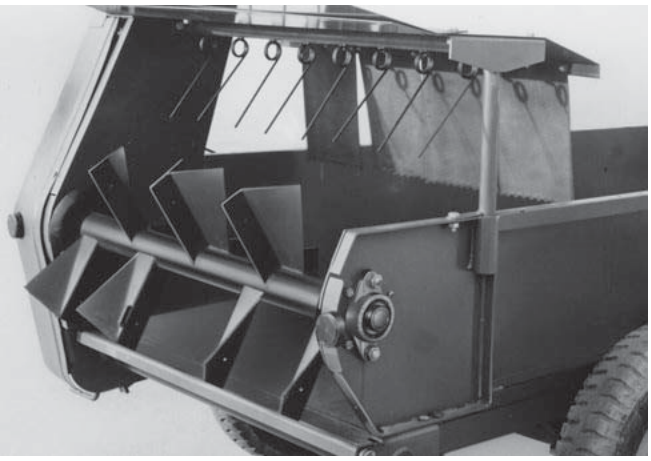

Small wagon

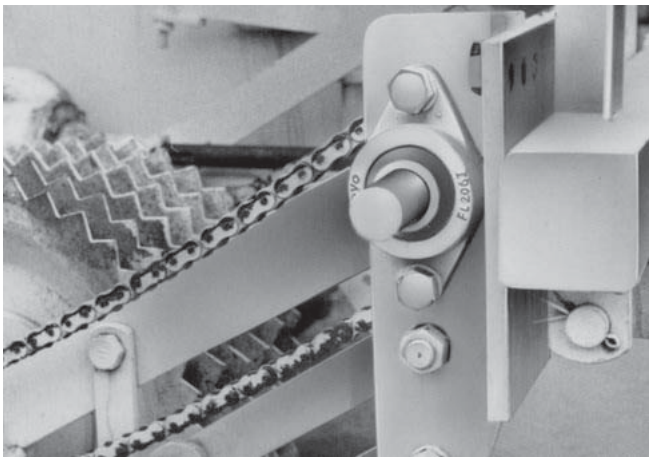

Beat harvester power transmission system

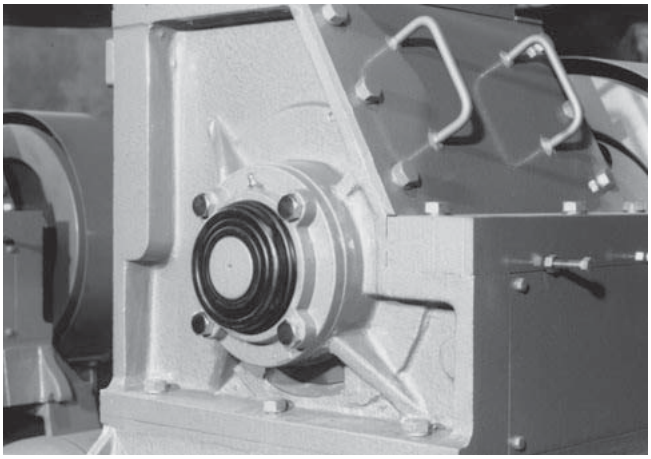

Grain mill

Construction machinery

Koyo Ball Bearings contribute to high-performance and longer service life of construction machinery used under severe environment.

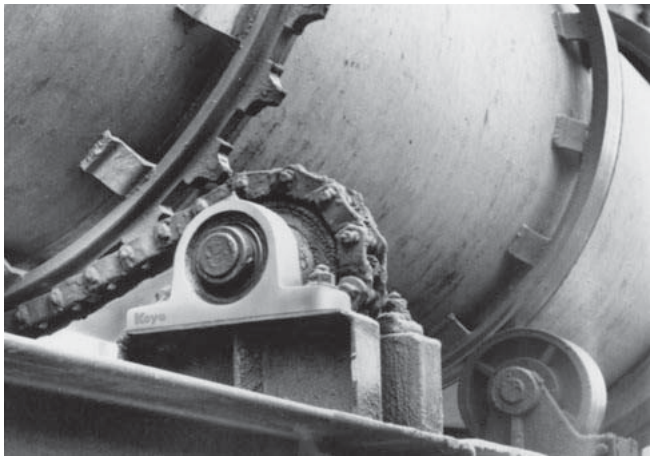

Concrete mixer

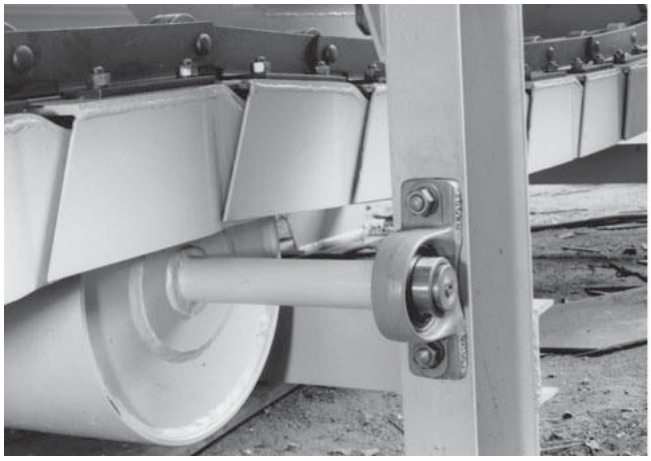

Conveyor

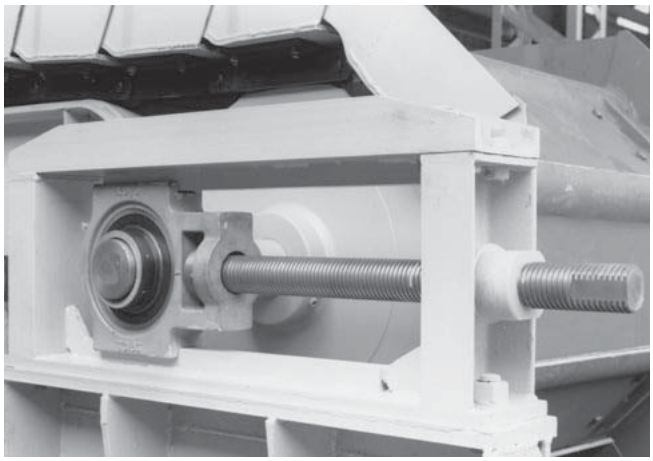

Conveyor

Other applications

Ball Bearings of various types appropriate for applications and specifications are used.

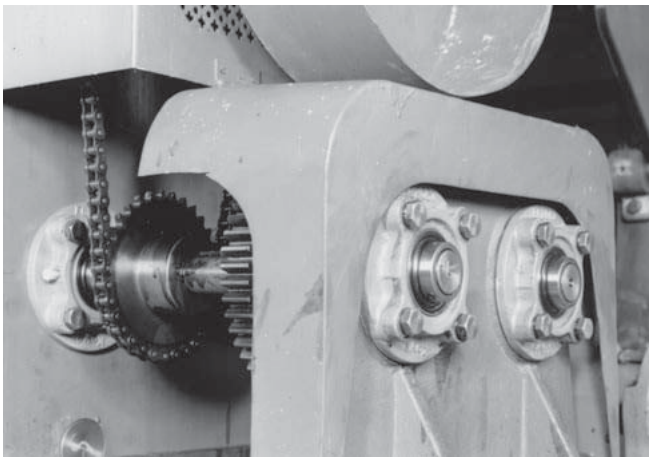

(Round-flanged type with spigot joint)

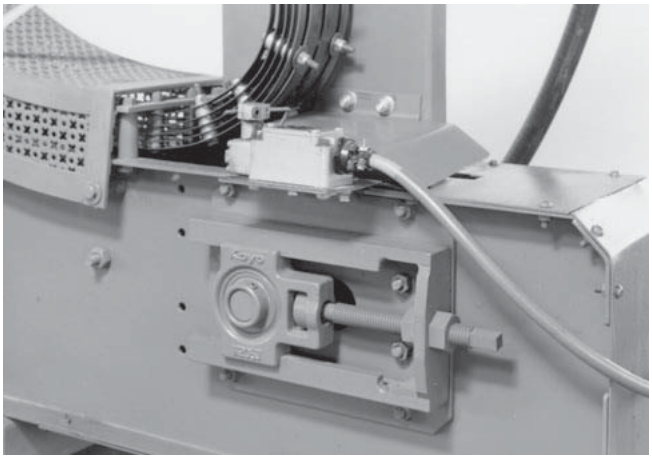

(Take-up type unit)

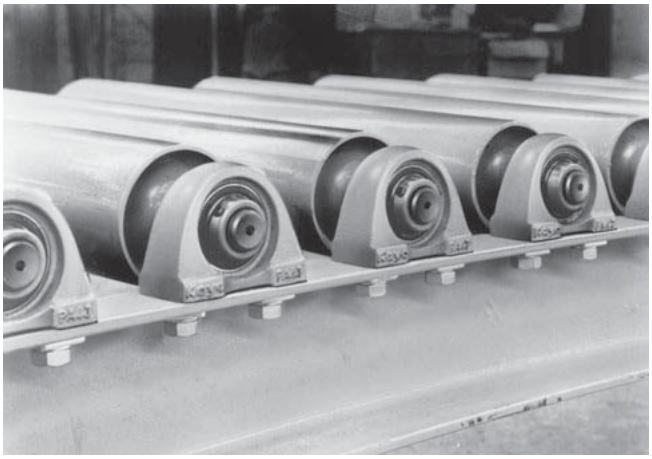

(Pillow block type unit)

Appendix table (contents)

Appendix table 1 Simplified chart of ball bearing unit combinations

Type	Housing for units	Ball bearing for units						
		Cylindrical bore (with set screws)				Tapered bore (with adapter)		
		UC200	UCX00	UC300	Stainless steel UC200S6	UK200	UKX00	UK300
Pillow block type	P200, PX00, P300 PK200 P200SC, P300SC	UCP200 UCP200SC	UCPX00	UCP300 UCP300SC		UKP200 UKP200SC	UKPX00	UKP300 UKP300SC
	IP200, IP300 PA200, SPA200H1	UCIP200 UCPA200		UCIP300	UCSPA200H1S6	UKIP200		UKIP300
	PH200 LP200	UCPH200						
	P000, SP000 SP200H1 PP200				UCSP200H1S6			
Square-flanged type	F200, FX00, F300 F200E, FX00E SF200H1 NF200 FS300	UCF200 UCF200E	UCFX00 UCFX00E	UCF300 UCFS300	UCSF200H1S6	UKF200	UKFX00	UKF300 UKFS300
Oval flange type	FL200, FLX00, FL300 FL200E FA200	UCFL200 UCFL200E UCFA200	UCFLX00	UCFL300		UKFL200	UKFLX00	UKFL300
	FB200 LF200	UCFB200						
	FL000, SFL000 NFL200 SFL200H1				UCSFL200H1S6			
Round-flanged type with spigot joint	FC200, FCX00, FCX00E	UCFC200	UCFCX00 UCFCX00E			UKFC200	UKFCX00	
Pressed steel flange type	PF200 PFL200							
Take-up type	T200, TX00, T300 T200E, TX00E ST200H1 T200+H	UCT200 UCT200E UCTH200	UCTX00 UCTX200E	UCT300	UCST200H1S6	UKT200	UKTX00	UKT300
	TL200 TU200, TU300	UCTL200 UCTU200		UCTU300		(UKTL200) (UKTU200)		(UKTU300)
	PTH200 NPTH200							
Cartridge type	C200, CX00, C300	UCC200	UCCX00	UCC300		UKC200	UKCX00	UKC300
Hanger type	HA200	UCHA200						

Ball bearing for units					Housing for units	Type
Cylindrical bore (with set screws)			Cylindrical bore (with eccentric locking collar)			
"Compact" series SU000	Stainless steel SU000S6	SB200	SA200	NA200		
				NAP200 NAPK200	P200, PX00, P300 PK200 P200SC, P300SC	Pillow block type
					IP200, IP300 PA200, SPA200H1	
		BLP200	ALP200		PH200 LP200	
UP000	USP000S6	SBPP200	SAPP200		P000, SP000 SP200H1 PP200	
				NANF200	F200, FX00, F300 F200E, FX00E SF200H1 NF200 FS300	Square-flanged type
					FL200, FLX00, FL300 FL200E FA200	Oval flange type
		BLF200	ALF200		FB200 LF200	
UFL000	USFL000S6			NANFL200	FL000, SFL000 NFL200 SFL200H1	
				NAFC200	FC200, FCX00, FCX00E	Round-flanged type with spigot joint
		SBPF200 SBPFL200	SAPF200 SAPFL200		PF200 PFL200	Pressed steel flange type
				NAT200	T200, TX00, T300 T200E, TX00E ST200H1 T200+H	Take-up type
					TL200 TU200, TU300	
		SBPTH200 SBNPTH200			PTH200 NPTH200	
				NAC200	C200, CX00, C300	Cartridge type
					HA200	Hanger type

Appendix table 2 Tightening torques of mounting bolts for housing and cast iron cover

(1) Tightening torques of mounting bolts for housing (recommended)

Nominal size of screws	Tightening torques N · m
M 6	2.6– 4.7
M 8	6 – 10
M10	12 – 21
M12	21 – 37
M14	34 – 60
M16	53 – 93
M18	77 – 137
M20	104 – 186
M22	143 – 256
M27	266 – 478
M30	360 – 645
M33	494 – 886
M36	631 –1 130

(2) Tightening torques of mounting bolts for cast iron cover (recommended)

Nominal size of screws	Tightening torques, N · m	Part No. of applicable cast iron covers (reference)		
		200 series	X00 series	300 series
M3	0.3– 0.6	204, 205	–	–
M4	0.8– 1.4	204FC3 (FD3), 205FC3 (FD3), 206–215	–	305–307
M5	1.5– 2.8	216–218	X18, X20	308–324
M8	6 –10	–	–	326, 328

Appendix table 3 Tightening torques of set screws for inner ring and eccentric locking collar

(1) Tightening torques of set screws for inner ring and eccentric locking collar (metric series) (recommended)

Nominal size of screws	Tightening torques, N · m	Part No. of applicable bearings						
		UC200, RB200	UCX00	UC300	NA200	SB200	SU000	ER200
M 3X0.35	0.7						000, 001	
M 4X0.5	1.8	–				–	002, 003	
M 5X0.5	3	201X–203X	–	–		201–203	004–006	–
M 6X0.75	4	201–206	X05	305, 306	–	204–207	–	201–206
M 6X1	4	–	–	–	204, 205	–		
M 8X1	8.5	207–209	X06–X08	307	206–210	208		207–209
M10X1.25	17.5	210–212	X09–X11	308, 309	211, 212	–		210–212
M12X1.5	28	213–218	X12–X17	310–314	–			–
M14X1.5	35	–	X18	315, 316				
M16X1.5	56		X20	317–319				
M18X1.5	62		–	320–324				
M20X1.5	83			326, 328				

(2) Tightening torques of set screws for inner ring and eccentric locking collar (inch series) (recommended)

Nominal size of screws	Tightening torques, N · m	Part No. of applicable bearings		
		UC200, ER200, RB200	UCX00	SB200
10-32UNF	3	–	–	201, 202
1/4-28UNF	4	201–206	X05	204–207
5/16-24UNF	8.5	207–209	X06–X08	208
3/8-24UNF	17.5	210–212	X09–X11	–
1/2-20UNF	28	213–218	X12–X18	
5/8-18UNF	56	–	X20	

Appendix table 4 Tightening torques of adapter lock nuts (reference)

Bore code	Tightening torques, N · m		
	UK200	UKX00	UK300
05	24.5	34	29
06	29	39	44
07	39	49	59
08	49	73	78
09	59	78	117
10	73	108	147
11	98	137	177
12	127	167	225
13	147	196	265
15	167	215	373

Bore code	Tightening torques, N · m		
	UK200	UKX00	UK300
16	196	255	441
17	225	294	530
18	265	343	608
19	–	–	706
20		490	883
22		–	1 220
24			1 470
26			1 770
28			2 150

Appendix table 5 Machining dimensions of holes for housing dowel pins

(1) Machining dimensions of holes for pillow block type housing (P) dowel pins (recommended)

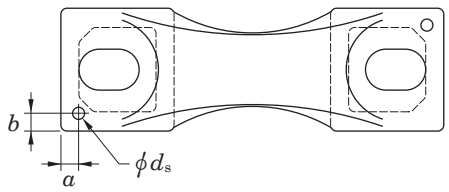

Unit : mm

Nominal No.	a	b	d_s (reference)	Pin seat thickness
P203	6	6	4	12
P204	6	6	4	13
P205	6	6	4	13
P206	6	6	4	15
P207	8	8	5	16
P208	8	8	5	17
P209	8	8	5	17
P210	10	10	5	19
P211	10	10	6	19
P212	10	10	6	22
P213	10	10	6	25
P214	12	12	8	28
P215	12	12	8	28
P216	12	12	8	32
P217	12	12	8	32
P218	15	15	8	34
PX05	7	7	5	16
PX06	8	8	5	17
PX07	8	8	5	19
PX08	8	8	5	21
PX09	8	8	5	21
PX10	9	9	6	22
PX11	9	9	6	28
PX12	9	9	6	28
PX13	10	10	8	28
PX14	10	10	8	32
PX15	10	10	8	32
PX16	12	12	8	34
PX17	12	12	8	34
PX18	15	15	10	38
PX20	19	19	10	45
P305	8	8	5	16
P306	10	10	5	17
P307	10	10	5	19
P308	11	11	6	19
P309	11	11	6	21
P310	11	11	6	24
P311	12	12	8	27
P312	12	12	8	29
P313	12	12	8	32
P314	12	12	10	35
P315	14	14	10	35
P316	15	15	10	35
P317	15	15	10	40
P318	15	15	10	40
P319	15	15	10	46
P320	17	17	13	46
P321	17	17	13	46
P322	17	17	13	50
P324	17	17	13	50
P326	20	20	13	50
P328	20	20	13	60

(2) Machining dimensions of holes for cast steel pillow block type housing (PSC) dowel pins (recommended)

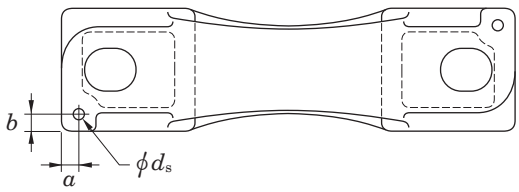

Unit : mm

Nominal No.	a	b	d_s (reference)	Pin seat thickness
P205SC	7.5	6	4	16
P206SC	8.5	6	4	18
P207SC	10	6	5	19
P208SC	12	7	5	19
P209SC	10.5	8	5	20
P210SC	10	8	5	22
P211SC	12	8	6	24
P212SC	15	10	6	25
P213SC	12.5	10	6	28
P214SC	10	10	8	28
P215SC	11.5	10	8	29
P216SC	10	11	8	31
P217SC	12.5	11	8	33
P218SC	12.5	11	8	35
P310SC	14	7	6	27
P311SC	18	10	8	30
P312SC	18	10	8	32
P313SC	18	10	8	35
P314SC	17	10	10	38
P315SC	25	13	10	38
P316SC	30	13	10	38
P317SC	27	15	10	45
P318SC	27	15	10	45
P319SC	30	17	10	51
P320SC	30	18	13	51
P322SC	33	20	13	57
P324SC	33	20	13	57
P326SC	33	20	13	57
P328SC	33	20	13	70

(3) Machining dimensions of holes for square-flanged type housing (F) dowel pins (recommended)

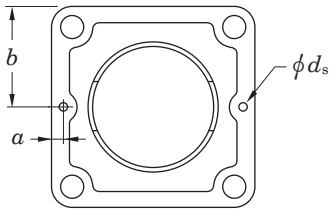

Unit : mm

Nominal No.	a	b	d_s (reference)	Pin seat thickness
F204	6	43	4	11
F205	6	47.5	4	13
F206	7.5	54	4	13
F207	7.5	58.5	5	15
F208	7.5	65	5	15
F209	7.5	68.5	5	16
F210	7.5	71.5	5	16
F211	9	81	6	18
F212	9	87.5	6	18
F213	9	93.5	6	22
F214	10	96.5	8	22
F215	10	100	8	22
F216	10	104	8	22
F217	10	110	8	24
F218	10	117.5	8	25
FX05	7.5	54	5	13
FX06	7.5	58.5	5	14
FX07	7.5	65	5	14
FX08	7.5	68.5	5	14
FX09	7.5	71.5	5	14
FX10	9	81	6	20
FX11	9	87.5	6	20
FX12	9	93.5	6	21
FX13	10	93.5	8	21
FX14	10	98.5	8	22
FX15	10	142	8	24
FX16	10	107	8	24
FX17	10	155	8	24
FX18	12	155	10	24
FX20	12	134	10	28
F305	7.5	55	5	13
F306	7.5	62.5	5	15
F307	7.5	67.5	5	16
F308	9	75	6	17
F309	9	80	6	18
F310	9	87.5	6	19
F311	10	92.5	8	20
F312	10	97.5	8	22
F313	10	104	8	22
F314	12	113	10	25
F315	12	118	10	25
F316	12	125	10	27
F317	12	130	10	27
F318	12	140	10	30
F319	12	145	10	30
F320	16	155	13	32
F321	16	155	13	32
F322	16	170	13	35
F324	16	185	13	40
F326	16	205	13	45
F328	16	225	13	55

(4) Machining dimensions of holes for Rombic-flanged type housing (FL) dowel pins (recommended)

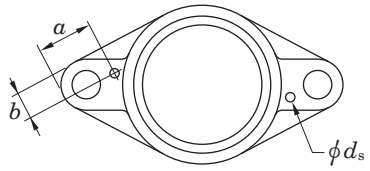

Unit : mm

Nominal No.	a	b	d_s (reference)	Pin seat thickness
FL204	26	9	4	11
FL205	32	10	4	13
FL206	34	12	4	13
FL207	34	14	5	14
FL208	35	15	5	14
FL209	40	15	5	15
FL210	41	16	5	15
FL211	43	19	6	18
FL212	52	22	6	18
FL213	50	21	6	20
FL214	52	22	8	20
FL215	53	23	8	20
FL216	56	23	8	20
FL217	57	25	8	22
FL218	57	26	8	23
FLX05	27	12	5	13
FLX06	30	14	5	14
FLX07	32	15	5	14
FLX08	33	15	5	14
FLX09	35	16	5	14
FLX10	37	19	6	20
FL305	32	12	5	13
FL306	46	14	5	15
FL307	44	14	5	16
FL308	45	17	6	17
FL309	53	19	6	18
FL310	53	19	6	19
FL311	52	20	8	20
FL312	60	21	8	22
FL313	60	25	8	25
FL314	68	26	10	28
FL315	64	26	10	30
FL316	74	29	10	32
FL317	75	31	10	32
FL318	74	32	10	36
FL319	80	32	10	40
FL320	86	34	13	40
FL321	86	34	13	40
FL322	86	36	13	42
FL324	94	41	13	48
FL326	95	41	13	50
FL328	103	45	13	60

Appendix table 6 Shaft tolerances (deviation from nominal dimensions)

Nominal shaft dia. (mm)		Deviation classes of shaft dia.															
Over	Up to	d 6	e 6	f 6	g 5	g 6	h 5	h 6	h 7	h 8	h 9	h 10	js 5	js 6	js 7	j 5	j 6
3	6	−30 −38	−20 −28	−10 −18	−4 −9	−4 −12	0 −5	0 −8	0 −12	0 −18	0 −30	0 −48	±2.5	±4	±6	+3 −2	+6 −2
6	10	−40 −49	−25 −34	−13 −22	−5 −11	−5 −14	0 −6	0 −9	0 −15	0 −22	0 −36	0 −58	±3	±4.5	±7	+4 −2	+7 −2
10	18	−50 −61	−32 −43	−16 −27	−6 −14	−6 −17	0 −8	0 −11	0 −18	0 −27	0 −43	0 −70	±4	±5.5	±9	+5 −3	+8 −3
18	30	−65 −78	−40 −53	−20 −33	−7 −16	−7 −20	0 −9	0 −13	0 −21	0 −33	0 −52	0 −84	±4.5	±6.5	±10	+5 −4	+9 −4
30	50	−80 −96	−50 −66	−25 −41	−9 −20	−9 −25	0 −11	0 −16	0 −25	0 −39	0 −62	0 −100	±5.5	±8	±12	+6 −5	+11 −5
50	80	−100 −119	−60 −79	−30 −49	−10 −23	−10 −29	0 −13	0 −19	0 −30	0 −46	0 −74	0 −120	±6.5	±9.5	±15	+6 −7	+12 −7
80	120	−120 −142	−72 −94	−36 −58	−12 −27	−12 −34	0 −15	0 −22	0 −35	0 −54	0 −87	0 −140	±7.5	±11	±17	+6 −9	+13 −9
120	180	−145 −170	−85 −110	−43 −68	−14 −32	−14 −39	0 −18	0 −25	0 −40	0 −63	0 −100	0 −160	±9	±12.5	±20	+7 −11	+14 −11
180	250	−170 −199	−100 −129	−50 −79	−15 −35	−15 −44	0 −20	0 −29	0 −46	0 −72	0 −115	0 −185	±10	±14.5	±23	+7 −13	+16 −13
250	315	−190 −222	−110 −142	−56 −88	−17 −40	−17 −49	0 −23	0 −32	0 −52	0 −81	0 −130	0 −210	±11.5	±16	±26	+7 −16	±16
315	400	−210 −246	−125 −161	−62 −98	−18 −43	−18 −54	0 −25	0 −36	0 −57	0 −89	0 −140	0 −230	±12.5	±18	±28	+7 −18	±18
400	500	−230 −270	−135 −175	−68 −108	−20 −47	−20 −60	0 −27	0 −40	0 −63	0 −97	0 −155	0 −250	±13.5	±20	±31	+7 −20	±20
500	630	−260 −304	−145 −189	−76 −120	–	−22 −66	–	0 −44	0 −70	0 −110	0 −175	0 −280	–	±22	±35	–	–
630	800	−290 −340	−160 −210	−80 −130	–	−24 −74	–	0 −50	0 −80	0 −125	0 −200	0 −320	–	±25	±40	–	–
800	1 000	−320 −376	−170 −226	−86 −142	–	−26 −82	–	0 −56	0 −90	0 −140	0 −230	0 −360	–	±28	±45	–	–

*Δ_{dmp} : Single plane mean bore diameter deviation

Unit : μm

k 5	k 6	k 7	m 5	m 6	m 7	n 5	n 6	p 6	r 6	r 7	Nominal shaft dia. (mm) Over	Up to	(Reference) Δ_{dmp}* of bearing (class 0)
+ 6 + 1	+ 9 + 1	+13 + 1	+ 9 + 4	+12 + 4	+ 16 + 4	+13 + 8	+ 16 + 8	+ 20 + 12	+ 23 + 15	+ 27 + 15	3	6	0 − 8
+ 7 + 1	+10 + 1	+16 + 1	+12 + 6	+15 + 6	+ 21 + 6	+16 +10	+ 19 + 10	+ 24 + 15	+ 28 + 19	+ 34 + 19	6	10	0 − 8
+ 9 + 1	+12 + 1	+19 + 1	+15 + 7	+18 + 7	+ 25 + 7	+20 +12	+ 23 + 12	+ 29 + 18	+ 34 + 23	+ 41 + 23	10	18	0 − 8
+11 + 2	+15 + 2	+23 + 2	+17 + 8	+21 + 8	+ 29 + 8	+24 +15	+ 28 + 15	+ 35 + 22	+ 41 + 28	+ 49 + 28	18	30	0 − 10
+13 + 2	+18 + 2	+27 + 2	+20 + 9	+25 + 9	+ 34 + 9	+28 +17	+ 33 + 17	+ 42 + 26	+ 50 + 34	+ 59 + 34	30	50	0 − 12
+15 + 2	+21 + 2	+32 + 2	+24 +11	+30 +11	+ 41 + 11	+33 +20	+ 39 + 20	+ 51 + 32	+ 60 + 41	+ 71 + 41	50	65	0 − 15
									+ 62 + 43	+ 73 + 43	65	80	
+18 + 3	+25 + 3	+38 + 3	+28 +13	+35 +13	+ 48 + 13	+38 +23	+ 45 + 23	+ 59 + 37	+ 73 + 51	+ 86 + 51	80	100	0 − 20
									+ 76 + 54	+ 89 + 54	100	120	
+21 + 3	+28 + 3	+43 + 3	+33 +15	+40 +15	+ 55 + 15	+45 +27	+ 52 + 27	+ 68 + 43	+ 88 + 63	+103 + 63	120	140	0 − 25
									+ 90 + 65	+105 + 65	140	160	
									+ 93 + 68	+108 + 68	160	180	
+24 + 4	+33 + 4	+50 + 4	+37 +17	+46 +17	+ 63 + 17	+51 +31	+ 60 + 31	+ 79 + 50	+106 + 77	+123 + 77	180	200	0 − 30
									+109 + 80	+126 + 80	200	225	
									+113 + 84	+130 + 84	225	250	
+27 + 4	+36 + 4	+56 + 4	+43 +20	+52 +20	+ 72 + 20	+57 +34	+ 66 + 34	+ 88 + 56	+126 + 94	+146 + 94	250	280	0 − 35
									+130 + 98	+150 + 98	280	315	
+29 + 4	+40 + 4	+61 + 4	+46 +21	+57 +21	+ 78 + 21	+62 +37	+ 73 + 37	+ 98 + 62	+144 +108	+165 +108	315	355	0 − 40
									+150 +114	+171 +114	355	400	
+32 + 5	+45 + 5	+68 + 5	+50 +23	+63 +23	+ 86 + 23	+67 +40	+ 80 + 40	+108 + 68	+166 +126	+189 +126	400	450	0 − 45
									+172 +132	+195 +132	450	500	
−	+44 0	+70 0	−	+70 +26	+ 96 + 26	−	+ 88 + 44	+122 + 78	+194 +150	+220 +150	500	560	0 − 50
									+199 +155	+225 +155	560	630	
−	+50 0	+80 0	−	+80 +30	+110 + 30	−	+100 + 50	+138 + 88	+225 +175	+255 +175	630	710	0 − 75
									+235 +185	+265 +185	710	800	
−	+56 0	+90 0	−	+90 +34	+124 + 34	−	+112 + 56	+156 +100	+266 +210	+300 +210	800	900	0 −100
									+276 +220	+310 +220	900	1 000	

Appendix table 7 Housing bore tolerances (deviation from nominal dimensions)

Nominal Bore dia. (mm)		Deviation classes of housing bore														
Over	Up to	E 6	F 6	F 7	G 6	G 7	H 6	H 7	H 8	H 9	H 10	J 6	J 7	JS 5	JS 6	JS 7
10	18	+43 +32	+27 +16	+34 +16	+17 +6	+24 +6	+11 0	+18 0	+27 0	+43 0	+70 0	+6 −5	+10 −8	±4	±5.5	±9
18	30	+53 +40	+33 +20	+41 +20	+20 +7	+28 +7	+13 0	+21 0	+33 0	+52 0	+84 0	+8 −5	+12 −9	±4.5	±6.5	±10
30	50	+66 +50	+41 +25	+50 +25	+25 +9	+34 +9	+16 0	+25 0	+39 0	+62 0	+100 0	+10 −6	+14 −11	±5.5	±8	±12
50	80	+79 +60	+49 +30	+60 +30	+29 +10	+40 +10	+19 0	+30 0	+46 0	+74 0	+120 0	+13 −6	+18 −12	±6.5	±9.5	±15
80	120	+94 +72	+58 +36	+71 +36	+34 +12	+47 +12	+22 0	+35 0	+54 0	+87 0	+140 0	+16 −6	+22 −13	±7.5	±11	±17
120	180	+110 +85	+68 +43	+83 +43	+39 +14	+54 +14	+25 0	+40 0	+63 0	+100 0	+160 0	+18 −7	+26 −14	±9	±12.5	±20
180	250	+129 +100	+79 +50	+96 +50	+44 +15	+61 +15	+29 0	+46 0	+72 0	+115 0	+185 0	+22 −7	+30 −16	±10	±14.5	±23
250	315	+142 +110	+88 +56	+108 +56	+49 +17	+69 +17	+32 0	+52 0	+81 0	+130 0	+210 0	+25 −7	+36 −16	±11.5	±16	±26
315	400	+161 +125	+98 +62	+119 +62	+54 +18	+75 +18	+36 0	+57 0	+89 0	+140 0	+230 0	+29 −7	+39 −18	±12.5	±18	±28
400	500	+175 +135	+108 +68	+131 +68	+60 +20	+83 +20	+40 0	+63 0	+97 0	+155 0	+250 0	+33 −7	+43 −20	±13.5	±20	±31
500	630	+189 +145	+120 +76	+146 +76	+66 +22	+92 +22	+44 0	+70 0	+110 0	+175 0	+280 0	–	–	–	±22	±35
630	800	+210 +160	+130 +80	+160 +80	+74 +24	+104 +24	+50 0	+80 0	+125 0	+200 0	+320 0	–	–	–	±25	±40
800	1 000	+226 +170	+142 +86	+176 +86	+82 +26	+116 +26	+56 0	+90 0	+140 0	+230 0	+360 0	–	–	–	±28	±45
1 000	1 250	+261 +195	+164 +98	+203 +98	+94 +28	+133 +28	+66 0	+105 0	+165 0	+260 0	+420 0	–	–	–	±33	±52

*Δ_{Dmp} : Single plane mean outside diameter deviation

Unit : μm

K 5	K 6	K 7	M 5	M 6	M 7	N 5	N 6	N 7	P 6	P 7	R 7	Nominal Bore dia. (mm) Over	Up to	(Reference) Δ_{Dmp}* of bearing (class 0)
+2 −6	+2 −9	+6 −12	−4 −12	−4 −15	0 −18	−9 −17	−9 −20	−5 −23	−15 −26	−11 −29	−16 −34	10	18	0 −8
+1 −8	+2 −11	+6 −15	−5 −14	−4 −17	0 −21	−12 −21	−11 −24	−7 −28	−18 −31	−14 −35	−20 −41	18	30	0 −9
+2 −9	+3 −13	+7 −18	−5 −16	−4 −20	0 −25	−13 −24	−12 −28	−8 −33	−21 −37	−17 −42	−25 −50	30	50	0 −11
+3 −10	+4 −15	+9 −21	−6 −19	−5 −24	0 −30	−15 −28	−14 −33	−9 −39	−26 −45	−21 −51	−30 −60	50	65	0 −13
											−32 −62	65	80	
+2 −13	+4 −18	+10 −25	−8 −23	−6 −28	0 −35	−18 −33	−16 −38	−10 −45	−30 −52	−24 −59	−38 −73	80	100	0 −15
											−41 −76	100	120	
+3 −15	+4 −21	+12 −28	−9 −27	−8 −33	0 −40	−21 −39	−20 −45	−12 −52	−36 −61	−28 −68	−48 −88	120	140	(up to 150) 0 −18 (over to 150)
											−50 −90	140	160	
											−53 −93	160	180	0 −25
+2 −18	+5 −24	+13 −33	−11 −31	−8 −37	0 −46	−25 −45	−22 −51	−14 −60	−41 −70	−33 −79	−60 −106	180	200	0 −30
											−63 −109	200	225	
											−67 −113	225	250	
+3 −20	+5 −27	+16 −36	−13 −36	−9 −41	0 −52	−27 −50	−25 −57	−14 −66	−47 −79	−36 −88	−74 −126	250	280	0 −35
											−78 −130	280	315	
+3 −22	+7 −29	+17 −40	−14 −39	−10 −46	0 −57	−30 −55	−26 −62	−16 −73	−51 −87	−41 −98	−87 −144	315	355	0 −40
											−93 −150	355	400	
+2 −25	+8 −32	+18 −45	−16 −43	−10 −50	0 −63	−33 −60	−27 −67	−17 −80	−55 −95	−45 −108	−103 −166	400	450	0 −45
											−109 −172	450	500	
–	0 −44	0 −70	–	−26 −70	−26 −96	–	−44 −88	−44 −114	−78 −122	−78 −148	−150 −220	500	560	0 −50
											−155 −225	560	630	
–	0 −50	0 −80	–	−30 −80	−30 −110	–	−50 −100	−50 −130	−88 −138	−88 −168	−175 −255	630	710	0 −75
											−185 −265	710	800	
–	0 −56	0 −90	–	−34 −90	−34 −124	–	−56 −112	−56 −146	−100 −156	−100 −190	−210 −300	800	900	0 −100
											−220 −310	900	1 000	
–	0 −66	0 −105	–	−40 −106	−40 −145	–	−66 −132	−66 −171	−120 −186	−120 −225	−250 −355	1 000	1 120	0 −125
											−260 −365	1 120	1 250	

Appendix Table 8 (1) SI units and conversion factors

Mass	SI units	Other Units[1)]	Conversion into SI units	Conversion from SI units
Angle	rad [radian(s)]	° [degree(s)] ∗ ' [minute(s)] ∗ " [second(s)] ∗	1° = π / 180 rad 1' = π / 10 800 rad 1" = π / 648 000 rad	1 rad = 57.295 78°
Length	m [meter(s)]	Å [Angstrom unit] μ [micron(s)] in [inch(es)] ft [foot(feet)] yd [yard(s)] mile [mile(s)]	1 Å = 10^{-10} m = 0.1 nm = 100 pm 1 μ = 1 μm 1 in = 25.4 mm 1 ft = 12 in = 0.304 8 m 1 yd = 3 ft = 0.914 4 m 1 mile = 5 280 ft = 1 609.344 m	1 m = 10^{10} Å 1 m = 39.37 in 1 m = 3.280 8 ft 1 m = 1.093 6 yd 1 km = 0.621 4 mile
Area	m^2	a [are(s)] ha [hectare(s)] acre [acre(s)]	1 a = 100 m^2 1 ha = 10^4 m^2 1 acre = 4 840 yd^2 = 4 046.86 m^2	 1 km^2 = 247.1 acre
Volume	m^3	ℓ, L [liter(s)] ∗ cc [cubic centimeters] gal (US) [gallon(s)] floz (US) [fluid ounce(s)] barrel (US) [barrels(US)]	1 ℓ = 1 dm^3 = 10^{-3} m^3 1 cc = 1 cm^3 = 10^{-6} m^3 1 gal (US) = 231 in^3 = 3.785 41 dm^3 1 floz (US) = 29.573 5 cm^3 1 barrel (US) = 158.987 dm^3	1 m^3 = 10^3ℓ 1 m^3 = 10^6 cc 1 m^3 = 264.17 gal 1 m^3 = 33 814 floz 1 m^3 = 6.289 8 barrel
Time	s [second(s)]	min [minute(s)] ∗ h [hour(s)] ∗ d [day(s)] ∗		
Angular velocity	rad/s			
Velocity	m/s	kn [knot(s)] m/h ∗	1 kn = 1 852 m/h	1 km/h = 0.539 96 kn
Acceleration	m/s^2	G	1 G = 9.806 65 m/s^2	1 m/s^2 = 0.101 97 G
Frequency	Hz [hertz]	c/s [cycle(s)/second]	1 c/s = 1 s^{-1} = 1 Hz	
Rotational frequency	s^{-1}	rpm [revolutions per minute] min^{-1} ∗ r/min	1 rpm = 1/60 s^{-1}	1 s^{-1} = 60 rpm
Mass	kg [kilogram(s)]	t [ton(s)] ∗ lb [pound(s)] gr [grain(s)] oz [ounce(s)] ton (UK) [ton(s) (UK)] ton (US) [ton(s) (US)] car [carat(s)]	1 t = 10^3 kg 1 lb = 0.453 592 37 kg 1 gr = 64.798 91 mg 1 oz = 1/16 lb = 28.349 5 g 1 ton (UK) = 1 016.05 kg 1 ton (US) = 907.185 kg 1 car = 200 mg	 1 kg = 2.204 6 lb 1 g = 15.432 4 gr 1 kg = 35.274 0 oz 1 t = 0.984 2 ton (UK) 1 t = 1.102 3 ton (US) 1 g = 5 car

Note 1) ∗ : Unit can be used as an SI unit.
No asterisk : Unit cannot be used.

Appendix Table 8 (2) SI units and conversion factors

Mass	SI units	Other Units[1)]	Conversion into SI units	Conversion from SI units
Density	kg/m^3			
Linear density	kg/m			
Momentum	kg · m/s			
Moment of momentum, Angular momentum	$kg \cdot m^2/s$			
Moment of inertia	$kg \cdot m^2$			
Force	N [newton(s)]	dyn [dyne(s)]	1 dyn = 10^{-5} N	1 N = 10^5 dyn
		kgf [kilogram-force]	1 kgf = 9.806 65 N	1 N = 0.101 97 kgf
		gf [gram-force]	1 gf = 9.806 65 × 10^{-3} N	
		tf [ton-force]	1 tf = 9.806 65 × 10^3 N	
		lbf [pound-force]	1 lbf = 4.448 22 N	1 N = 0.224 809 lbf
Moment of force	N · m [newton meter(s)]	gf · cm	1 gf · cm = 9.806 65 × 10^{-5} N · m	
		kgf · cm	1 kgf · cm = 9.806 65 × 10^{-2} N · m	
		kgf · m	1 kgf · m = 9.806 65 N · m	1 N · m = 0.101 97 kgf · m
		tf · m	1 tf · m = 9.806 65 × 10^3 N · m	
		lbf · ft	1 lbf · ft = 1.355 82 N · m	1 N · m = 0.737 56 lbf · ft
Pressure, Normal stress	Pa [pascal(s)] or N/m^2 {1 Pa = 1 N/m^2}	gf/cm^2	1 gf/cm^2 = 9.806 65 × 10 Pa	
		kgf/mm^2	1 kgf/mm^2 = 9.806 65 × 10^6 Pa	1 MPa = 0.101 97 kgf/mm^2
		kgf/m^2	1 kgf/m^2 = 9.806 65 Pa	1 Pa = 0.101 97 kgf/m^2
		lbf/in^2	1 lbf/in^2 = 6 894.76 Pa	1 Pa = 0.145 × 10^{-3} lbf/in^2
		bar [bar(s)]	1 bar = 10^5 Pa	1 Pa = 10^{-2} mbar
		at [engineering air pressure]	1 at = 1kgf/cm^2 = 9.806 65 × 10^4 Pa	
		mH_2O, mAq [meter water column]	1 mH_2O = 9.806 65 × 10^3 Pa	
		atm [atmosphere]	1 atm = 101 325 Pa	
		mHg [meter mercury column]	1 mHg = $\frac{101\ 325}{0.76}$ Pa	
		Torr [torr]	1 Torr = 1mmHg = 133.322 Pa	1 Pa = 7.500 6 × 10^{-3} Torr
Viscosity	Pa · s [pascal second]	P [poise]	10^{-2} P = 1 cP = 1 mPa · s	
		kgf · s/m^2	1 kgf · s/m^2 = 9.806 65 Pa · s	1 Pa · s = 0.101 97 kgf · s/m^2
Kinematic viscosity	m^2/s	St [stokes]	10^{-2} St = 1 cSt = 1 mm^2/s	
Surface tension	N/m			

Note 1) ∗ : Unit can be used as an SI unit.
No asterisk : Unit cannot be used.

Appendix Table 8 (3) SI units and conversion factors

Mass	SI units	Other Units[1)]	Conversion into SI units	Conversion from SI units
Work, energy	J [joule(s)] {1 J = 1 N · m}	eV [electron volt(s)] ∗ erg [erg(s)] kgf · m lbf · ft	1 eV = (1.602 189 2 ± 0.000 004 6) × 10^{-19} J 1 erg = 10^{-7} J 1 kgf · m = 9.806 65 J 1 lbf · ft = 1.355 82 J	 1 J = 10^{7} erg 1 J = 0.101 97 kgf · m 1 J = 0.737 56 lbf · ft
Power	W [watt(s)]	erg/s [ergs per second] kgf · m/s PS [French horse-power] HP [horse-power (British)] lbf · ft/s	1 erg/s = 10^{-7} W 1 kgf · m/s = 9.806 65 W 1 PS = 75 kgf · m/s = 735.5 W 1 HP = 550 lbf · ft/s = 745.7 W 1 lbf · ft/s = 1.355 82 W	 1 W = 0.101 97 kgf · m/s 1 W = 0.001 36 PS 1 W = 0.001 34 HP
Thermo-dynamic temperature	K [kelvin(s)]			
Celsius temperature	ºC [celsius(s)] {t ºC = (t + 273.15) K}	ºF [degree(s) Fahrenheit]	$t^{\circ}F = \frac{5}{9}(t - 32)\ ^{\circ}C$	$t^{\circ}C = (\frac{5}{9}t + 32)\ ^{\circ}F$
Linear expansion coefficient	K^{-1}	$^{\circ}C^{-1}$ [per degree]		
Heat	J [joule(s)] {1 J = 1 N · m}	erg [erg(s)] kgf · m cal_{IT} [I. T. calories]	1 erg = 10^{-7} J 1 cal_{IT} = 4.1868 J 1 $Mcal_{IT}$ = 1.163 kW · h	1 J = 10^{7} erg 1 J = 0.238 85 cal_{IT} 1 kW · h = 0.86 × 10^{6} cal_{IT}
Thermal conductivity	W/ (m · K)	W/ (m · ºC) cal/ (s · m · ºC)	1 W/ (m · ºC) = 1 W/ (m · K) 1 cal/ (s · m · ºC) = 4.186 05 W/ (m · K)	
Coefficient of heat transfer	W/ (m^2 · K)	W/ (m^2 · ºC) cal/ (s · m^2 · ºC)	1 W/ (m^2 · ºC) = 1 W/ (m^2 · K) 1 cal/ (s · m^2 · ºC) = 4.186 05 W/ (m^2 · K)	
Heat capacity	J/K	J/ºC	1 J/ºC = 1 J/K	
Massic heat capacity	J/ (kg · K)	J/ (kg · ºC)		

Note 1) ∗ : Unit can be used as an SI unit.
No asterisk : Unit cannot be used.

Appendix Table 8 (4) SI units and conversion factors

Mass	SI units	Other Units[1)]	Conversion into SI units	Conversion from SI units
Electric current	A [ampere(s)]			
Electric charge, quantity of electricity	C [coulomb(s)] {1 C = 1 A · s}	A · h ∗	1 A · h = 3.6 kC	
Tension, electric potential	V [volt(s)] {1 V = 1 W/A}			
Capacitance	F [farad(s)] {1 F = 1 C/V}			
Magnetic field strength	A/m	Oe [oersted(s)]	$1\ \mathrm{Oe} = \frac{10^3}{4\pi}\ \mathrm{A/m}$	$1\ \mathrm{A/m} = 4\pi \times 10^{-3}\ \mathrm{Oe}$
Magnetic flux density	T [tesla(s)] {1 T = 1 N/(A · m) = 1 Wb/m^2 = 1 V · s/m^2}	Gs [gauss(es)] γ [gamma(s)]	$1\ \mathrm{Gs} = 10^{-4}\ \mathrm{T}$ $1\ \gamma = 10^{-9}\ \mathrm{T}$	$1\ \mathrm{T} = 10^{4}\ \mathrm{Gs}$ $1\ \mathrm{T} = 10^{9}\ \gamma$
Magnetic flux	Wb [weber(s)] {1 Wb = 1 V · s}	Mx [maxwell(s)]	$1\ \mathrm{Mx} = 10^{-8}\ \mathrm{Wb}$	$1\ \mathrm{Wb} = 10^{8}\ \mathrm{Mx}$
Self inductance	H [henry (– ries)] {1 H = 1 Wb/A}			
Resistance (to direct current)	Ω [ohm(s)] {1 Ω = 1 V/A}			
Conductance (to direct current)	S [siemens] {1 S = 1 A/V}			
Active power	W {1 W = 1 J/s = 1 A · V}			

Note 1) ∗ : Unit can be used as an SI unit.
No asterisk : Unit cannot be used.

Appendix table 9 Inch/millimeter conversion

Inch		Inches										
		0	1	2	3	4	5	6	7	8	9	10
		mm										
0	0	**0**	**25.4000**	**50.8000**	**76.2000**	**101.6000**	**127.0000**	**152.4000**	**177.8000**	**203.2000**	**228.6000**	**254.0000**
1/64	0.015625	0.3969	25.7969	51.1969	76.5969	101.9969	127.3969	152.7969	178.1969	203.5969	228.9969	254.3969
1/32	0.03125	0.7938	26.1938	51.5938	76.9938	102.3938	127.7938	153.1938	178.5938	203.9938	229.3938	254.7938
3/64	0.046875	1.1906	26.5906	51.9906	77.3906	102.7906	128.1906	153.5906	178.9906	204.3906	229.7906	255.1906
1/16	0.0625	1.5875	26.9875	52.3875	77.7875	103.1875	128.5875	153.9875	179.3875	204.7875	230.1875	255.5875
5/64	0.078125	1.9844	27.3844	52.7844	78.1844	103.5844	128.9844	154.3844	179.7844	205.1844	230.5844	255.9844
3/32	0.09375	2.3812	27.7812	53.1812	78.5812	103.9812	129.3812	154.7812	180.1812	205.5812	230.9812	256.3812
7/64	0.109375	2.7781	28.1781	53.5781	78.9781	104.3781	129.7781	155.1781	180.5781	205.9781	231.3781	256.7781
1/8	0.125	**3.1750**	**28.5750**	**53.9750**	**79.3750**	**104.7750**	**130.1750**	**155.5750**	**180.9750**	**206.3750**	**231.7750**	**257.1750**
9/64	0.140625	3.5719	28.9719	54.3719	79.7719	105.1719	130.5719	155.9719	181.3719	206.7719	232.1719	257.5719
5/32	0.15625	3.9688	29.3688	54.7688	80.1688	105.5688	130.9688	156.3688	181.7688	207.1688	232.5688	257.9688
11/64	0.171875	4.3656	29.7656	55.1656	80.5656	105.9656	131.3656	156.7656	182.1656	207.5656	232.9656	258.3656
3/16	0.1875	4.7625	30.1625	55.5625	80.9625	106.3625	131.7625	157.1625	182.5625	207.9625	233.3625	258.7625
13/64	0.203125	5.1594	30.5594	55.9594	81.3594	106.7594	132.1594	157.5594	182.9594	208.3594	233.7594	259.1594
7/32	0.21875	5.5562	30.9562	56.3562	81.7562	107.1562	132.5562	157.9562	183.3562	208.7562	234.1562	259.5562
15/64	0.234375	5.9531	31.3531	56.7531	82.1531	107.5531	132.9531	158.3531	183.7531	209.1531	234.5531	259.9531
1/4	0.25	**6.3500**	**31.7500**	**57.1500**	**82.5500**	**107.9500**	**133.3500**	**158.7500**	**184.1500**	**209.5500**	**234.9500**	**260.3500**
17/64	0.265625	6.7469	32.1469	57.5469	82.9469	108.3469	133.7469	159.1469	184.5469	209.9469	235.3469	260.7469
9/32	0.28125	7.1438	32.5438	57.9438	83.3438	108.7438	134.1438	159.5438	184.9438	210.3438	235.7438	261.1438
19/64	0.296875	7.5406	32.9406	58.3406	83.7406	109.1406	134.5406	159.9406	185.3406	210.7406	236.1406	261.5406
5/16	0.3125	7.9375	33.3375	58.7375	84.1375	109.5375	134.9375	160.3375	185.7375	211.1375	236.5375	261.9375
21/64	0.328125	8.3344	33.7344	59.1344	84.5344	109.9344	135.3344	160.7344	186.1344	211.5344	236.9344	262.3344
11/32	0.34375	8.7312	34.1312	59.5312	84.9312	110.3312	135.7312	161.1312	186.5312	211.9312	237.3312	262.7312
23/64	0.359375	9.1281	34.5281	59.9281	85.3281	110.7281	136.1281	161.5281	186.9281	212.3281	237.7281	263.1281
3/8	0.375	**9.5250**	**34.9250**	**60.3250**	**85.7250**	**111.1250**	**136.5250**	**161.9250**	**187.3250**	**212.7250**	**238.1250**	**263.5250**
25/64	0.390625	9.9219	35.3219	60.7219	86.1219	111.5219	136.9219	162.3219	187.7219	213.1219	238.5219	263.9219
13/32	0.40625	10.3188	35.7188	61.1188	86.5188	111.9188	137.3188	162.7188	188.1188	213.5188	238.9188	264.3188
27/64	0.421875	10.7156	36.1156	61.5156	86.9156	112.3156	137.7156	163.1156	188.5156	213.9156	239.3156	264.7156
7/16	0.4375	11.1125	36.5125	61.9125	87.3125	112.7125	138.1125	163.5125	188.9125	214.3125	239.7125	265.1125
29/64	0.453125	11.5094	36.9094	62.3094	87.7094	113.1094	138.5094	163.9094	189.3094	214.7094	240.1094	265.5094
15/32	0.46875	11.9062	37.3062	62.7062	88.1062	113.5062	138.9062	164.3062	189.7062	215.1062	240.5062	265.9062
31/64	0.484375	12.3031	37.7031	63.1031	88.5031	113.9031	139.3031	164.7031	190.1031	215.5031	240.9031	266.3031
1/2	0.5	**12.7000**	**38.1000**	**63.5000**	**88.9000**	**114.3000**	**139.7000**	**165.1000**	**190.5000**	**215.9000**	**241.3000**	**266.7000**
33/64	0.515625	13.0969	38.4969	63.8969	89.2969	114.6969	140.0969	165.4969	190.8969	216.2969	241.6969	267.0969
17/32	0.53125	13.4938	38.8938	64.2938	89.6938	115.0938	140.4938	165.8938	191.2938	216.6938	242.0938	267.4938
35/64	0.546875	13.8906	39.2906	64.6906	90.0906	115.4906	140.8906	166.2906	191.6906	217.0906	242.4906	267.8906
9/16	0.5625	14.2875	39.6875	65.0875	90.4875	115.8875	141.2875	166.6875	192.0875	217.4875	242.8875	268.2875
37/64	0.578125	14.6844	40.0844	65.4844	90.8844	116.2844	141.6844	167.0844	192.4844	217.8844	243.2844	268.6844
19/32	0.59375	15.0812	40.4812	65.8812	91.2812	116.6812	142.0812	167.4812	192.8812	218.2812	243.6812	269.0812
39/64	0.609375	15.4781	40.8781	66.2781	91.6781	117.0781	142.4781	167.8781	193.2781	218.6781	244.0781	269.4781
5/8	0.625	**15.8750**	**41.2750**	**66.6750**	**92.0750**	**117.4750**	**142.8750**	**168.2750**	**193.6750**	**219.0750**	**244.4750**	**269.8750**
41/64	0.640625	16.2719	41.6719	67.0719	92.4719	117.8719	143.2719	168.6719	194.0719	219.4719	244.8719	270.2719
21/32	0.65625	16.6688	42.0688	67.4688	92.8688	118.2688	143.6688	169.0688	194.4688	219.8688	245.2688	270.6688
43/64	0.671875	17.0656	42.4656	67.8656	93.2656	118.6656	144.0656	169.4656	194.8656	220.2656	245.6656	271.0656
11/16	0.6875	17.4625	42.8625	68.2625	93.6625	119.0625	144.4625	169.8625	195.2625	220.6625	246.0625	271.4625
45/64	0.703125	17.8594	43.2594	68.6594	94.0594	119.4594	144.8594	170.2594	195.6594	221.0594	246.4594	271.8594
23/32	0.71875	18.2562	43.6562	69.0562	94.4562	119.8562	145.2562	170.6562	196.0562	221.4562	246.8562	272.2562
47/64	0.734375	18.6531	44.0531	69.4531	94.8531	120.2531	145.6531	171.0531	196.4531	221.8531	247.2531	272.6531
3/4	0.75	**19.0500**	**44.4500**	**69.8500**	**95.2500**	**120.6500**	**146.0500**	**171.4500**	**196.8500**	**222.2500**	**247.6500**	**273.0500**
49/64	0.765625	19.4469	44.8469	70.2469	95.6469	121.0469	146.4469	171.8469	197.2469	222.6469	248.0469	273.4469
25/32	0.78125	19.8438	45.2438	70.6438	96.0438	121.4438	146.8438	172.2438	197.6438	223.0438	248.4438	273.8438
51/64	0.796875	20.2406	45.6406	71.0406	96.4406	121.8406	147.2406	172.6406	198.0406	223.4406	248.8406	274.2406
13/16	0.8125	20.6375	46.0375	71.4375	96.8375	122.2375	147.6375	173.0375	198.4375	223.8375	249.2375	274.6375
53/64	0.828125	21.0344	46.4344	71.8344	97.2344	122.6344	148.0344	173.4344	198.8344	224.2344	249.6344	275.0344
27/32	0.84375	21.4312	46.8312	72.2312	97.6312	123.0312	148.4312	173.8312	199.2312	224.6312	250.0312	275.4312
55/64	0.859375	21.8281	47.2281	72.6281	98.0281	123.4281	148.8281	174.2281	199.6281	225.0281	250.4281	275.8281
7/8	0.875	**22.2250**	**47.6250**	**73.0250**	**98.4250**	**123.8250**	**149.2250**	**174.6250**	**200.0250**	**225.4250**	**250.8250**	**276.2250**
57/64	0.890625	22.6219	48.0219	73.4219	98.8219	124.2219	149.6219	175.0219	200.4219	225.8219	251.2219	276.6219
29/32	0.90625	23.0188	48.4188	73.8188	99.2188	124.6188	150.0188	175.4188	200.8188	226.2188	251.6188	277.0188
59/64	0.921875	23.4156	48.8156	74.2156	99.6156	125.0156	150.4156	175.8156	201.2156	226.6156	252.0156	277.4156
15/16	0.9375	23.8125	49.2125	74.6125	100.0125	125.4125	150.8125	176.2125	201.6125	227.0125	252.4125	277.8125
61/64	0.953125	24.2094	49.6094	75.0094	100.4094	125.8094	151.2094	176.6094	202.0094	227.4094	252.8094	278.2094
31/32	0.96875	24.6062	50.0062	75.4062	100.8062	126.2062	151.6062	177.0062	202.4062	227.8062	253.2062	278.6062
63/64	0.984375	25.0031	50.4031	75.8031	101.2031	126.6031	152.0031	177.4031	202.8031	228.2031	253.6031	279.0031

Appendix table 10 Mechanical properties of metal materials (reference)

(1) Modulus of longitudinal elasticity, elastic limit, and ultimate strength

Material	Main components and others	Specific gravity	Modulus of longitudinal elasticity (GPa)	Elastic limit σ_e (MPa)	Ultimate strength (MPa)		
					Tensile K_t	Compression K_c	Shear K_s
Gray cast iron (FC150)		7.1–7.3	69	29	118	590	108
(FC200)		7.1–7.3	98	88	137– 216	740	206
(FC250)		7.1–7.3	103	88	176– 314	880	206
White heart malleable cast iron	Residual carbon : 1.6% or less	7.1–7.3	158	196	314– 392	820	382
Black heart malleable cast iron		7.2–7.6	158	196	274– 392	820	382
Carbon steel	General	7.7–7.8	196–216	176–245	314– 830	–	–
Extra mild steel	C 0.05–0.15%	7.8	196	118	Up to 372	Virtually identical to tensile strength, provided buckling can be ignored	0.8 K_t
Mild steel	C 0.15–0.25%	7.8	204	157	372– 392		0.75 K_t
Middle hard steel	C 0.25–0.40%	7.8	206	245–294	490– 590		0.75 K_t
Hard steel	C 0.40–0.50%	7.8	216	343	590– 690		0.7 K_t
Maximum hard steel	C 0.50–0.65%	7.8	216	372	690– 830		0.65 K_t
Mild steel	C 0.18% hot rolling	7.8	206	176	421		314
Hard steel	Oil hardening, tempering at 700 ℃	7.8	206	343	590		461
Tool steel	C 0.60–1.50% hardening	7.8	216	441	660		820
Cast steel	General	7.8–7.9	206–211	176–245	343– 600	343–600	284–382
Cast steel (mild)	C 0.15–0.22%	7.8–7.9	206	196	363– 431	363–431	284
Cast steel (middle hard)	C 0.22–0.30%	7.8–7.9	211	225	392– 490	392–490	333
Cast steel (hard)	C 0.30–0.40%	7.9	211	245	490– 590	490–590	382
Nickel steel	C 0.25–0.35% Ni 2–5%	7.85	206–216	333	640– 830	640	401
Chrome steel	C 0.13–0.48% Cr 0.9–1.2%	7.85	206–216	–	780– 980	–	–
Nickel chrome steel	C, Ni, Cr included	7.85	206–216	–	740– 980	–	382–500
Chromium molybdenum steel	C, Cr, Mo included	7.85	206–216	–	830– 980	–	–
Manganese steel	C 0.2–0.46% Mn 1–1.4%	7.85	206–216	–	440–1 080	–	–
Spring steel		7.86	216	735	1 080–1 670	1 670	–
Stainless steel	C, Cr, Ni included	7.75	206–216	–	620	–	410
Brass casting	Cu 60% Zn 40%	8.5	69	–	176– 216	108	147
Brass (forged plate)	Cu 60% Zn 40%	8.4	78– 98	–	274– 392	314	206
Brass (forged rod)	Cu 60% Zn 40%	8.4	82	–	520	314	314
Phosphor bronze casting	Cu 90% Sn 10% P 0.1%	8.8	93–103	–	196– 294	137	176
Phosphor bronze (forging)	Cu 90% Sn 10% P 0.1%	8.8	132	–	294– 980	206	382
Tin		7.28	39– 54	–	27	–	–
Lead		11.34	15– 17	–	20	–	–
Zinc		7.1	78–127	–	78– 176	–	–

(2) Allowable stress

Unit : MPa

Material	Tensile K_t			Compression K_c		Bending K_b			Shear K_s			Torsion K_d		
	a	b	c	a	b	a	b	c	a	b	c	a	b	c
Cast iron (cast)	29– 34	20– 23	10–12	88– 98	59– 65	45– 59	30– 39	15–20	29– 34	20–23	10–12	26– 34	18–23	88–118
Cast iron (machined)	29– 34	20– 23	10–12	88– 98	59– 65	55– 71	–	–	29– 34	20–23	10–12	26– 34	18–23	88–118
Malleable cast iron	44– 69	29– 46	15–23	59– 88	39– 59	44– 98	29– 46	15–23	–	–	–	29– 39	20–26	10– 13
Cast steel	59–118	39– 78	20–39	88–147	59– 98	74–118	49– 78	25–39	47– 94	31–63	16–31	47– 94	31–63	16– 31
Mild steel	98–157	66–105	32–52	98–157	66–105	88–147	59– 98	35–49	78–127	52–85	26–42	78–137	52–91	26– 46
Middle hard steel	118–176	78–118	39–59	118–176	78–118	118–176	78–118	39–59	94–137	63–94	31–47	88–137	59–94	29– 47
Nickel steel	118–176	78–118	39–59	118–176	78–118	118–176	78–118	39–59	94–137	63–94	31–47	88–137	59–92	29– 47
Carbon steel casting	88–118	59– 78	29–39	88–118	59– 78	88–118	59– 78	29–39	71– 93	47–63	24–31	35– 47	24–31	12– 16
Brass (rolled)	10– 59	26– 35	13–20	39– 59	26– 39	39– 59	26– 39	13–20	34– 47	21–31	11–16	31– 47	21–31	11– 16
Bronze	29– 39	20– 26	10–13	29– 39	20– 26	29– 39	20– 26	10–13	–	–	–	–	–	–
Phosphor bronze	59– 88	39– 59	20–29	59– 88	39– 59	59– 88	39– 59	20–29	44– 69	29–46	15–23	44– 69	29–46	15– 23
Aluminum casting	10– 12	7– 8	2– 4	–	–	15– 20	10– 13	5– 7	–	–	–	–	–	–

Remarks 1. a is applicable in the case of static load, b is applicable in the case of dynamic load, and c is applicable to in the case of repeated load.
2. Bending allowable stress K_b and torsion allowable stress K_d of cast iron are applicable when the cross section is round and safety factor is within a range from 5 to 6.

Appendix table 11 (1) Hexagon socket head cap screws (abstract from JIS B 1176)

M 1.6 – 24

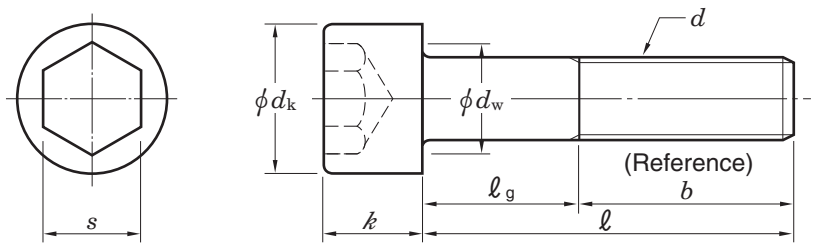

Allowance of bolt length (ℓ)

Unit : mm

Bolt length (ℓ) Over	Bolt length (ℓ) Up to	Allowance of length
–	3	±0.2
3	6	±0.24
6	10	±0.29
10	16	±0.35
16	30	±0.42
30	50	±0.5
50	80	±0.6
80	120	±0.7
120	180	±0.8
180	240	±0.95
240	300	±1.05

(1) Parts class A M 1.6–24

Unit : mm

Nominal size of screw d	Coarse screw thread pitch	M 1.6	M 2	M 2.5	M 3	M 4	M 5	M 6	M 8	M 10	M 12	(M 14)	M 16	(M 18)	M 20	(M 22)	M 24
		0.35	0.4	0.45	0.5	0.7	0.8	1	1.25	1.5	1.75	2	2	2.5	2.5	2.5	3
Head dia. d_k		3	3.8	4.5	5.5	7	8.5	10	13	16	18	21	24	27	30	33	36
Head height k		1.6	2	2.5	3	4	5	6	8	10	12	14	16	18	20	22	24
Bearing surface dia. d_w	(min.)	2.72	3.4	4.18	5.07	6.53	8.03	9.38	12.33	15.33	17.23	20.17	23.17	25.87	28.87	31.81	34.81
Nominal size of hexagon socket s		1.5	1.5	2	2.5	3	4	5	6	8	10	12	14	14	17	17	19
Thread length b	(reference)	15	16	17	18	20	22	24	28	32	36	40	44	48	52	56	60

Nominal length ℓ	M 1.6	M 2	M 2.5	M 3	M 4	M 5	M 6	M 8	M 10	M 12	(M 14)	M 16	(M 18)	M 20	(M 22)	M 24
	Body length ℓ_g (max.)															
2.5																
3																
4																
5																
6																
8																
10																
12																
16																
20		4	8	7	10	8										
25				12	15	13	11									
30					20	18	16	12								
35						23	21	17	13							
40							26	22	18	14						
45							31	27	23	19	20	16				
50							36	32	28	24						
55								37	33	29	25	21	17			
60								42	38	34	30	26	22	18		
65								52	48	44	40	36	32	28	24	
70									58	54	50	46	42	38	34	30
80									68	64	60	56	52	48	44	40
90										74	70	66	62	58	54	50
100										84	80	76	72	68	64	60
110											90	86	82	78	74	70
120											100	96	92	88	84	80
130												106	102	98	94	90
140												116	112	108	104	100
150													132	128	124	120
160														148	144	140
180																
200																

Remarks 1. Priority is given to the nominal sizes of screws without parentheses.
2. Nominal lengths (ℓ) to be recommended for the nominal sizes of screw are within the range enclosed by bold lines in the column of "Body length ℓ_g". In the column of "Body length ℓ_g", thread of the screw with length shorter than that indicated under dotted lines should be continuous. For the continuous thread stud screw, the incomplete thread portion length under the neck of the screw should be approximately three times of the thread pitch.
3. The sides of the head of screw should be single or double knurled. The d_k values in the table are the maximum values without knurls.
4. Roundness or chamfers on the bearing surface should be provided between the diameter of the head (d_k) and the diameter of bearing surface (d_w), and the surface should be free from burrs.

Appendix table 11 (2) Hexagon socket head cap screws (abstract from JIS B 1176)

M 27 – 52

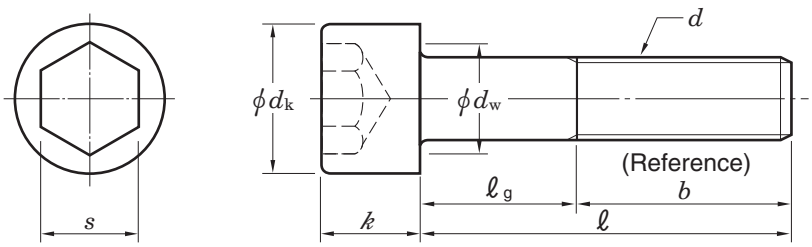

Allowance of bolt length (ℓ)

Unit : mm

Bolt length (ℓ) Over	Bolt length (ℓ) Up to	Allowance of length
–	3	±0.2
3	6	±0.24
6	10	±0.29
10	16	±0.35
16	30	±0.42
30	50	±0.5
50	80	±0.6
80	120	±0.7
120	180	±0.8
180	240	±0.95
240	300	±1.05

(2) Parts class A M 27–52

Unit : mm

Nominal size of screw d	Coarse screw thread pitch	(M 27)	M 30	(M 33)	M 36	(M 39)	M 42	(M 45)	M 48	(M 52)
		3	3.5	3.5	4	4	4.5	4.5	5	5
Head dia. d_k		40	45	50	54	58	63	68	72	78
Head height k		27	30	33	36	39	42	45	48	52
Bearing surface dia. d_w (min.)		38.61	43.61	48.61	52.54	56.34	61.34	66.34	70.34	76.34
Nominal size of hexagon socket s		19	22	24	27	27	32	32	36	36
Thread length b (reference)		66	72	78	84	90	96	102	108	116

Nominal length ℓ	(M 27)	M 30	(M 33)	M 36	(M 39)	M 42	(M 45)	M 48	(M 52)
	Body length ℓ_g (max.)								
45									
50			(M 33)	M 36					
55									
60					(M 39)	M 42			
65									
70							(M 45)	M 48	
80	(M 27)								(M 52)
90	24	M 30	(M 33)						
100	34	28	22						
110	44	38	32	M 36	(M 39)	M 42			
120	54	48	42	36	30	24	(M 45)		
130	64	58	52	46	40	34	28	M 48	
140	74	68	62	56	50	44	38	32	(M 52)
150	84	78	72	66	60	54	48	42	34
160	94	88	82	76	70	64	58	52	44
180	114	108	102	96	90	84	78	72	64
200	134	128	122	116	110	104	98	92	84
220	154	148	142	136	130	124	118	112	104
240	174	168	162	156	150	144	138	132	124
260	194	188	182	176	170	164	158	152	144
280	214	208	202	196	190	184	178	172	164
300	234	228	222	216	210	204	198	192	184

Remarks
1. Priority is given to the nominal sizes of screws without parentheses.
2. Nominal lengths (ℓ) to be recommended for the nominal sizes of screw are within the range enclosed by bold lines in the column of "Body length ℓ_g". In the column of "Body length ℓ_g", thread of the screw with length shorter than that indicated under dotted lines should be continuous. For the continuous thread stud screw, the incomplete thread portion length under the neck of the screw should be approximately three times of the thread pitch.
3. The sides of the head of screw should be single or double knurled. The d_k values in the table are the maximum values without knurls.
4. Roundness or chamfers on the bearing surface should be provided between the diameter of the head (d_k) and the diameter of bearing surface (d_w), and the surface should be free from burrs.

Appendix table 12 (1) Hexagon head bolts (abstract from JIS B 1180)

Parts class A M 1.6 – 24

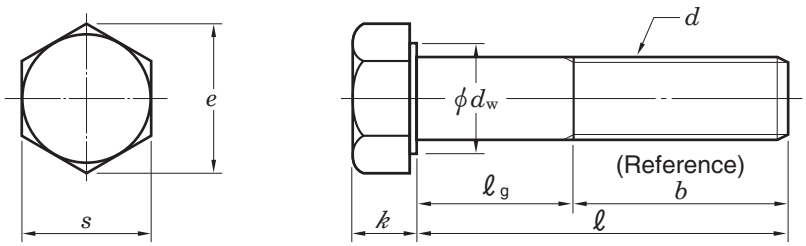

Allowance of bolt length (ℓ)

Unit : mm

Bolt length (ℓ) Over	Bolt length (ℓ) Up to	Allowance of length
–	20	±0.35
20	30	±0.42
30	50	±0.5
50	80	±0.6
80	120	±0.7
120	150	±0.8

(1) Parts class A M 1.6–24

Unit : mm

Nominal size of screw d	Coarse screw thread pitch	**M 1.6**	**M 2**	**M 2.5**	**M 3**	**(M 3.5)**	**M 4**	**M 5**	**M 6**	**M 8**	**M 10**	**M 12**	**(M 14)**	**M 16**	**(M 18)**	**M 20**	**(M 22)**	**M 24**
		0.35	0.4	0.45	0.5	0.6	0.7	0.8	1	1.25	1.5	1.75	2	2	2.5	2.5	2.5	3
	Fine thread	–	–	–	–	–	–	–	–	**M 8 × 1**	**M 10 × 1**	**M 12 ×1.5**	–	**M 16 ×1.5**	–	**M 20 ×1.5**	–	**M 24 × 2**
		–	–	–	–	–	–	–	–	–	(M 10 ×1.25)	(M 12 ×1.25)	(M 14 ×1.5)	–	(M 18 ×1.5)	(M 20 × 2)	(M 22 ×1.5)	–
Bearing surface dia. d_w (min.)		2.27	3.07	4.07	4.57	5.07	5.88	6.88	8.88	11.63	14.63	16.63	19.64	22.49	25.34	28.19	31.71	33.61
Width across flats s (max.)		3.2	4	5	5.5	6	7	8	10	13	16	18	21	24	27	30	34	36
Width across corners e (min.)		3.41	4.32	5.45	6.01	6.58	7.66	8.79	11.05	14.38	17.77	20.03	23.36	26.75	30.14	33.53	37.72	39.98
Head height k (basic)		1.1	1.4	1.7	2	2.4	2.8	3.5	4	5.3	6.4	7.5	8.8	10	11.5	12.5	14	15
Thread length b (reference)	$\ell \leq 125$	9	10	11	12	13	14	16	18	22	26	30	34	38	42	46	50	54
	$125 < \ell \leq 150$	–	–	–	–	–	–	–	–	–	–	–	40	44	48	52	56	60

Nominal length ℓ	M 1.6	M 2	M 2.5	M 3	(M 3.5)	M 4	M 5	M 6	M 8	M 10	M 12	(M 14)	M 16	(M 18)	M 20	(M 22)	M 24
	Body length ℓ_g (max.)																
12	3																
16	7	6	5														
20		10	9	8	7												
25			14	13	12	11	9										
30				18	17	16	14	12									
35					22	21	19	17									
40						26	24	22	18								
45							29	27	23	19							
50							34	32	28	24	20						
55								37	33	29	25						
60								42	38	34	30	26					
65									43	39	35	31	27				
70									48	44	40	36	32	28			
80									58	54	50	46	42	38	34		
90										64	60	56	52	48	44	40	36
100										74	70	66	62	58	54	50	46
110											80	76	72	68	64	60	56
120											90	86	82	78	74	70	66
130												90	86	82	78	74	70
140												100	96	92	88	84	80
150													106	102	98	94	90

As for the bolts with nominal length within this area, standards of continuous thread stud hexagon head bolt (parts class A) should be observed.

Remarks 1. Priority is given to the nominal sizes of screws without parentheses.
2. Nominal lengths (ℓ) to be recommended for the nominal sizes of screw are within the range enclosed by bold lines.
3. Body length ℓ_g (maximum) should be found by the following formula : ℓ_g (maximum) = Nominal length (ℓ) – Thread length (b)

Appendix table 12 (2) Hexagon head bolts (abstract from JIS B 1180)

Parts class B M 16 – 64

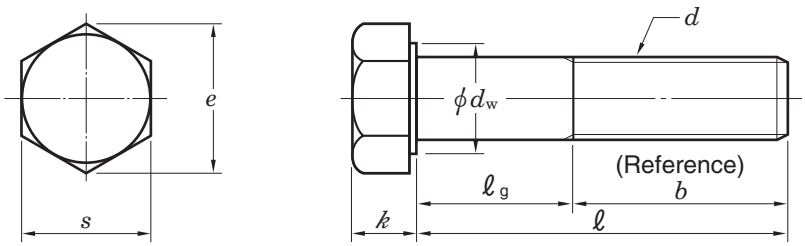

Allowance of bolt length (ℓ)

Unit : mm

Bolt length (ℓ) Over	Bolt length (ℓ) Up to	Allowance of length
–	80	±1.5
80	90	±1.7
90	120	±1.75
120	180	±2
180	240	±2.3
240	300	±2.6
300	400	±2.85
400	500	±3.15

(2) Parts class B M 16–64

Unit : mm

Nominal size of screw d		M 16	(M 18)	M 20	(M 22)	M 24	(M 27)	M 30	(M 33)	M 36	(M 39)	M 42	(M 45)	M 48	(M 52)	M 56	(M 60)	M 64
	Coarse screw thread pitch	2	2.5	2.5	2.5	3	3	3.5	3.5	4	4	4.5	4.5	5	5	5.5	5.5	6
	Fine thread	M 16 ×1.5	–	M 20 ×1.5	–	M 24 × 2	–	M 30 × 2	–	M 36 × 3	–	M 42 × 3	–	M 48 × 3	–	M 56 × 4	–	M 64 × 4
		–	(M 18 ×1.5)	(M 20 × 2)	(M 22 ×1.5)	–	(M 27 × 2)	–	(M 33 × 2)	–	(M 39 × 3)	–	(M 45 × 3)	–	(M 52 × 4)	–	(M 60 × 4)	–
Bearing surface dia. d_w (min.)		22	24.85	27.7	31.35	33.25	38	42.75	46.55	51.11	55.86	59.95	64.7	69.45	74.2	78.66	83.41	88.16
Width across flats s (max.)		24	27	30	34	36	41	46	50	55	60	65	70	75	80	85	90	95
Width across corners e (min.)		26.17	29.56	32.95	37.29	39.55	45.2	50.85	55.37	60.79	66.44	71.3	76.95	82.6	88.25	93.56	99.21	104.86
Head height k (basic)		10	11.5	12.5	14	15	17	18.7	21	22.5	25	26	28	30	33	35	38	40
Thread length b (reference)	ℓ ≤ 125	38	42	46	50	54	60	66	–	–	–	–	–	–	–	–	–	–
	125 < ℓ ≤ 200	44	48	52	56	60	66	72	78	84	90	96	102	108	116	–	–	–
	200 < ℓ ≤ 500	–	–	–	69	73	79	85	91	97	103	109	115	121	129	137	145	153

Nominal length ℓ	M 16	(M 18)	M 20	(M 22)	M 24	(M 27)	M 30	(M 33)	M 36	(M 39)	M 42	(M 45)	M 48	(M 52)	M 56	(M 60)	M 64
	Body length ℓ_g (max.)																
65		(M 18)															
70			M 20														
80				(M 22)	M 24												
90						(M 27)											
100						40	M 30										
110						50	44										
120						60	54	(M 33)									
130						64	58	52	M 36								
140						74	68	62	56	(M 39)							
150						84	78	72	66	60	M 42						
160	116	112	108	104	100	94	88	82	76	70	64	(M 45)	M 48				
180		132	128	124	120	114	108	102	96	90	84	78	72	(M 52)			
200			148	144	140	134	128	122	116	110	104	98	92	84	M 56		
220				151	147	141	135	129	123	117	111	105	99	91	83	(M 60)	
240					167	161	155	149	143	137	131	125	119	111	103	95	M 64
260						181	175	169	163	157	151	145	139	131	123	115	107
280							195	189	183	177	171	165	159	151	143	135	127
300							215	209	203	197	191	185	179	171	163	155	147
320								229	223	217	211	205	199	191	183	175	167
340									243	237	231	225	219	211	203	195	187
360									263	257	251	245	239	231	223	215	207
380										277	271	265	259	251	243	235	227
400											291	285	279	271	263	255	247
420											311	305	299	291	283	275	267
440												325	319	311	303	295	287
460													339	331	323	315	307
480													359	351	343	335	327
500														371	363	355	347

As for the bolts with nominal length within this area, standards of (1) parts class A should be observed.

As for the bolts with nominal length within this area, standards of continuous thread stud hexagon head bolt (parts class A or B) should be observed.

Remarks 1. Priority is given to the nominal sizes of screws without parentheses.
2. Nominal lengths (ℓ) to be recommended for the nominal sizes of screw are within the range enclosed by bold lines.
3. Body length ℓ_g (maximum) should be found by the following formula : ℓ_g (maximum) = Nominal length (ℓ) – Thread length (b)

Appendix table 13 Hexagon head nuts (abstract from JIS B 1181)

Parts class A M 1.6 – 16
Parts class B M 18 – 64

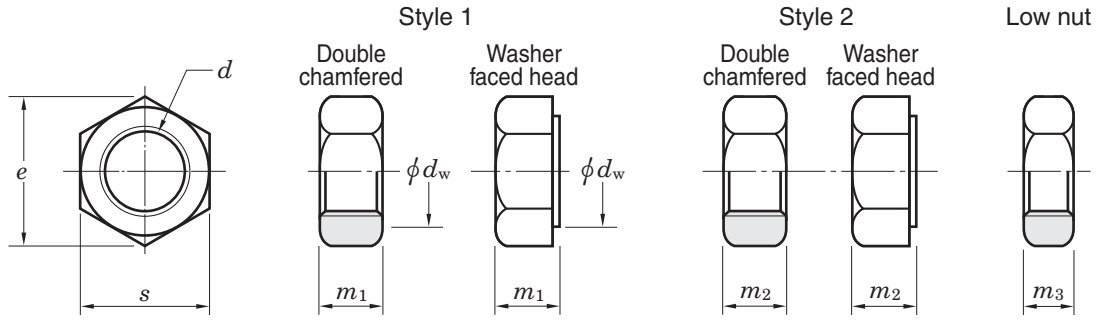

(1) Parts class A M 1.6–16

Unit : mm

Nominal size of screw d														
	Coarse screw thread pitch	M 1.6	M 2	M 2.5	M 3	(M 3.5)	M 4	M 5	M 6	M 8	M 10	M 12	(M 14)	M 16
		0.35	0.4	0.45	0.5	0.6	0.7	0.8	1	1.25	1.5	1.75	2	2
	Fine thread	–	–	–	–	–	–	–	–	M 8 × 1	M 10 × 1	M 12 × 1.5	–	M 16 × 1.5
		–	–	–	–	–	–	–	–	–	(M 10 × 1.25)	(M 12 × 1.25)	(M 14 × 1.5)	–
Bearing surface dia. d_w (min.)		2.27	3.07	4.07	4.57	5.07	5.88	6.88	8.88	11.63	14.63	16.63	19.64	22.49
Width across flats s (max.)		3.2	4	5	5.5	6	7	8	10	13	16	18	21	24
Width across corners e (min.)		3.41	4.32	5.45	6.01	6.58	7.66	8.79	11.05	14.38	17.77	20.03	23.36	26.75
Height	m_1 (max.)	1.3	1.6	2	2.4	2.8	3.2	4.7	5.2	6.8	8.4	10.8	12.8	14.8
	m_2 (max.)	–	–	–	–	–	–	5.1	5.7	7.5	9.3	12	14.1	16.4
	m_3 (max.)	1	1.2	1.6	1.8	2	2.2	2.7	3.2	4	5	6	7	8

Remark Priority is given to the nominal sizes of screws without parentheses.

(2) Parts class B M 18–64

Unit : mm

Nominal size of screw d																	
	Coarse screw thread pitch	(M 18)	M 20	(M 22)	M 24	(M 27)	M 30	(M 33)	M 36	(M 39)	M 42	(M 45)	M 48	(M 52)	M 56	(M 60)	M 64
		2.5	2.5	2.5	3	3	3.5	3.5	4	4	4.5	4.5	5	5	5.5	5.5	6
	Fine thread	–	M 20 ×1.5	–	M 24 × 2	–	M 30 × 2	–	M 36 × 3	–	M 42 × 3	–	M 48 × 3	–	M 56 × 4	–	M 64 × 4
		(M 18 ×1.5)	(M 20 × 2)	(M 22 ×1.5)	–	(M 27 × 2)	–	(M 33 × 2)	–	(M 39 × 3)	–	(M 45 × 3)	–	(M 52 × 4)	–	(M 60 × 4)	–
Bearing surface dia. d_w (min.)		24.85	27.7	31.35	33.25	38	42.75	46.55	51.11	55.86	59.95	64.7	69.45	74.2	78.66	83.41	88.16
Width across flats s (max.)		27	30	34	36	41	46	50	55	60	65	70	75	80	85	90	95
Width across corners e (min.)		29.56	32.95	37.29	39.55	45.2	50.85	55.37	60.79	66.44	71.3	76.95	82.6	88.25	93.56	99.21	104.86
Height	m_1 (max.)	15.8	18	19.4	21.5	23.8	25.6	28.7	31	33.4	34	36	38	42	45	48	51
	m_2 (max.)	17.6	20.3	21.8	23.9	26.7	28.6	32.5	34.7	–	–	–	–	–	–	–	–
	m_3 (max.)	9	10	11	12	13.5	15	16.5	18	19.5	21	22.5	24	26	28	30	32

Remark Priority is given to the nominal sizes of screws without parentheses.

Appendix table 14 Steel hardness conversion

Rockwell C scale 1 471.0 N (150 kgf)	Vickers	Brinell Standard steel ball	Brinell Tungsten carbide steel ball	Rockwell A scale 588.4 N (60 kgf)	Rockwell B scale 980.7 N (100 kgf)	Shore
68	940			85.6		97
67	900			85.0		95
66	865			84.5		92
65	832		739	83.9		91
64	800		722	83.4		88
63	772		705	82.8		87
62	746		688	82.3		85
61	720		670	81.8		83
60	697		654	81.2		81
59	674		634	80.7		80
58	653		615	80.1		78
57	633		595	79.6		76
56	613		577	79.0		75
55	595	–	560	78.5		74
54	577	–	543	78.0		72
53	560	–	525	77.4		71
52	544	500	512	76.8		69
51	528	487	496	76.3		68
50	513	475	481	75.9		67
49	498	464	469	75.2		66
48	484	451	455	74.7		64
47	471	442	443	74.1		63
46	458	432	432	73.6		62
45	446	421		73.1		60
44	434	409		72.5		58
43	423	400		72.0		57
42	412	390		71.5		56
41	402	381		70.9		55
40	392	371		70.4	–	54
39	382	362		69.9	–	52
38	372	353		69.4	–	51
37	363	344		68.9	–	50
36	354	336		68.4	(109.0)	49
35	345	327		67.9	(108.5)	48
34	336	319		67.4	(108.0)	47
33	327	311		66.8	(107.5)	46
32	318	301		66.3	(107.0)	44
31	310	294		65.8	(106.0)	43
30	302	286		65.3	(105.5)	42
29	294	279		64.7	(104.5)	41
28	286	271		64.3	(104.0)	41
27	279	264		63.8	(103.0)	40
26	272	258		63.3	(102.5)	38
25	266	253		62.8	(101.5)	38
24	260	247		62.4	(101.0)	37
23	254	243		62.0	100.0	36
22	248	237		61.5	99.0	35
21	243	231		61.0	98.5	35
20	238	226		60.5	97.8	34
(18)	230	219		–	96.7	33
(16)	222	212		–	95.5	32
(14)	213	203		–	93.9	31
(12)	204	194		–	92.3	29
(10)	196	187			90.7	28
(8)	188	179			89.5	27
(6)	180	171			87.1	26
(4)	173	165			85.5	25
(2)	166	158			83.5	24
(0)	160	152			81.7	24

Appendix table 15 Viscosity conversion

Kinematic viscosity mm²/s	Saybolt SUS (second)		Redwood R (second)		Engler E (degree)
	100 °F	210 °F	50 °C	100 °C	
2	32.6	32.8	30.8	31.2	1.14
3	36.0	36.3	33.3	33.7	1.22
4	39.1	39.4	35.9	36.5	1.31
5	42.3	42.6	38.5	39.1	1.40
6	45.5	45.8	41.1	41.7	1.48
7	48.7	49.0	43.7	44.3	1.56
8	52.0	52.4	46.3	47.0	1.65
9	55.4	55.8	49.1	50.0	1.75
10	58.8	59.2	52.1	52.9	1.84
11	62.3	62.7	55.1	56.0	1.93
12	65.9	66.4	58.2	59.1	2.02
13	69.6	70.1	61.4	62.3	2.12
14	73.4	73.9	64.7	65.6	2.22
15	77.2	77.7	68.0	69.1	2.32
16	81.1	81.7	71.5	72.6	2.43
17	85.1	85.7	75.0	76.1	2.54
18	89.2	89.8	78.6	79.7	2.64
19	93.3	94.0	82.1	83.6	2.76
20	97.5	98.2	85.8	87.4	2.87
21	102	102	89.5	91.3	2.98
22	106	107	93.3	95.1	3.10
23	110	111	97.1	98.9	3.22
24	115	115	101	103	3.34
25	119	120	105	107	3.46
26	123	124	109	111	3.58
27	128	129	112	115	3.70
28	132	133	116	119	3.82
29	137	138	120	123	3.95
30	141	142	124	127	4.07
31	145	146	128	131	4.20
32	150	150	132	135	4.32
33	154	155	136	139	4.45
34	159	160	140	143	4.57

Kinematic viscosity mm²/s	Saybolt SUS (second)		Redwood R (second)		Engler E (degree)
	100 °F	210 °F	50 °C	100 °C	
35	163	164	144	147	4.70
36	168	170	148	151	4.83
37	172	173	153	155	4.96
38	177	178	156	159	5.08
39	181	183	160	164	5.21
40	186	187	164	168	5.34
41	190	192	168	172	5.47
42	195	196	172	176	5.59
43	199	201	176	180	5.72
44	204	205	180	185	5.85
45	208	210	184	189	5.98
46	213	215	188	193	6.11
47	218	219	193	197	6.24
48	222	224	197	202	6.37
49	227	228	201	206	6.50
50	231	233	205	210	6.63
55	254	256	225	231	7.24
60	277	279	245	252	7.90
65	300	302	266	273	8.55
70	323	326	286	294	9.21
75	346	349	306	315	9.89
80	371	373	326	336	10.5
85	394	397	347	357	11.2
90	417	420	367	378	11.8
95	440	443	387	399	12.5
100	464	467	408	420	13.2
120	556	560	490	504	15.8
140	649	653	571	588	18.4
160	742	747	653	672	21.1
180	834	840	734	757	23.7
200	927	933	816	841	26.3
250	1 159	1 167	1 020	1 051	32.9
300	1 391	1 400	1 224	1 241	39.5

Remark 1 mm²/s = 1 cSt (centistokes)

GLOBAL NETWORK
BEARING BUSINESS OPERATIONS

JTEKT CORPORATION NAGOYA HEAD OFFICE
No.7-1, Meieki 4-chome, Nakamura-ku, Nagoya, Aichi 450-8515, JAPAN
TEL : 81-52-527-1900
FAX : 81-52-527-1911

JTEKT CORPORATION OSAKA HEAD OFFICE
No.5-8, Minamisemba 3-chome, Chuo-ku, Osaka 542-8502, JAPAN
TEL : 81-6-6271-8451
FAX : 81-6-6245-7892

Sales & Marketing Headquarters
No.5-8, Minamisemba 3-chome, Chuo-ku, Osaka 542-8502, JAPAN
TEL : 81-6-6245-6087
FAX : 81-6-6244-9007

OFFICES

KOYO CANADA INC.
5324 South Service Road, Burlington, Ontario L7L 5H5, CANADA
TEL : 1-905-681-1121
FAX : 1-905-681-1392

KOYO CORPORATION OF U.S.A.
-Cleveland Office-
29570 Clemens Road, P.O.Box 45028 Westlake, OH 44145, U.S.A.
TEL : 1-440-835-1000
FAX : 1-440-835-9347
-Detroit Office-
47771 Halyard Drive, Plymouth, MI 48170, U.S.A.
TEL : 1-734-454-1500
FAX : 1-734-454-4076

KOYO MEXICANA, S.A. DE C.V.
Rio Nazas No.171, 3er piso, Col. Cuauhtemoc, México, D.F. C.P. 06500, MÉXICO
TEL : 52-55-5207-3860
FAX : 52-55-5207-3873

KOYO LATIN AMERICA, S.A.
Edificio Banco del Pacifico Planta Baja, Calle Aquilino de la Guardia y Calle 52, Panama, REPUBLICA DE PANAMA
TEL : 507-208-5900
FAX : 507-264-2782/507-269-7578

KOYO ROLAMENTOS DO BRASIL LTDA.
Rua Desembargador Eliseu Ghilherme 304, 7-Andar, Paraiso, CEP 04004-30, BRASIL
TEL : 55-11-3887-9173
FAX : 55-11-3887-3039

JTEKT (THAILAND) Co., LTD.
172/1 Moo 12 Tambol Bangwua, Amphur Bangpakong, Chachoengsao 24180, THAILAND
TEL : 66-38-533-310-7
FAX : 66-38-532-776

KOYO SINGAPORE BEARING (PTE.) LTD.
#09-01, C&P Logistics Hub 2, 27, Penjuru Lane , SINGAPORE, 609195
TEL : 65-6274-2200
FAX : 65-6862-1623
-India Branch-
1104, GD-ITL Tower, B-08, NETAJI SUBHASH PLACE, PITAM PURA, DELHI 110034 INDIA
TEL : 91-11-2735-3502～04
91-11-5537-4803～04
FAX : 91-11-2715-3501

PHILIPPINE KOYO BEARING CORPORATION
Rm.504, Comfoods Bldg., Cor. Gil Puyat Ave. and Pasong Tamo, Makati City, PHILIPPINES
TEL : 63-2-817-8881/8901
FAX : 63-2-867-3148

JTEKT KOREA CO., LTD.
Inwoo Building 6F, 539-11, Shinsa-Dong, Kangnam-Ku, Seoul, KOREA
TEL : 82-2-549-7922
FAX : 82-2-549-7923

JTEKT (CHINA) CO., LTD.
Rm.1906, Aetna Tower, 107 Zunyi Road, Shanghai, 200051, CHINA
TEL : 86-21-6237-5280
FAX : 86-21-6237-5277

KOYO (SHANGHAI) CO., LTD.
Rm.1905, Aetna Tower, 107 Zunyi Road, Shanghai, 200051, CHINA
TEL : 86-21-6237-5280
FAX : 86-21-6237-5277

KOYO AUSTRALIA PTY. LTD.
Unit 2, 8 Hill Road , Homebush Bay, NSW 2127, AUSTRALIA
TEL : 61-2-8719-5300
FAX : 61-2-8719-5333

JTEKT CORPORATION EUROPEAN BEARING CENTRAL OFFICE
Markerkant 13-01, 1314 AN Almere, THE NETHERLANDS
TEL : 31-36-5383333
FAX : 31-36-5347212

KOYO KULLAGER SCANDINAVIA A.B.
Johanneslundsvägen 4, 194 61 Upplands Väsby, SWEDEN
TEL : 46-8-594-212-10
FAX : 46-8-594-212-29

KOYO (U.K.) LTD.
Whitehall Avenue, Kingston, Milton Keynes MK10 OAX, UNITED KINGDOM
TEL : 44-1908-289300
FAX : 44-1908-289333

EUROPA-KOYO B.V.
Lekdijk 187, 2967 GJ Langerak, THE NETHERLANDS
TEL : 31-184-606800
FAX : 31-184-602572/606857

KOYO ROMANIA REPRESENTATIVE OFFICE
Str. Frederic Jolliot-Curie, Nr.3, Etaj 1, Ap.2, Sector 5 Bucharest, ROMANIA
TEL : 40-21-410-4170/4182/0984
FAX : 40-21-410-1178

KOYO DEUTSCHLAND GMBH.
Bargkoppelweg 4, D-22145 Hamburg, GERMANY
TEL : 49-40-67-9090-0
FAX : 49-40-67-9203-0

KOYO FRANCE S.A.
8 Rue Guy Moquet, B.P.189 Z.I., 95105 Argenteuil Cedex, FRANCE
TEL : 33-1-3998-4202
FAX : 33-1-3998-4244/4249

KOYO IBERICA, S.L.
Avda.da la Industria, 52-2 izda 28820 Coslada Madrid, SPAIN
TEL : 34-91-329-0818
FAX : 34-91-747-1194

KOYO ITALIA S.R.L.
Via Bronzino 9, 20133 Milano, ITALY
TEL : 39-02-2951-0844
FAX : 39-02-2951-0954

BEARING PLANTS

KOYO CORPORATION OF U.S.A.
(MANUFACTURING DIVISION)
-Orangeburg Plant-
2850 Magnolia Street, Orangeburg, SC 29115, U.S.A.
TEL : 1-803-536-6200
FAX : 1-803-534-0599
-Richland Plant-
1006 Northpoint Blvd., Blythewood, SC 29016, U.S.A.
TEL : 1-803-691-4624/4633
FAX : 1-803-691-4655

KOYO MANUFACTURING (PHILIPPINES) CORP.
Lima Technology Center, Municipality of Malvar, Batangas Province, 4233 PHILIPPINES
TEL : 63-43-981-0088
FAX : 63-43-981-0001

KOYO JICO KOREA CO., LTD
28-12, Yulpo-Ri, Koduc-Myun, Pyung Teak-City, Kyungki-Do, KOREA
TEL : 82-31-668-6381
FAX : 82-31-668-6384

KOYO BEARING DALIAN CO., LTD.
No.II A-2 Dalian Export Processing Zone, 116600, CHINA
TEL : 86-411-8731-0972/0974
FAX : 86-411-8731-0973

WUXI KOYO BEARING CO., LTD.
Wuxi Li Yuan Economic Development Zone, Wuxi, 214072, CHINA
TEL : 86-510-85161901
FAX : 86-510-85161143

DALIAN KOYO WAZHOU AUTOMOBILE BEARING CO., LTD.
No.96, Liaohe East Road, D.D Port, Dalian, 116620, CHINA
TEL : 86-411-8740-7272
FAX : 86-411-8740-7373

KOYO LIOHO (FOSHAN) AUTOMOTIVE PARTS CO., LTD.
No.12, Wusha Section Of Shunpan Road, Daliang Town, Shunde Of Foshan, Guandong, Province, CHINA
(SHUNDE INDUSTRIAL PARK)
TEL : 86-757-22829589
FAX : 86-757-22829586

KOYO AUTOMOTIVE PARTS (WUXI) CO.,LTD.
B6-A New District, Wuxi, 214028, CHINA
TEL : 86-510-8533-0909
FAX : 86-510-8533-0155

KOYO BEARINGS (EUROPE) LTD.
P.O.Box 101, Elmhirst Lane, Dodworth, Barnsley, South Yorkshire, S75 3TA, UNITED KINGDOM
TEL : 44-1226-733200
FAX : 44-1226-204029

KOYO ROMANIA S.A.
1, Tr. Magurele Street, 140003 Alexandria, ROMANIA
TEL : 40-24-731-2605
FAX : 40-24-731-5892

TECHNICAL CENTERS

JTEKT CORPORATION NORTH AMERICAN TECHNICAL CENTER
47771 Halyard Drive, Plymouth, MI 48170, U.S.A.
TEL : 1-734-454-1500
FAX : 1-734-454-4076

JTEKT CORPORATION (CHINA) TECHNICAL CENTER
Rm.1905, Aetna Tower, 107 Zunyi Road, Shanghai, 200051, CHINA
TEL : 86-21-6237-5280
FAX : 86-21-6237-5277

JTEKT CORPORATION EUROPEAN TECHNICAL CENTRE
Markerkant 13-02, 1314 AN Almere, THE NETHERLANDS
TEL : 31-36-5383350
FAX : 31-36-5302656

Value & Technology

JTEKT

CAT. NO. B2007E
Printed in Japan '08.03-1CDS